SUPPLEMENT NO. 11
December 2018

CODE

County of

JONES, GEORGIA

Looseleaf Supplement

This Supplement contains all ordinances deemed advisable to be included at this time through:

Ordinance of October 2, 2018.

See the Code Comparative Table for further information.

Remove Old Pages	*Insert New Pages*
	v
Checklist of up-to-date pages	Checklist of up-to-date pages (following Table of Contents)
SH:1	SH:1, SH:2
CD2:15, CD2:16	CD2:15—CD2:21
CD34:15—CD34:35	CD34:15—CD34:37
CDA:27—CDA:32	CDA:27—CDA:32.2
CDA:39, CDA:40	CDA:39, CDA:40
CDA:51, CDA:52	CDA:51, CDA:52
CDA:59, CDA:60	CDA:59, CDA:60
CDA:67, CDA:68	CDA:67, CDA:68
CDA:87, CDA:88	CDA:87—CDA:88.1
CDA:95—CDA:102	CDA:95—CDA:102.1
CDA:153, CDA:154	CDA:153—CDA:154.1
CCT:5, CCT:6	CCT:5, CCT:6

Insert and maintain this instruction sheet in front of this publication. File removed pages for reference.

Municipal Code Corporation | P.O. Box 2235 Tallahassee, FL 32316
info@municode.com | 800.262.2633
www.municode.com

SUPPLEMENT NO. 10
June 2017

CODE

County of

JONES, GEORGIA

Looseleaf Supplement

This Supplement contains all ordinances deemed advisable to be included at this time through:

Ordinance No. 20174-2o, enacted April 18, 2017.

See the Code Comparative Table for further information.

Remove Old Pages	*Insert New Pages*
Title page	Title page
xiii—xvii	xiii—xvii
Checklist of up-to-date pages	Checklist of up-to-date pages (following Table of Contents)
SH:1	SH:1
CD14:3—CD14:11	CD14:3—CD14:12
CD52:21—CD52:25	CD52:21—CD52:24
CD74:1, CD74:2	CD74:1—CD74:2.1
CD74:7, CD74:8	CD74:7—CD74:8.1
CD74:21	CD74:21—CD74:30
CCT:3—CCT:6	CCT:3—CCT:6
CDi:47—CDi:50	CDi:47—CDi:50.1
CDi:73—CDi:76	CDi:73—CDi:77

Insert and maintain this instruction sheet in front of this publication. File removed pages for reference.

municode

Municipal Code Corporation | P.O. Box 2235 Tallahassee, FL 32316
info@municode.com | 800.262.2633
www.municode.com

SUPPLEMENT NO. 9
June 2016

CODE

County of

JONES, GEORGIA

Looseleaf Supplement

This Supplement contains all ordinances deemed advisable to be included at this time through:

Ordinance No. 201601-2o, enacted February 2, 2016.

See the Code Comparative Table for further information.

Included in the Special Acts is:

Ordinance No. 201511-10, enacted December 1, 2015.

See the Special Acts Comparative Table for further information.

Remove Old Pages	*Insert New Pages*
xiii—xvii	xiii—xvii
Checklist of Up-to-Date Pages	Checklist of Up-to-Date Pages (following Table of Contents)
SH:1	SH:1
SA:1—SA:3	SA:1—SA:3
SA:13—SA:14.1	SA:13—SA:14.4
SACT:3	SACT:3
CD58:1	CD58:1
CD58:3—CD58:7	CD58:3—CD58:8
CDA:1—CDA:4	CDA:1—CDA:4
CDA:53, CDA:54	CDA:53—CDA:54.1
CDA:81, CDA:82	CDA:81—CDA:82.7
	CDB:1—CDB:34
CCT:5, CCT:6	CCT:5, CCT:6
SLT:1—SLT:3	SLT:1—SLT:3
SAi:1—SAi:4	SAi:1—SAi:4
CDi:1, CDi:2	CDi:1, CDi:2
CDi:17, CDi:18	CDi:17—CDi:18.1
CDi:23, CDi:24	CDi:23—CDi:24.1
CDi:35—CDi:40	CDi:35—CDi:40.1
CDi:51, CDi:52	CDi:51—CDi:52.1
CDi:63, CDi:64	CDi:63, CDi:64

Insert and maintain this instruction sheet in front of this publication. File removed pages for reference.

Municipal Code Corporation | P.O. Box 2235 Tallahassee, FL 32316
info@municode.com | 800.262.2633
www.municode.com

SUPPLEMENT NO. 8
June 2015

CODE

County of

JONES, GEORGIA

Looseleaf Supplement

This Supplement contains all ordinances deemed advisable to be included at this time through:

Ordinance No. 201411-1o, enacted December 2, 2014.

See the Code Comparative Table for further information.

Remove Old Pages	*Insert New Pages*
Title page	Title page
xiii—xvii	xiii—xvii
Checklist of Up-to-Date pages	Checklist of Up-to-Date pages (following Table of Contents)
SH:1	SH:1
CD2:1, CD2:2	CD2:1, CD2:2
CD2:15, CD2:16	CD2:15, CD2:16
CD6:1	CD6:1
CD6:4.1—CD6:9	CD6:5—CD6:10
CD18:1—CD18:2.2	CD18:1—CD18:2.1
CD18:9—CD18:22	CD18:9—CD18:11
CD22:7—CD22:9	CD22:7—CD22:9
CD50:1, CD50:2	CD50:1, CD50:2
CD50:13, CD50:14	CD50:13—CD50:15
CD74:1—CD74:21	CD74:1—CD74:21
CDA:131, CDA:132	CDA:131—CDA:132.1
CDA:143—CDA:148	CDA:143—CDA:148
CDA:153—CDA:156	CDA:153—CDA:156
CCT:5, CCT:6	CCT:5, CCT:6
CDi:1—CDi:12	CDi:1—CDi:11
CDi:37—CDi:40	CDi:37—CDi:40
CDi:45, CDi:46	CDi:45, CDi:46
CDi:50.1—CDi:56	CDi:51—CDi:56.1
CDi:69—CDi:76	CDi:69—CDi:76

Insert and maintain this instruction sheet in front of this publication. File removed pages for reference.

Municipal Code Corporation • PO Box 2235 Tallahassee, FL 32316
info@municode.com • 800.262.2633
fax 850.575.8852 • www.municode.com

SUPPLEMENT NO. 7
June 2012

CODE

County of

JONES, GEORGIA

Looseleaf Supplement

This Supplement contains all ordinances deemed advisable to be included at this time through:

Ordinance No. 201203-2o, enacted March 20, 2012.

See the Code Comparative Table for further information.

Remove Old Pages	*Insert New Pages*
xv—xvii	xv—xvii
Checklist of up-to-date pages	Checklist of up-to-date pages (following Table of Contents)
SH:1	SH:1
CD74:1, CD74:2	CD74:1, CD74:2
CD74:3—CD74:21	CD74:3—CD74:21
CDA:1—CDA:4	CDA:1—CDA:4
CDA:5—CDA:157	CDA:5—CDA:164
CCT:5, CCT:6	CCT:5, CCT:6
SLT:3	SLT:3
CDi:16.1—CDi:32	CDi:17—CDi:32.2
CDi:45—CDi:50.1	CDi:45—CDi:50.1
CDi:73—CDi:76	CDi:73—CDi:76

Insert and maintain this instruction sheet in front of this publication. File removed pages for reference.

municode
Municipal Code Corporation • PO Box 2235 Tallahassee, FL 32316
info@municode.com • 800.262.2633
fax 850.575.8852 • www.municode.com

SUPPLEMENT NO. 6
October 2011

CODE

County of

JONES, GEORGIA

Looseleaf Supplement

This Supplement contains all ordinances deemed advisable to be included at this time through:

Ordinance No. 201107-1o, enacted July 19, 2011.

See the Code Comparative Table for further information.

Remove Old Pages	*Insert New Pages*
xiii—xvii	xiii—xvii
Checklist of up-to-date pages	Checklist of up-to-date pages (following Table of Contents) SH:1 (following checklist of up-to-date pages)
CD18:2.1	CD18:2.1, CD18:2.2
CD18:47, CD18:48	CD18:47—CD18:51
CD30:1	CD30:1
CD30:5, CD30:6	CD30:5—CD30.7
CD34:1—CD34:3	CD34:1—CD34:3
CD34:5, CD34:6	CD34:5—CD34:6.2
CD66:1	CD66:1
CD66:3—CD66:5	CD66:3—CD66:5
CD74:1—CD74:20	CD74:1—CD74:21
CCT:5, CCT:6	CCT:5, CCT:6
SLT:1—SLT:3	SLT:1—SLT:3
CDi:9, CDi:10	CDi:9—CDi:10.1
CDi:33—CDi:46	CDi:33—CDi:46
CDi:69—CDi:76	CDi:69—CDi:76

Insert and maintain this instruction sheet in front of this publication. File removed pages for reference.

Municipal Code Corporation
PO Box 2235 Tallahassee, FL 32316
800-262-2633 • Fax: 850-575-8852
Municode.com • info@municode.com

SUPPLEMENT NO. 5
December 2010

CODE

County of

JONES, GEORGIA

Looseleaf Supplement

This Supplement contains all ordinances deemed advisable to be included at this time through:

Ordinance No. 2010-10, enacted September 21, 2010.

See the Code Comparative Table for further information.

Included in the Special Acts is:

Ordinance No. 2009-003, adopted January 5, 2010.

See the Special Acts Comparative Table—Ordinances for further information.

Remove Old Pages	*Insert New Pages*
xiii—xvii	xiii—xvii
Checklist of up-to-date pages	Checklist of up-to-date pages (following Table of Contents)
SA:9, SA:10	SA:9, SA:10
SA:13—SA:14.1	SA:13—SA:14.1
SACT:1, SACT:2	SACT:1, SACT:2
	SACT:3
CD2:3—CD2:8	CD2:3—CD2:8.1
CD6:1	CD6:1
CD6:3, CD6:4	CD6:3—CD6:4.2
CD14:1	CD14:1
CD14:3—CD14:5	CD14:3—CD14:11
CD18:21—CD18:26	CD18:21—CD18:26.1
CD22:1	CD22:1, CD22:2
CD22:3, CD22:4	CD22:3—CD22:9
CD34:1—CD34:3	CD34:1—CD34:3
CD34:15—CD34:34	CD34:15—CD34:35
CD42:1—CD42:18	CD42:1—CD42:21
CD50:3, CD50:4	CD50:3, CD50:4
CD54:1	CD54:1
CD54:3, CD54:4	CD54:3—CD54:5
CD58:1	CD58:1
CD58:4.1—CD58:7	CD58:5—CD58:7
CD74:1—CD74:19	CD74:1—CD74:20

Remove Old Pages	*Insert New Pages*
CDA:1—CDA:139	CDA:1—CDA:157
CCT:3—CCT:5	CCT:3—CCT:6
SLT:1, SLT:2	SLT:1—SLT:3
CDi:3—CDi:6	CDi:3—CDi:6
CDi:9—CDi:16.1	CDi:9—CDi:16.1
CDi:31—CDi:34	CDi:31—CDi:34
CDi:37—CDi:42	CDi:37—CDi:42.1
CDi:47—CDi:50	CDi:47—CDi:50.1
CDi:53—CDi:58	CDi:53—CDi:58.2
CDi:61—CDi:70	CDi:61—CDi:70
CDi:73—CDi:76	CDi:73—CDi:76

Insert and maintain this instruction sheet in front of this publication. File removed pages for reference.

Municipal Code Corporation
PO Box 2235 Tallahassee, FL 32316
800-262-2633 • Fax: 850-575-8852
Municode.com • info@municode.com

SUPPLEMENT NO. 4
March 2009

CODE

County of

JONES, GEORGIA

Looseleaf Supplement

This Supplement contains all ordinances deemed advisable to be included at this time through:

Ordinance No. 200902-1o, enacted February 3, 2009.

See the Code Comparative Table for further information.

Remove old pages	*Insert new pages*
xv—xvii	xv—xvii
Checklist of up-to-date pages	Checklist of up-to-date pages (following Table of Contents)
CD51:1	CD51:1
	CD52:1—CD52:25
	CD53:1
CD58:1—CD58:4	CD58:1—CD58:4.1
CD58:7, CD58:8	CD58:7
CD74:1—CD74:19	CD74:1—CD74:19
CCT:5	CCT:5
CDi:1—CDi:4	CDi:1—CDi:4
CDi:15, CDi:16	CDi:15—CDi:16.1
CDi:33, CDi:34	CDi:33, CDi:34
CDi:37—CDi:40	CDi:37—CDi:40
CDi:47, CDi:48	CDi:47—CDi:48.1
CDi:51—CDi:54	CDi:51—CDi:54.1
CDi:57—CDi:60	CDi:57—CDi:60
CDi:63, CDi:64	CDi:63, CDi:64
CDi:71—CDi:76	CDi:71—CDi:76

Insert and maintain this instruction sheet in front of this publication. File removed pages for reference.

MUNICIPAL CODE CORPORATION
Post Office Box 2235
1700 Capital Circle, S.W.
Tallahassee, FL 32316
(850) 576-3171
1-800-262-CODE
Website: www.municode.com

SUPPLEMENT NO. 3
May 2007

CODE

County of

JONES, GEORGIA

Looseleaf Supplement

This Supplement contains all ordinances deemed advisable to be included at this time through:

Ordinance No. 200702-1o, enacted February 8, 2007.

See the Code Comparative Table for further information.

Remove old pages	*Insert new pages*
xiii, xiv	xiii, xiv
Checklist of up-to-date pages	Checklist of up-to-date pages (following Table of Contents)
CD18:2.1	CD18:2.1
CD18:25—CD18:46	CD18:25—CD18:48
CD26:4.1, CD26:4.2	CD26:4.1, CD26:4.2
CD74:1—CD74:19	CD74:1—CD74:19
CCT:5	CCT:5
CDi:11, CDi:12	CDi:11—CDi:12.1
CDi:37—CDi:42	CDi:37—CDi:42
CDi:69—CDi:77	CDi:69—CDi:76

Insert and maintain this instruction sheet in front of this publication. File removed pages for reference.

MUNICIPAL CODE CORPORATION
Post Office Box 2235
1700 Capital Circle, S.W.
Tallahassee, FL 32316
(850) 576-3171
1-800-262-CODE
Website: www.municode.com

SUPPLEMENT NO. 2
November 2006

CODE

County of

JONES, GEORGIA

Looseleaf Supplement

This Supplement contains all ordinances deemed advisable to be included at this time through:

Ordinance No. 20010-2o, enacted October 3, 2006.

See the Code Comparative Table for further information.

Remove old pages	*Insert new pages*
xiii—xvii	xiii—xvii
Checklist of up-to-date pages	Checklist of up-to-date pages (following Table of Contents)
CD18:1, CD18:2	CD18:1—CD18:2.1
CD18:21, CD18:22	CD18:21—CD18:46
CD26:1—CD26:4	CD26:1—CD26:4.4
CD26:7, CD26:8	CD26:7—CD26:11
CD54:1—CD54:4	CD54:1—CD54:4
CD58:3, CD58:4	CD58:3, CD58:4
CD70:1	CD70:1
CD70:5	CD70:5, CD70:6
CD74:1—CD74:9	CD74:1—CD74:19
CCT:3, CCT:4	CCT:3—CCT:5
SLT:1, SLT:2	SLT:1, SLT:2
CDi:7—CDi:18	CDi:7—CDi:18.2
CDi:33—CDi:56	CDi:33—CDi:56.2
CDi:67—CDi:76	CDi:67—CDi:77

Insert and maintain this instruction sheet in front of this publication. File removed pages for reference.

MUNICIPAL CODE CORPORATION
Post Office Box 2235
1700 Capital Circle, S.W.
Tallahassee, FL 32316
(850) 576-3171
1-800-262-CODE
Website: www.municode.com

SUPPLEMENT NO. 1
October 2004

CODE

County of

JONES, GEORGIA

Looseleaf Supplement

This Supplement contains all ordinances deemed advisable to be included at this time through:

Amendment of August 3, 2004.

See the Code Comparative Table for further information.

Included in the Special Acts is:

Georgia Laws of 2004, page 4552.

See the Special Acts Comparative Table for further information.

Remove old pages	*Insert new pages*
	xi, xii
xiii—xvi	xiii—xvi
	Checklist of up-to-date pages (following Table of Contents)
SA:1, SA:2	SA:1, SA:2
SA:9—SA:14	SA:9—SA:14.1
SACT:1, SACT:2	SACT:1, SACT:2
CD6:1	CD6:1
CD6:5, CD6:6	CD6:5—CD6:6.1
CD34:1—CD34:3	CD34:1—CD34:3
CD34:15—CD34:32	CD34:15—CD34:34
CD58:1	CD58:1
CD58:3—CD58:7	CD58:3—CD58:8
CDA:1, CDA:2	CDA:1, CDA:2
CDA:27, CDA:28	CDA:27—CDA:28.2
CDA:35, CDA:36	CDA:35—CDA:36.2
CDA:45, CDA:46	CDA:45—CDA:46.1
CDA:49, CDA:50	CDA:49—CDA:50.1
CDA:55, CDA:56	CDA:55—CDA:56.1
CDA:81, CDA:82	CDA:81—CDA:82.1
CDA:85—CDA:90	CDA:85—CDA:90.8
CDA:101, CDA:102	CDA:101—CDA:102.1
CDA:109, CDA:110	CDA:109—CDA:110.1
CDA:123—CDA:126	CDA:123—CDA:126
CDA:129, CDA:130	CDA:129—CDA:130.1
CDA:133, CDA:134	CDA:133, CDA:134
CDA:137—CDA:139	CDA:137—CDA:139
CCT:3, CCT:4	CCT:3, CCT:4
SAi:3, SAi:4	SAi:3, SAi:4
SAi:7, SAi:8	SAi:7, SAi:8

Remove old pages	*Insert new pages*
CDi:1—CDi:4	CDi:1—CDi:4
CDi:11—CDi:18	CDi:11—CDi:18
CDi:21, CDi:22	CDi:21, CDi:22
CDi:25—CDi:30	CDi:25—CDi:30
CDi:33—CDi:40	CDi:33—CDi:40
CDi:55, CDi:56	CDi:55, CDi:56
CDi:61—CDi:66	CDi:61—CDi:66
CDi:69, CDi:70	CDi:69, CDi:70

Insert and maintain this instruction sheet in front of this publication. File removed pages for reference.

MUNICIPAL CODE CORPORATION
Post Office Box 2235
1700 Capital Circle, S.W.
Tallahassee, FL 32316
(850) 576-3171
1-800-262-CODE
Website: www.municode.com

THE CODE OF

JONES COUNTY, GEORGIA

Published in 2004 by Order of the Board of Commissioners

Municipal Code Corporation | P.O. Box 2235 Tallahassee, FL 32316
info@municode.com | 800.262.2633
www.municode.com

OFFICIALS

of

JONES COUNTY, GEORGIA

AT THE TIME OF THIS CODIFICATION

G. B. Moore, III, "Butch"
Chairman

Larry Childs — District I
David Gault — District II
Tim S. Day — District II
J. A. Andrews, Jr. "Al" — District III
Commissioners

Frank H. Childs, Jr.
County Attorney

Leila Land
County Clerk / Chief Financial Officer

CURRENT OFFICIALS

of

JONES COUNTY, GEORGIA

Chris Weidner
Chairman

Sam Kitchens — District I
Jonathan Pitts — District II
Tommy Robinson — District III
Daylon Martin — District IV
Commissioners

Frank H. Childs, Jr.
County Attorney

Margie C. Tyson
County Clerk

PREFACE

This Code constitutes a codification of the general and permanent ordinances of Jones County, Georgia.

Source materials used in the preparation of the Code were the ordinances and resolutions adopted by the board of commissioners. The source of each section is included in the history note appearing in parentheses at the end thereof. The absence of such a note indicates that the section is new and was adopted for the first time with the adoption of the Code. By use of the comparative table appearing in the back of this Code, the reader can locate any ordinance or resolution included herein.

The chapters of the Code have been conveniently arranged in alphabetical order, and the various sections within each chapter have been catchlined to facilitate usage. Notes which tie related sections of the Code together and which refer to relevant state law have been included. A table listing the state law citations and setting forth their location within the Code is included at the back of this Code.

Chapter and Section Numbering System

The chapter and section numbering system used in this Code is the same system used in many state and local government codes. Each section number consists of two parts separated by a dash. The figure before the dash refers to the chapter number, and the figure after the dash refers to the position of the section within the chapter. Thus, the second section of chapter 1 is numbered 1-2, and the first section of chapter 6 is 6-1. Under this system, each section is identified with its chapter, and at the same time new sections can be inserted in their proper place by using the decimal system for amendments. For example, if new material consisting of one section that would logically come between sections 6-1 and 6-2 is desired to be added, such new section would be numbered 6-1.5. New articles and new divisions may be included in the same way or, in the case of articles, may be placed at the end of the chapter embracing the subject, and, in the case of divisions, may be placed at the end of the article embracing the subject. The next successive number shall be assigned to the new article or division. New chapters may be included by using one of the reserved chapter numbers. Care should be taken that the alphabetical arrangement of chapters is maintained when including new chapters.

Page Numbering System

The page numbering system used in this Code is a prefix system. The letters to the left of the colon are an abbreviation which represents a certain portion of the volume. The number to the right of the colon represents the number of the page in that portion. In the case of a chapter of the Code, the number to the

left of the colon indicates the number of the chapter. In the case of an appendix to the Code, the letter immediately to the left of the colon indicates the letter of the appendix. The following are typical parts of codes of ordinances, which may or may not appear in this Code at this time, and their corresponding prefixes:

SPECIAL ACTS	SA:1
SPECIAL ACTS COMPARATIVE TABLE	SACT:1
CODE	CD1:1
CODE APPENDIX	CDA:1
CODE COMPARATIVE TABLE	CCT:1
STATE LAW REFERENCE TABLE	SLT:1
SPECIAL ACTS INDEX	SAi:1
CODE INDEX	CDi:1

Indexes

The indexes have been prepared with the greatest of care. Each particular item has been placed under several headings, some of which are couched in lay phraseology, others in legal terminology, and still others in language generally used by local government officials and employees. There are numerous cross references within the indexes themselves which stand as guideposts to direct the user to the particular item in which the user is interested.

Looseleaf Supplements

A special feature of this publication is the looseleaf system of binding and supplemental servicing of the publication. With this system, the publication will be kept up-to-date. Subsequent amendatory legislation will be properly edited, and the affected page or pages will be reprinted. These new pages will be distributed to holders of copies of the publication, with instructions for the manner of inserting the new pages and deleting the obsolete pages.

Keeping this publication up-to-date at all times will depend largely upon the holder of the publication. As revised pages are received, it will then become the responsibility of the holder to have the amendments inserted according to the attached instructions. It is strongly recommended by the publisher that all such amendments be inserted immediately upon receipt to avoid misplacing them and, in addition, that all deleted pages be saved and filed for historical reference purposes.

Acknowledgments

This publication was under the direct supervision of Ronald K. McLaughlin, Code Attorney, and Brenda Harrison, Editor, of the Municipal Code Corporation, Tallahassee, Florida. Credit is gratefully given to the other members of the publisher's staff for their sincere interest and able assistance throughout the project.

The publisher is most grateful to Clay Washburn, Administrator, and Frank H. Childs, Jr., Attorney at Law, for their cooperation and assistance during the progress of the work on this publication. It is hoped that their efforts and those of the publisher have resulted in a Code of Ordinances which will make the active law of the county readily accessible to all citizens and which will be a valuable tool in the day-to-day administration of the county's affairs.

Copyright

All editorial enhancements of this Code are copyrighted by Municipal Code Corporation and Jones County, Georgia. Editorial enhancements include, but are not limited to: organization; table of contents; section catchlines; prechapter section analyses; editor's notes; cross references; state law references; numbering system; code comparative table; state law reference table; and index. Such material may not be used or reproduced for commercial purposes without the express written consent of Municipal Code Corporation and Jones County, Georgia.

© Copyrighted material.

Municipal Code Corporation and Jones County, Georgia. 2004.

AN ORDINANCE ADOPTING AND ENACTING A NEW CODE FOR JONES COUNTY, GEORGIA; PROVIDING FOR THE REPEAL OF CERTAIN ORDINANCES NOT INCLUDED THEREIN; PROVIDING A PENALTY FOR THE VIOLATION THEREOF; PROVIDING FOR THE MANNER OF AMENDING SUCH CODE; AND PROVIDING WHEN SUCH CODE AND THIS ORDINANCE SHALL BECOME EFFECTIVE.

BE IT ORDAINED BY THE BOARD OF COMMISSIONERS:

Section 1. The Code entitled "The Code of Jones County, Georgia," published by Municipal Code Corporation, consisting of chapters 1 through 74, each inclusive, is adopted.

Section 2. All ordinances of a general and permanent nature enacted on or before July 2, 2002, and not included in the Code or recognized and continued in force by reference therein, are repealed.

Section 3. The repeal provided for in section 2 hereof shall not be construed to revive any ordinance or part thereof that has been repealed by a subsequent ordinance that is repealed by this ordinance.

Section 4. Unless another penalty is expressly provided, every person convicted of a violation of any provision of the Code or any ordinance, rule or regulation adopted or issued in pursuance thereof shall be punished by a fine not exceeding $1,000, imprisonment not exceeding 180 days, or both such fine and imprisonment. Each act of violation and each day upon which any such violation shall continue or occur shall constitute a separate offense. The penalty provided by this section, unless another penalty is expressly provided, shall apply to the amendment of any Code section, whether or not such penalty is reenacted in the amendatory ordinance. In addition to the penalty prescribed above, the county may pursue other remedies such as abatement of nuisances, injunctive relief and revocation of licenses or permits.

Section 5. Additions or amendments to the Code when passed in such form as to indicate the intention of the board of commissioners to make the same a part of the Code shall be deemed to be incorporated in the Code, so that reference to the Code includes the additions and amendments.

Section 6. Ordinances adopted after July 2, 2002, that amend or refer to ordinances that have been codified in the Code shall be construed as if they amend or refer to like provisions of the Code.

Section 7. This ordinance shall before [become] effective March 2, 2004.

Passed and Adopted by the Jones County Board of Commissioners this 2nd day of March, 2004.

/s/ By: G.B. Moore, III

Chairman

ATTEST:

/s/ Leila Land

County Clerk

TABLE OF CONTENTS

	Page
Officials of the County at the Time of this Codification	iii
Current Officials (Reserved)	v
Preface	vii
Adopting Ordinance	xi
Checklist of Up-to-Date Pages	[1]
Supplement History Table	SH:1

PART I

SPECIAL ACTS

Special Acts	SA:1
Art. I. Board of Commissioners	SA:5
Art. II. Officers and Employees	SA:14.3
Div. 1. Sheriff	SA:14.3
Art. III. Boards and Authorities	SA:16
Div. 1. Board of Education	SA:16
Div. 2. Board of Elections and Registration	SA:20
Art. IV. Judiciary	SA:23
Div. 1. Generally	SA:23
Div. 2. Superior Court	SA:23
Div. 3. Superior Court Clerk	SA:24
Div. 4. Magistrate Court	SA:27
Art. V. Taxation	SA:28
Div. 1. Tax Commissioner	SA:28
Div. 2. Homestead Exemptions	SA:30
Subdiv. 1. Low Income Seniors	SA:31
Subdiv. 2. Primarily Occupied by Owner as a Residence in Homestead	SA:32
Special Acts Comparative Table—Georgia Laws	SACT:1
Special Acts Comparative Table—Ordinances	SACT:3

PART II

CODE OF ORDINANCES

Chapter

1. General Provisions	CD1:1
2. Administration	CD2:1
Art. I. In General	CD2:3
Art. II. Board of Commissioners	CD2:3
Div. 1. Generally	CD2:3

Chapter	Page
Div. 2. Parliamentary Procedure	CD2:9
Div. 3. Legislation	CD2:14
Art. III. Officers and Employees	CD2:16
Art. IV. Purchases	CD2:16
3—5. Reserved	CD3:1
6. Alcoholic Beverages	CD6:1
Art. I. In General	CD6:3
Art. II. Beer and Wine	CD6:5
Div. 1. Generally	CD6:5
Div. 2. License	CD6:7
7—9. Reserved	CD7:1
10. Amusements and Entertainments	CD10:1
Art. I. In General	CD10:3
Art. II. Adult Entertainment Establishments	CD10:3
11—13. Reserved	CD11:1
14. Animals	CD14:1
15—17. Reserved	CD15:1
18. Buildings, Construction and Related Activities	CD18:1
Art. I. In General	CD18:3
Art. II. Construction Codes	CD18:3
Art. III. Permits and Inspections	CD18:5
Art. IV. Flow-Rate Restrictions on Plumbing Fixtures	CD18:7
Art. V. Reserved	CD18:10
Art. VI. Unsafe Buildings	CD18:10
Art. VII. Stormwater Management	CD18:26
Div. 1. Generally	CD18:26
Div. 2. Permit Procedures and Requirements	CD18:32
Div. 3. Post-Development Stormwater Management Performance Criteria	CD18:41
Div. 4. Construction Inspections of Post-Development Stormwater Management System	CD18:44
Div. 5. Ongoing Inspection and Maintenance of Stormwater Facilities and Practices	CD18:44
Div. 6. Violations, Enforcement and Penalties	CD18:46
Art. VIII. Minimum Health and Safety Standards for Pre-Owned Manufactured Homes	CD18:48
19—21. Reserved	CD19:1
22. Businesses and Business Regulations	CD22:1
Art. I. In General	CD22:3
Art. II. Pawnbrokers	CD22:3
Div. 1. Generally	CD22:3
Div. 2. License	CD22:4
Art. III. Occupation Taxes and Regulatory Fees	CD22:4
23—25. Reserved	CD23:1

Chapter	Page
26. Civil Emergencies	CD26:1
Art. I. In General	CD26:3
Art. II. Emergency Management	CD26:4.2
Div. 1. Generally	CD26:4.2
Div. 2. Emergency Authority	CD26:4.4
Div. 3. Emergency Management Agency	CD26:5
Art. III. Registration of Building and Repair Services During a State of Emergency	CD26:8
27—29. Reserved	CD27:1
30. Emergency Services	CD30:1
Art. I. In General	CD30:3
Art. II. Identification of Residences	CD30:3
Art. III. 911 Emergency Answering Service	CD30:3
31—33. Reserved	CD31:1
34. Environment	CD34:1
Art. I. In General	CD34:5
Art. II. Noise Control	CD34:6
Art. III. Nuisances	CD34:9
Div. 1. Generally	CD34:9
Div. 2. Vegetation	CD34:12
Div. 3. Mosquito Control	CD34:14
Art. IV. Soil Erosion and Sedimentation Control	CD34:16
Div. 1. Generally	CD34:16
Div. 2. Permit Procedures	CD34:27
Div. 3. Minimum Requirements	CD34:31
35—37. Reserved	CD35:1
38. Fire Prevention and Protection	CD38:1
Art. I. In General	CD38:3
Art. II. Volunteer Fire Department	CD38:3
39—41. Reserved	CD39:1
42. Floods	CD42:1
Art. I. In General	CD42:3
Art. II. Flood Damage Prevention	CD42:3
Div. 1. Generally	CD42:3
Div. 2. Administration	CD42:11
Div. 3. Provisions for Flood Hazard Reduction	CD42:14
43—45. Reserved	CD43:1
46. Health and Sanitation	CD46:1
Art. I. In General	CD46:3
Art. II. State Rules, Regulations	CD46:3
47—49. Reserved	CD47:1
50. Historic Preservation	CD50:1
Art. I. In General	CD50:3

Chapter	Page
Art. II. Historic Preservation Commission	CD50:4
Art. III. Designation of Historic Districts and Landmarks	CD50:7
Art. IV. Application for Certificates of Appropriateness	CD50:10
Art. V. Demolition or Relocation Applications	CD50:14
51. Reserved	CD51:1
52. Impact Fees	CD52:1
Art. I. In General	CD52:3
Art. II. Development Impact Fee Ordinance	CD52:3
52. Reserved	CD52:1
54. Offenses and Miscellaneous Provisions	CD54:1
55—57. Reserved	CD55:1
58. Roads	CD58:1
Art. I. In General	CD58:3
Art. II. Driveway Installation Policy	CD58:3
Art. III. Roads and Rights-of-Way Usage	CD58:4
Art. IV. Reserved	CD58:8
59—61. Reserved	CD59:1
62. Solid Waste	CD62:1
Art. I. In General	CD62:3
Art. II. Solid Waste and Scrap Tire Management	CD62:3
63—65. Reserved	CD63:1
66. Taxation	CD66:1
Art. I. In General	CD66:3
Art. II. Board of Tax Assessors	CD66:4
Art. III. Financial Institutions	CD66:4
Art. IV. Insurers	CD66:5
67—69. Reserved	CD67:1
70. Traffic and Vehicles	CD70:1
Art. I. In General	CD70:3
Art. II. Operation of Vehicles	CD70:3
71—73. Reserved	CD71:1
74. Water and Sewers	CD74:1
Art. I. In General	CD74:3
Art. II. Water	CD74:3
Art. III. Sewers	CD74:20
Art. IV. Illicit Discharge and Illegal Connection	CD74:21
Div. 1. General Provisions	CD74:21
Div. 2. Definitions	CD74:22
Div. 3. Prohibitions	CD74:24

Chapter Page

Div. 4. Compliance, Access, Inspection and Notification CD74:26
Div. 5. Violations, Enforcement and Penalties CD74:27

Appendix

A. Comprehensive Land Development CDA:1
Art. I. Purpose and Enactment CDA:5
Art. II. Short Title CDA:5
Art. III. Definitions of Terms Used in this Resolution CDA:5
Art. IV. Establishment of Districts CDA:12
Art. V. Application of Regulations CDA:15
Art. VI. General Provisions CDA:16
Art. VII. Use Requirements by District CDA:26
Art. VIII. Other Requirements by Districts CDA:49
Art. IX. Special Provisions CDA:83
Art. X. Exceptions and Modifications CDA:108
Art. XI. Zoning Administration CDA:113
Art. XII. Procedures for Subdivision Plat Approval . . . CDA:127
Art. XIII. General Requirements and Minimum Standards of Design for the Subdivision of Land CDA:137
Art. XIV. Required Subdivision Improvements CDA:141
Art. XV. Procedures for Requesting an Amendment to the Comprehensive Land Development Resolution CDA:156
Art. XVI. Enforcement and Remedies CDA:162
Art. XVII. Legal Status Provisions CDA:163

B. Design Guidelines Manual—Bypass Design Overlay District CDB:1

Code Comparative Table—Ordinances CCT:1

State Law Reference Table SLT:1

Special Acts Index SAi:1

Code Index CDi:1

Checklist of Up-to-Date Pages

(This checklist will be updated with the printing of each Supplement)

From our experience in publishing Looseleaf Supplements on a page-for-page substitution basis, it has become evident that through usage and supplementation many pages can be inserted and removed in error.

The following listing is included in this Code as a ready guide for the user to determine whether the Code volume properly reflects the latest printing of each page.

In the first column all page numbers are listed in sequence. The second column reflects the latest printing of the pages as they should appear in an up-to-date volume. The letters "OC" indicate the pages have not been reprinted in the Supplement Service and appear as published for the original Code. When a page has been reprinted or printed in the Supplement Service, this column reflects the identification number or Supplement Number printed on the bottom of the page.

In addition to assisting existing holders of the Code, this list may be used in compiling an up-to-date copy from the original Code and subsequent Supplements.

Page No.	Supp. No.	Page No.	Supp. No.
Title page	10	SA:19, SA:20	OC
iii	OC	SA:21, SA:22	OC
vii, viii	OC	SA:23, SA:24	OC
v	11	SA:25, SA:26	OC
ix	OC	SA:27, SA:28	OC
xi, xii	1	SA:29, SA:30	OC
xiii, xiv	10	SA:31, SA:32	OC
xv, xvi	10	SA:33	OC
xvii	10	SACT:1, SACT:2	5
SH:1, SH:2	11	SACT:3	9
SA:1, SA:2	9	CD1:1	OC
SA:3	9	CD1:3, CD1:4	OC
SA:5, SA:6	OC	CD1:5, CD1:6	OC
SA:7, SA:8	OC	CD1:7, CD1:8	OC
SA:9, SA:10	5	CD1:9, CD1:10	OC
SA:11, SA:12	1	CD1:11, CD1:12	OC
SA:13, SA:14	9	CD2:1, CD2:2	8
SA:14.1, SA:14.2	9	CD2:3, CD2:4	5
SA:14.3, SA:14.4	9	CD2:5, CD2:6	5
SA:15, SA:16	OC	CD2:7, CD2:8	5
SA:17, SA:18	OC	CD2:8.1	5

Page No.	Supp. No.	Page No.	Supp. No.
CD2:9, CD2:10	OC	CD18:25, CD18:26	5
CD2:11, CD2:12	OC	CD18:26.1	5
CD2:13, CD2:14	OC	CD18:27, CD18:28	3
CD2:15, CD2:16	11	CD18:29, CD18:30	3
CD2:17, CD2:18	11	CD18:31, CD18:32	3
CD2:19, CD2:20	11	CD18:33, CD18:34	3
CD2:21	11	CD18:35, CD18:36	3
CD3:1	OC	CD18:37, CD18:38	3
CD6:1	8	CD18:39, CD18:40	3
CD6:3, CD6:4	5	CD18:41, CD18:42	3
CD6:5, CD6:6	8	CD18:43, CD18:44	3
CD6:7, CD6:8	8	CD18:45, CD18:46	3
CD6:9, CD6:10	8	CD18:47, CD18:48	6
CD7:1	OC	CD18:49, CD18:50	6
CD10:1	OC	CD18:51	6
CD10:3, CD10:4	OC	CD19:1	OC
CD10:5, CD10:6	OC	CD22:1, CD22:2	5
CD10:7, CD10:8	OC	CD22:3, CD22:4	5
CD10:9, CD10:10	OC	CD22:5, CD22:6	5
CD10:11, CD10:12	OC	CD22:7, CD22:8	8
CD10:13, CD10:14	OC	CD22:9	8
CD10:15	OC	CD23:1	OC
CD11:1	OC	CD26:1, CD26:2	2
CD14:1	5	CD26:3, CD26:4	2
CD14:3, CD14:4	10	CD26:4.1, CD26:4.2	3
CD14:5, CD14:6	10	CD26:4.3, CD26:4.4	2
CD14:7, CD14:8	10	CD26:5, CD26:6	OC
CD14:9, CD14:10	10	CD26:7, CD26:8	2
CD14:11, CD14:12	10	CD26:9, CD26:10	2
CD15:1	OC	CD26:11	2
CD18:1, CD18:2	8	CD27:1	OC
CD18:2.1	8	CD30:1	6
CD18:3, CD18:4	OC	CD30:3, CD30:4	OC
CD18:5, CD18:6	OC	CD30:5, CD30:6	6
CD18:7, CD18:8	OC	CD30.7	6
CD18:9, CD18:10	8	CD31:1	OC
CD18:11	8	CD34:1, CD34:2	6
CD18:23, CD18:24	5	CD34:3	6

Page No.	Supp. No.	Page No.	Supp. No.
CD34:5, CD34:6	6	CD50:3, CD50:4	5
CD34:6.1, CD34:6.2	6	CD50:5, CD50:6	OC
CD34:7, CD34:8	OC	CD50:7, CD50:8	OC
CD34:9, CD34:10	OC	CD50:9, CD50:10	OC
CD34:11, CD34:12	OC	CD50:11, CD50:12	OC
CD34:13, CD34:14	OC	CD50:13, CD50:14	8
CD34:15, CD34:16	11	CD50:15	8
CD34:17, CD34:18	11	CD51:1	4
CD34:19, CD34:20	11	CD52:1	4
CD34:21, CD34:22	11	CD52:3, CD52:4	4
CD34:23, CD34:24	11	CD52:5, CD52:6	4
CD34:25, CD34:26	11	CD52:7, CD52:8	4
CD34:27, CD34:28	11	CD52:9, CD52:10	4
CD34:29, CD34:30	11	CD52:11, CD52:12	4
CD34:31, CD34:32	11	CD52:13, CD52:14	4
CD34:33, CD34:34	11	CD52:15, CD52:16	4
CD34:35, CD34:36	11	CD52:17, CD52:18	4
CD34:37	11	CD52:19, CD52:20	4
CD35:1	OC	CD52:21, CD52:22	10
CD38:1	OC	CD52:23, CD52:24	10
CD38:3	OC	CD53:1	4
CD39:1	OC	CD54:1	5
CD42:1, CD42:2	5	CD54:3, CD54:4	5
CD42:3, CD42:4	5	CD54:5	5
CD42:5, CD42:6	5	CD55:1	OC
CD42:7, CD42:8	5	CD58:1	9
CD42:9, CD42:10	5	CD58:3, CD58:4	9
CD42:11, CD42:12	5	CD58:5, CD58:6	9
CD42:13, CD42:14	5	CD58:7, CD58:8	9
CD42:15, CD42:16	5	CD59:1	OC
CD42:17, CD42:18	5	CD62:1	OC
CD42:19, CD42:20	5	CD62:3, CD62:4	OC
CD42:21	5	CD62:5, CD62:6	OC
CD43:1	OC	CD62:7, CD62:8	OC
CD46:1	OC	CD62:9, CD62:10	OC
CD46:3	OC	CD62:11, CD62:12	OC
CD47:1	OC	CD62:13, CD62:14	OC
CD50:1, CD50:2	8	CD63:1	OC

Page No.	Supp. No.	Page No.	Supp. No.
CD66:1	6	CDA:27, CDA:28	11
CD66:3, CD66:4	6	CDA:29, CDA:30	11
CD66:5	6	CDA:31, CDA:32	11
CD67:1	OC	CDA:32.1, CDA:32.2	11
CD70:1	2	CDA:33, CDA:34	7
CD70:3, CD70:4	OC	CDA:35, CDA:36	7
CD70:5, CD70:6	2	CDA:37, CDA:38	7
CD71:1	OC	CDA:39, CDA:40	11
CD74:1, CD74:2	10	CDA:41, CDA:42	7
CD74:2.1	10	CDA:43, CDA:44	7
CD74:3, CD74:4	8	CDA:45, CDA:46	7
CD74:5, CD74:6	8	CDA:47, CDA:48	7
CD74:7, CD74:8	10	CDA:49, CDA:50	7
CD74:8.1	10	CDA:51, CDA:52	11
CD74:9, CD74:10	8	CDA:53, CDA:54	9
CD74:11, CD74:12	8	CDA:54.1	9
CD74:13, CD74:14	8	CDA:55, CDA:56	7
CD74:15, CD74:16	8	CDA:57, CDA:58	7
CD74:17, CD74:18	8	CDA:59, CDA:60	11
CD74:19, CD74:20	8	CDA:61, CDA:62	7
CD74:21, CD74:22	10	CDA:63, CDA:64	7
CD74:23, CD74:24	10	CDA:65, CDA:66	7
CD74:25, CD74:26	10	CDA:67, CDA:68	11
CD74:27, CD74:28	10	CDA:69, CDA:70	7
CD74:29, CD74:30	10	CDA:71, CDA:72	7
CDA:1, CDA:2	9	CDA:73, CDA:74	7
CDA:3, CDA:4	9	CDA:75, CDA:76	7
CDA:5, CDA:6	7	CDA:77, CDA:78	7
CDA:7, CDA:8	7	CDA:79, CDA:80	7
CDA:9, CDA:10	7	CDA:81, CDA:82	9
CDA:11, CDA:12	7	CDA:82.1, CDA:82.2	9
CDA:13, CDA:14	7	CDA:82.3, CDA:82.4	9
CDA:15, CDA:16	7	CDA:82.5, CDA:82.6	9
CDA:17, CDA:18	7	CDA:82.7	9
CDA:19, CDA:20	7	CDA:83, CDA:84	7
CDA:21, CDA:22	7	CDA:85, CDA:86	7
CDA:23, CDA:24	7	CDA:87, CDA:88	11
CDA:25, CDA:26	7	CDA:88.1	11

Page No.	Supp. No.	Page No.	Supp. No.
CDA:89, CDA:90	7	CDA:159, CDA:160	7
CDA:91, CDA:92	7	CDA:161, CDA:162	7
CDA:93, CDA:94	7	CDA:163, CDA:164	7
CDA:95, CDA:96	11	CDB:1, CDB:2	9
CDA:97, CDA:98	11	CDB:3, CDB:4	9
CDA:99, CDA:100	11	CDB:5, CDB:6	9
CDA:101, CDA:102	11	CDB:7, CDB:8	9
CDA:102.1	11	CDB:9, CDB:10	9
CDA:103, CDA:104	7	CDB:11, CDB:12	9
CDA:105, CDA:106	7	CDB:13, CDB:14	9
CDA:107, CDA:108	7	CDB:15, CDB:16	9
CDA:109, CDA:110	7	CDB:17, CDB:18	9
CDA:111, CDA:112	7	CDB:19, CDB:20	9
CDA:113, CDA:114	7	CDB:21, CDB:22	9
CDA:115, CDA:116	7	CDB:23, CDB:24	9
CDA:117, CDA:118	7	CDB:25, CDB:26	9
CDA:119, CDA:120	7	CDB:27, CDB:28	9
CDA:121, CDA:122	7	CDB:29, CDB:30	9
CDA:123, CDA:124	7	CDB:31, CDB:32	9
CDA:125, CDA:126	7	CDB:33, CDB:34	9
CDA:127, CDA:128	7	CCT:1, CCT:2	OC
CDA:129, CDA:130	7	CCT:3, CCT:4	10
CDA:131, CDA:132	8	CCT:5, CCT:6	11
CDA:132.1	8	SLT:1, SLT:2	9
CDA:133, CDA:134	7	SLT:3	9
CDA:135, CDA:136	7	SAi:1, SAi:2	9
CDA:137, CDA:138	7	SAi:3, SAi:4	9
CDA:139, CDA:140	7	SAi:5, SAi:6	OC
CDA:141, CDA:142	7	SAi:7, SAi:8	1
CDA:143, CDA:144	8	SAi:9, SAi:10	OC
CDA:145, CDA:146	8	CDi:1, CDi:2	9
CDA:147, CDA:148	8	CDi:3, CDi:4	8
CDA:149, CDA:150	7	CDi:5, CDi:6	8
CDA:151, CDA:152	7	CDi:7, CDi:8	8
CDA:153, CDA:154	11	CDi:9, CDi:10	8
CDA:154.1	11	CDi:11	8
CDA:155, CDA:156	8	CDi:13, CDi:14	5
CDA:157, CDA:158	7	CDi:15, CDi:16	5

Page No.	Supp. No.
CDi:17, CDi:18	9
CDi:18.1	9
CDi:19, CDi:20	7
CDi:21, CDi:22	7
CDi:23, CDi:24	9
CDi:24.1	9
CDi:25, CDi:26	7
CDi:27, CDi:28	7
CDi:29, CDi:30	7
CDi:31, CDi:32	7
CDi:32.1, CDi:32.2	7
CDi:33, CDi:34	6
CDi:35, CDi:36	9
CDi:37, CDi:38	9
CDi:39, CDi:40	9
CDi:40.1	9
CDi:41, CDi:42	6
CDi:43, CDi:44	6
CDi:45, CDi:46	8
CDi:47, CDi:48	10
CDi:49, CDi:50	10
CDi:50.1	10
CDi:51, CDi:52	9
CDi:52.1	9
CDi:53, CDi:54	8
CDi:55, CDi:56	8
CDi:56.1	8
CDi:57, CDi:58	5
CDi:58.1, CDi:58.2	5
CDi:59, CDi:60	4
CDi:61, CDi:62	5
CDi:63, CDi:64	9
CDi:65, CDi:66	5
CDi:67, CDi:68	5
CDi:69, CDi:70	8
CDi:71, CDi:72	8
CDi:73, CDi:74	10
CDi:75, CDi:76	10
CDi:77	10

SUPPLEMENT HISTORY TABLE

The table below allows users of this Code to quickly and accurately determine what ordinances have been considered for codification in each supplement. Ordinances that are of a general and permanent nature are codified in the Code Book and are considered "Included." Ordinances that are not of a general and permanent nature are not codified in the Code Book and are considered "Omitted."

By adding to this table with each supplement, users of this Code of Ordinances will be able to gain a more complete picture of the Code's historical evolution.

Ordinance Number	Date Adopted	Included/ Omitted	Supplement Number
2010-11	12-10-2010	Included	6
2011-03R	2-15-2011	Included	6
2011-05	5-10-2011	Included	6
201106-1o	6-21-2011	Included	6
201107-1o	7-19-2011	Included	6
2012-001	2-21-2012	Included	7
201202-1o	2-21-2012	Included	7
201203-2o	3-20-2012	Included	7
2012-001	9-18-2012	Included	8
	4- 2-2013(Min.)	Included	8
201306-1o	7- 1-2013	Included	8
2013-001	8- 6-2013	Included	8
2013-002	8-20-2013	Included	8
	1- 7-2014(Min.)	Included	8
2014-11-20	11-18-2014	Included	8
201411-1o	12- 2-2014	Included	8
201506-1o	6-16-2016	Included	9
201511-10	12- 1-2015	Included	9
201601-1o	1- 5-2016	Included	9
201601-2o	1- 5-2016	Included	9
201601-2o	2- 2-2016(Min)	Included	9
200603-2o	3- 7-2006	Included	10
20173-1o	3-21-2017	Included	10
20174-1o	4-18-2017	Included	10
20174-2o	4-18-2017	Included	10
Ord. of	7- 2-2013	Included	11
Ord. of	1- 7-2014	Included	11
Ord. of	3- 4-2014	Included	11
Ord. of	9- 4-2014	Included	11
Ord. of	8- 4-2015	Included	11
201711-1o	11-21-2017	Included	11

Ordinance Number	Date Adopted	Included/ Omitted	Supplement Number
201801-1o	1-16-2018	Included	11
Ord. of	6- 5-2018	Included	11
Ord. of	9- 4-2018	Included	11
Ord. of	10- 2-2018	Included	11

PART I

SPECIAL ACTS*

Article I. Board of Commissioners

Sec. 1. Board created.
Sec. 2. Powers, etc.
Sec. 3. Members; qualifications.
Sec. 4. [Members and districts.]
Sec. 5. Oath.
Sec. 6. [Vice-chairman.]
Sec. 7. [Vacancy in office of vice-chairman.]
Sec. 8. [Compensation.]
Sec. 9. [Fiscal affairs and meetings of the board.]
Sec. 10. [Clerk, compensation payment for duties of office.]
Sec. 11. County administrator.
Sec. 12. Audit.
Sec. 13. County attorney.
Sec. 14. Chairman.
Sec. 15. [Purchases.]
Sec. 15.(a). [Surplus property.]
Sec. 15A. [Lease of property.]
Sec. 15(B). [Purchasing card and credit card for county elected officials.]
Sec. 16. [Notice of disbursements; reports of salaries.]
Sec. 17. [Checks to be signed.]

Article II. Officers and Employees

Division 1. Sheriff

Sec. 1. Salary basis.
Sec. 2. [Annual salary; cost-of-living increase.]
Sec. 3. Fees.
Sec. 4. [Power and authority to appoint personnel.]
Sec. 5. Operating expenses.
Sec. 6. Automobiles.

Article III. Boards and Authorities

Division 1. Board of Education

Sec. 1. [Members.]

***Editor's note—**This part is a compilation of local legislation enacted by the Georgia General Assembly which was deemed advisable to print. Enacting, repealer, severability and other formal language have been deleted from each act printed herein. Obvious misspellings have been corrected without notation. For stylistic purposes, a uniform system of headings, catchlines, citations to state statutes and expression of numbers in text as appears in the Code of Ordinances has been used. Additions made for clarity are indicated by brackets.

Sec. 2. [Elections; districts.]
Sec. 3. [Election.]
Sec. 4. [Vacancy.]
Sec. 5. [Compensation; reinbursement.]

Division 2. Board of Elections and Registration

Sec. 1. [Creation of board.]
Sec. 2. [Members.]
Sec. 3. [Office.]
Sec. 4. [Appointment.]
Sec. 5. [Term.]
Sec. 6. [Vacancy.]
Sec. 7. [Oath.]
Sec. 8. [Responsibilities.]
Sec. 9. [Municipal contracts.]
Sec. 10. [Compensation.]
Sec. 11. [Chairperson.]
Sec. 12. [Offices, supplies, etc.]
Sec. 13. [Board of registrars abolished.]

Article IV. Judiciary

Division 1. Generally

Sec. 1. [State librarian to furnish reports.]

Division 2. Superior Court

Sec. 1. City court abolished.
Sec. 2. Pending business and records transferred to Jones Superior Court.
Sec. 3. Costs to be paid into treasury of Jones County.

Division 3. Superior Court Clerk

Sec. 1. [Compensation abolished; annual salary prescribed.]
Sec. 2. [Annual salary.]
Sec. 3. [Collection of fees, etc.]
Sec. 4. [Authority.]
Sec. 5. [Operating expenses.]

Division 4. Magistrate Court

[Sec. 1. Reserved.]
Sec. 2. [Chief magistrate.]
Sec. 3. [Vacancy.]
Sec. 4. [Annual salary.]
Sec. 5. [Costs and expenses.]
Sec. 6. [Validity of Act.]

Article V. Taxation

Division 1. Tax Commissioner

Sec. 1. [Combining of offices.]
Sec. 2. [Election and term.]
Sec. 3. [Oath.]
Sec. 4. [Taxes due and payable.]
Sec. 5. [Annual salary.]
Sec. 6. [Collection of fees, etc.]
Sec. 7. [Authority to employ.]
Sec. 8. [Operating expenses.]

Division 2. Homestead Exemptions

Subdivision I. Low Income Seniors

Sec. 1. [Granting of exemptions.]
Sec. 2. [In lieu of county ad valorem taxation.]
Sec. 3. [Taxes levied.]
Sec. 4. [Eligibility.]
Sec. 5. [Value of residence.]

Subdivision II. Primarily Occupied by Owner as A Residence in Homestead

Sec. 1. [Authorization.]
Sec. 2. [Definition.]
Sec. 3. [Exemption amounts.]
Sec. 4. [Notification of ineligibility.]

ARTICLE I. BOARD OF COMMISSIONERS*

Section 1. Board created.

The affairs of Jones County, Georgia, hereinafter called "the county," shall be administered by a board of commissioners of Jones County, hereinafter called "the board," which offices are hereby created and shall become effective in the manner and at the time hereinafter stated.

Section 2. Powers, etc.

The board of commissioners of Jones County shall have such control of the county affairs as is now conferred by law, and all the powers, rights, duties, liabilities, responsibilities and prohibitions which were previously conferred by law upon the board of commissioners of Jones County, and which are not in conflict with this Act, are hereby expressly preserved and shall devolve upon and shall be exercised by the board of commissioners of Jones County herein created. Said powers, rights, duties, liabilities, responsibilities and prohibitions shall be in addition to and supplemental of all such authorities and liabilities as may hereinafter be conferred upon said board.

Section 3. Members; qualifications.

Any person, in order to be eligible for membership on the board, must be at least 21 years of age, must have been a bona fide resident and citizen of Jones County for one year immediately preceding the date of his election and must be qualified and registered to vote in Jones County for the members of the general assembly.

Section 4. [Members and districts.]

(a) The board of commissioners of Jones County shall be composed of a chairperson and four other members.

(b) The chairperson may reside anywhere within Jones County and shall be elected by the voters of the entire county. Each other member must be a resident of the district the member represents and shall be elected by only the voters of that district. All elections shall be by majority vote.

(c) For purposes of electing the members of the board, Jones County is divided into four commissioner districts as follows:

Commissioner District: 1

JONES COUNTY

***Editor's note—**Printed in this article is 1974, Ga. Laws, page 2162, as adopted by the Georgia General Assembly. Section numbers have been arbitrarily assigned to the provisions of this article, and history notes have been provided indicating the source of each section. Amendments to this Act are indicated by parenthetical history notes following amended provisions. The absence of a history note indicates that the provision remains unchanged from the original act.

VTD: 0001 BARRON AND CLINTON (Part)

Tract: 0301.02

Block(s): 108, 111, 113, 114, 115, 116, 117, 118, 119, 124, 125, 204, 205, 206, 208, 209, 225, 226, 227

Tract: 0302.

Block(s): 174, 256A, 257, 258, 259, 260, 261, 262, 293, 294, 295, 302, 303, 304, 305, 306, 307, 308, 309, 310, 311, 312, 313

Tract: 0303.

Block(s): 301, 302, 303, 304, 305, 306, 307, 308, 309, 310, 311, 312, 313B, 314B, 316C, 317B, 321, 322, 323, 327, 328, 329, 330, 331, 332, 333, 334, 341, 343, 345, 346, 347, 352, 353, 354, 377, 378, 379

VTD: 0002 FINNEY AND WHITE (Part)

Tract: 0301.01

Block(s): 201, 202, 203, 204, 205, 206, 207, 208, 209, 210, 211, 301, 302, 303, 304, 305, 306, 307, 308, 309, 310, 311, 312, 313, 314, 315, 316, 317, 318, 319, 320, 321, 322, 323, 324, 325, 326, 327, 328A, 328B, 329, 330, 331, 332, 333, 334, 335, 336, 337, 338

Tract: 0302.

Block(s): 109, 110, 111, 112, 113, 114, 115, 116, 117, 118, 119, 120, 121, 122, 123, 124, 125, 126, 127, 128, 164, 165, 166, 201, 202, 203, 204, 205, 206, 207, 208, 209, 210, 211, 212, 213, 214, 215, 223, 232, 233, 234, 235, 236, 237, 238, 239, 240, 241, 242, 243, 244, 245, 246, 248, 249, 250, 251, 252, 253, 254, 255, 256B, 263, 264, 265, 266, 267, 268, 284, 285, 286, 287, 288, 289, 291, 292, 296, 297

VTD: 0006 SANDERS

Commissioner District: 2

JONES COUNTY

VTD: 0001 BARRON AND CLINTON (Part)

Tract: 0302.

Block(s): 154, 156, 157, 159, 160, 161, 168, 169, 170, 171, 172, 173, 175, 176, 177, 178, 179, 180, 181, 182, 183, 301

Tract: 0303.

Block(s): 316B, 318B, 349, 351, 355, 356, 357, 465B

VTD: 0002 FINNEY AND WHITE (Part)

Tract: 0302.

Block(s): 129, 130, 131, 132, 155, 158, 162, 163, 167, 247

VTD: 0003 GRAY (Part)

Tract: 0303.

Block(s): 110, 150, 151, 313A, 314A, 315, 316A, 317A, 318A, 319, 326, 339, 340, 358B, 401A, 401B, 402, 403, 404, 405, 406, 407, 408, 409, 410, 411, 412, 413, 414, 415, 416, 417, 418, 419, 420, 421, 422, 429, 430, 431, 432, 433, 457A, 457B, 458, 459A, 459B, 460, 461A, 461B, 464, 465A

VTD: 0004 POPE

Commissioner District: 3

JONES COUNTY

VTD: 0001 BARRON AND CLINTON (Part)

Tract: 0303.

Block(s): 320

VTD: 0003 GRAY (Part)

Tract: 0301.02

Block(s): 101, 102, 103, 104, 105, 106, 107, 109, 110, 112, 120, 121, 122, 123

Tract: 0303.

Block(s): 109, 111, 112, 148, 149, 152, 153, 324, 325, 335, 336, 337, 338, 342, 348, 358A, 358C, 359A, 359B, 360A, 360B, 361, 362A, 362B, 363A, 363B, 365, 366, 367, 368, 369, 373, 374, 375, 376, 423, 424, 425, 426, 427, 428, 434, 435, 436, 437, 438, 439, 440, 441, 442, 443, 444, 445, 446, 447, 448, 449, 450, 451, 452, 453, 454A, 454B, 455A, 455B, 455C, 456, 462, 463, 466, 467, 468

VTD: 0005 ROBERTS (Part)

Tract: 0301.02

Block(s): 201, 202, 203, 207, 213, 214, 215, 216, 219, 220, 221, 222, 223, 224, 228, 229

Tract: 0303.

Block(s): 515, 523, 524, 527, 531, 532, 533, 534, 535, 536, 539, 540, 541, 542, 543, 547, 548, 554, 555, 556, 557, 558, 559

VTD: 0007 DAVIDSON

Commissioner District: 4

JONES COUNTY

VTD: 0005 ROBERTS (Part)

Tract: 0301.02

Block(s): 301, 302, 303, 304, 305, 306, 307, 308, 309, 310, 311, 312, 313, 314, 315, 316, 317, 318, 319, 320, 321, 322, 323, 324, 325, 326, 327, 328, 329, 330, 331

VTD: 0008 ROBERTS 4

(d) For purposes of this section:

(1) The terms "Tract," "Block," and "VTD" shall mean and describe the same geographical boundaries as provided in the report of the Bureau of the Census for the United States decennial census of 1990 for the State of Georgia;

(2) The term "Precinct" is synonymous with the term "voting precinct" and means a geographical area designated by article 7 of chapter 2 or 3 of title 21 of the O.C.G.A. within which all electors vote at one polling place;

(3) Precinct names and designations following VTD designations are included for convenience only; and in the event the description of any commissioner district contains a conflict between the geographical boundaries of any VTD and the boundaries of the following named precinct, the geographical boundary of the VTD as shown on the census maps for the United States decennial census of 1990 for the State of Georgia shall control;

(4) Any part of Jones County which is not included in any commissioner district described in this section shall be included within that commissioner district contiguous to such part which contains the least population according to the United States decennial census of 1990 for the State of Georgia; and

(5) Any part of Jones County which is described in this section as being included in a particular commissioner district shall nevertheless not be included within such commissioner district if such part is not contiguous to such commissioner district. Such noncontiguous part shall instead be included within that commissioner district contiguous to such part which contains the least population according to the United States decennial census of 1990 for the State of Georgia.

(e) The chairperson and each other member of the board shall serve for a term of four years beginning the first day of January next following his or her election. Those members serving in office on the effective date of this Act shall serve until the expiration of the term for which they were elected. The first members elected under this section shall be elected at the November, 1996, general election. Successors shall be elected thereafter at the general election immediately preceding the expiration of a term of office.
(1995 Ga. Laws, page 4131, § 1)

Section 5. Oath.

Before entering upon the discharge of their duties, the commissioners shall subscribe an oath before the ordinary of Jones County for the true and faithful performance of their duties and that they are not the holders of any public funds unaccounted for. The commissioners shall each give a satisfactory surety bond, approved by and payable to the ordinary of Jones County and filed in the office of the ordinary, in the sum of $5,000.00, conditioned upon the faithful performance of the duties of their office. The cost of the bonds shall be paid from the funds of Jones County.

Section 6. [Vice-chairman.]

At the first regular meeting in January of each four-year term of office, the board shall elect from its members a vice-chairman. The chairman shall preside at all meetings of the board. In the event of the death, disqualification, or resignation of the chairman, the vice-chairman shall perform the duties and have the authority of the chairman until a new chairman is chosen as provided in this Act. The vice-chairman shall preside at board meetings in the absence of the chairman. In the event of a vacancy in the office of vice-chairman, the board shall elect a new vice-chairman to serve for the remainder of the unexpired term.
(1984 Ga. Laws, page 5177, § 2)

Section 7. [Vacancy in office of vice-chairman.]

(a) Any vacancy in the office of chairman or member of the board which occurs more than 180 days before the expiration of a term of office shall be filled by special election.

(b) Any vacancy in the office of chairman or member of the board which occurs 180 days or less before the expiration of a term of office shall be filled by the remaining members of the board appointing a successor; and such appointment shall be made within 15 days after the vacancy occurs.

(c) Any person elected or appointed to fill a vacancy must meet all qualifications for election to the office; and any person elected or appointed to fill a vacancy shall serve for the remainder of the unexpired term.
(1984 Ga. Laws, page 5177, § 3)

Section 8. [Compensation.]

The chairperson of the board shall receive as compensation, the sum of $1,000.00 per month, and the remaining members of the board shall receive, as compensation, the sum of $800.00 per month. Said members when traveling outside the county on county business shall also [receive] travel expenses when traveling by personal motor vehicle at the legal mileage rate authorized under Code Section 50-19-7 of the O.C.G.A., as now or hereafter amended, and actual expenses for lodging and meals upon submitting an itemized, verified account to the board and upon approval by a majority of the members of the board. In addition, each member of the board, including the chairperson, shall receive a monthly expense allowance of $250.00. All of such amounts shall be paid from funds of Jones County.
(1998 Ga. Laws, page 3912, § 1; 2007 Ga. Laws, pages 4202, 4205)

Section 9. [Fiscal affairs and meetings of the board.]

The fiscal affairs of the county, including the raising of revenue and the approval of the annual budget, shall be under the control of the board. The board shall have regular meetings on the first Tuesday of each month. The board may meet in extraordinary session as often as the affairs of the county may require, upon call of the chairman or any three other members of the board. At all meetings of the board a majority of the five members thereof shall constitute a quorum for the transaction of ordinary business, but a majority vote of the five

members of the board shall be required to take official action. The chairman shall have a vote on all matters before the board. The meetings shall be held in such office or offices as may be designated in the Jones County Courthouse.
(1984 Ga. Laws, page 5177, § 5)

Section 10. [Clerk, compensation payment for duties of office.]

The board of commissioners shall have the authority to appoint a clerk who shall be a competent bookkeeper, whose duty it shall be to keep all the records pertaining to the county's business. The commissioners shall have the authority to fix the compensation of the clerk who shall serve at the pleasure of the board. Said clerk shall be appointed for a term of four years to coincide with the term of the newly elected board. The duties of the clerk shall be restricted to clerical work only. The clerk shall give a satisfactory surety bond, approved by and payable to the ordinary of Jones County and filed in the office of the ordinary, in the sum of $5,000.00, conditioned upon the faithful performance of the duties of his office. The cost of the bond shall be paid from the funds of Jones County.
(House Bill No. 2067)

Section 11. County administrator.

The board of commissioners may employ a county administrator who, when so appointed, shall be directly responsible to the board for the efficient and economical conduct of his duties. The county administrator, hereinafter referred to as the administrator, shall have such qualifications and experience as said board shall require. The compensation of the administrator shall be fixed by the board. The administrator shall be removable at the pleasure of the board, and any vacancy created by such removal shall be filled by the board as soon as is practical. The administrator shall give a satisfactory surety bond approved by and payable to the ordinary of Jones County or his successor in office and filed in the office of the ordinary in a sum fixed by the board, but not less than $10,000.00, conditioned upon the faithful performance of the duties of his office. The cost of the bond shall be paid from the funds of Jones County. The administrator shall devote his entire time to the duties of his office, shall provide administrative assistance for the board and chairman, and he may perform, at the direction of the board, the duties enumerated as follows:

(1) Keep and maintain accurate records reflecting the financial affairs of the county.

(2) Compile yearly at a time specified by the board an annual budget covering all anticipated revenues, the sources thereof, and anticipated expenditures for the ensuing year for the approval of the board.

(3) Sign checks and disburse monthly allotments of monies appropriated and budgeted to each department, office or agency of the county entitled to receive same.

(4) Maintain current accounts of the collection and deposit of monies due the county from taxes and other sources.

(5) Examine all claims against the county and make recommendations as to payment.

(6) Maintain budgetary control accounts showing encumbrances for obligations entered into, liquidation of such encumbrances, unencumbered balances of allotments, unexpended balances of allotments, and all unallotted balances of appropriations.

(7) Maintain proprietary accounts of the current assets and of the liabilities of all county funds.

(8) Prepare and issue monthly budgetary reports of the operations of all county funds.

(9) Maintain property control records of all county property, including equipment and stores.

(10) Plan and prepare for meeting the financial needs of the county, project financial requirements, recommend a means of financing those requirements and advise the chairman and the board on financial matters.

(11) Conduct such internal audits of county funds as the board of commissioners may direct.

(12) Direct and supervise the administration of all county offices and functions and specifically the construction, maintenance and operation of all county roads, bridges, drains, buildings and other public works, the care and maintenance of all personal property owned by Jones County, and the performance of all contracts entered into by the county.

(13) Appoint, fix the compensation of, and, when in his discretion the welfare of the county requires it, suspend, discharge, transfer or remove all employees for whom the said board is responsible, except employees hereinbefore named who are appointed directly by said board.

(14) Attend all meetings of the board.

(15) Act as purchasing agent for the county and enter into, on behalf of the county, all contracts for the purchase by the county of equipment, supplies and services and sign all vouchers for the payment of the same subject to the laws of the State of Georgia and to the rules and regulations of the board.

(16) Perform such other duties as may be prescribed by the board.

Section 12. Audit.

(a) It shall be the duty of the board of commissioners of Jones County to have conducted an annual audit of financial affairs, books and records of Jones County, in accordance with the provisions of this section. The board of commissioners shall select a certified public accountant or a firm of certified public accountants and employ such certified public accountant or firm so selected as the auditor of the county to conduct an audit of the county books and records at the close of each fiscal year of said county.

(b) The auditor so appointed shall make the audits provided for in this section in accordance with generally accepted governmental accounting procedures and principles and shall submit a complete and final report and audit to the board of commissioners not later than 120 days

after the close of the fiscal year of the county. All audits provided for in this Section shall be certified to include, and shall include, but shall not be limited to, a full and complete audit containing a balance sheet, income statement, a statement of receipts and disbursements, and a statement showing all indebtedness of whatever kind of the county, its departments and agencies. In the statement of receipts and disbursements, said auditors shall list the names of the persons, firms or corporations who received a total of $100.00 or more during the preceding fiscal year and show for what purpose these funds were received. Such audit reports shall, in addition to showing a complete audit on a county basis, contain a separate report for each department and agency of the county government. Should the auditor discover any violations of the law, or any irregularities in any of the books of record or procedures of the county, its departments and agencies, it shall be the duty of the auditor to immediately report such violations or irregularities to the board of commissioners and to the grand jury then in session, or if no grand jury is in session, then to the first grand jury convened after such violation or irregularities are discovered.

(c) All audits, as provided for in this section, shall be reproduced in sufficient number, and a copy shall be delivered and filed with the clerk of the superior court of Jones County and such copy shall be maintained in the office of the clerk of the superior court of Jones County for public inspection and the clerk of the superior court shall provide certified copies on request and upon payment of the fee of the clerk therefor.

(d) The office of the board of commissioners and the records maintained therein shall be open to inspection by the public at all times during normal office hours, but such inspection shall not interfere with the orderly conduct of business. Records shall not be removed from the board of commissioner's office except by court order or when accompanied by an appointed custodian representing the office of the board of commissioners.

(e) The compensation of the auditor shall be fixed by agreements between the board of commissioners and the auditor selected to make such audit. The compensation of the auditor, as determined pursuant to this subsection, shall be payable from the funds of Jones County.

Section 13. County attorney.

The board shall have the authority to employ a county attorney whose duties shall be to advise the board, its chairman and the county administrator on all legal matters coming before them and to represent the county in all matters pending in the courts when the county is party. Said attorney shall be appointed for a term of four years to coincide with the term of the newly elected board of commissioners. Said attorney shall serve at the pleasure of the board and at such compensation as the board may agree upon. Whenever it is deemed necessary, the board may appoint additional counsel to assist the county attorney.
(House Bill No. 2067)

Section 14. Chairman.

All process, original, reissue or final, citations, notices, deeds and contracts issued by or on behalf of said board, shall be signed by the chairman, or, at the direction of the board, the county administrator, under the test of the clerk except in cases where the general law otherwise provides.

Section 15. [Purchases.]

All purchases of supplies, equipment, and other materials in an amount in excess of $25,000.00 shall be by competitive sealed bids with advertisement of said purchases to be published in the official organ of Jones County one time before the date of purchase. The board shall attempt to obtain at least three competitive bids, and the board shall accept the best bid in accordance with the terms of the advertisement. The provisions of this section shall not apply to emergency purchases or repairs. No purchase by the county shall be made from a relative of a member of the board within the first degree of kinship, except by sealed bid as provided in this section.
(1998 Ga. Laws, page 3912, § 2; 2004 Ga. Laws, page 4552 (House Bill No. 2067); Ord. No. 2009-003, 1-5-2010)

Section 15.(a). Surplus property.

Any salvage or surplus property owned by Jones County with a value in excess of $1,000.00, as estimated by the board, shall be sold by competitive sealed bid with advertisement of said sale published in the official organ of Jones County one time before the date of sale. The board shall attempt to obtain at least two competitive sealed bids, and the board shall accept the best bid in accordance with the terms of the advertisement. The county shall not obtain sealed bids for the sale of surplus property with a value of less than $1,000.00. Notice of items for sale shall be posted on the county bulletin board and those vendors participating on the vendor bid list shall be notified.
(2004 Ga. Laws, page 4552 (House Bill No. 2067))

Section 15A. [Lease of property.]

The board of commissioners of Jones County is authorized to lease the county owned property known as the Jonesco Golf Course for a period not to exceed ten years and upon such terms and conditions as the said governing authority shall, in its discretion, determine to be in the best interest of Jones County.
(1988 Ga. Laws, page 4878, § 1)

Section 15(B). [Purchasing card and credit card for county elected officials.]

(a) Intent and scope.

This Act is intended to comply with the policy requirements of O.C.G.A. § 36-80-24 regarding the use of county issued government purchasing cards and credit cards.

(b) Definitions.

(1) "Authorized elected official" means an elected official designated by public vote of the board of commissioners to receive a county issued government purchasing card or credit card.

(2) "Card Administrator" means the purchasing card and credit card administrator designated by the Jones County board of commissioners.

(3) "County" means Jones County and/or the board of commissioners.

(4) "County purchase card," "county p-card" or "county credit card" means a financial transaction card issued by any business organization, financial institution, or any duly authorized agent of such organization or institution, used by a county official to purchase goods, services and other things of value on behalf of the county.

(5) "Financial transaction card" means an instrument or device as the term is defined in O.C.G.A. § 16-9-30(5).

(6) "User agreement" means the required agreement between the board of commissioners and the authorized elected officials which restricts the use of a county purchasing card or credit card.

(c) Designated elected officials.

The Jones County board of commissioners ("County"), in its discretion, may authorize specific county elected officials to use a county purchasing card or credit card by adoption of a resolution in a public meeting.

No authorized elected official may use a county purchasing card or credit card until and unless he or she has executed the county's purchasing card and credit card user agreement.

The county will not make payments to any business organization, financial institution, or any duly authorized agent of such organization or institution, for amounts charged by an elected official to any purchasing cards or credit cards that are not issued pursuant to this ordinance or for any purchases that are not authorized by this ordinance.

(d) Card administrator. The board of commissioners does hereby designate the county finance director as the county purchasing card and credit card administrator. The responsibilities of the card administrator include:

(1) Manage county issued purchasing cards and credit cards.

(2) Serve as the main point of contact for all county purchasing card and credit card issues.

(3) Serve as liaison to the elected officials authorized to use a purchasing card or credit card and their staff, as well as to the issuer of the purchasing card or credit card.

(4) Provide training on card policies and procedures to the elected officials authorized to use a purchasing card or credit card and their staff.

(5) Develop internal procedures to ensure timely payment of cards.

(6) Assist authorized elected officials to dispute transactions when necessary.

(7) Establish internal procedures to ensure compliance with this Act, county procurement ordinances and policies, county purchasing card and credit card user agreements, applicable agreements with the business organization, financial institution, or any duly authorized agent of such organization or institution, issuing card, and state law, specifically, O.C.G.A. §§ 16-9-37 and 36-80-24.

(8) Document internal controls, audits and other measures to prevent and detect misuse or abuse of the cards.

(9) Audit and reconcile transactions monthly.

(10) Maintain records for at least seven years or as otherwise provided by the county's record retention policy.

(e) Use of cards.

(1) Authorized purchases. County purchase cards and credit cards may be used to purchase goods and services directly related to the public duties of the authorized elected official only. All purchases are subject to the terms of this Act, the county purchasing card and credit card user agreement, county procurement policies and ordinances, and the adopted budget.

Only authorized elected officials may use a county purchase card or credit card for purchases or payments. The cards, and use of the cards, are not transferrable to employees. The authorized elected official shall use care to ensure that others do not have access to the card account number, expiration date and security code. This paragraph does not apply to the Sheriff of Jones County.

Unless otherwise approved by the governing authority or established in the county purchasing card and credit card user agreement, the transaction limits are as follows:

Jones County Board of Commissioners:
Per Transaction: $1,500.00
Per Month: $2,500.00

Sheriff of Jones County:
Per Transaction: $1,500.00
Per Month: $10,000.00

(2) Unauthorized purchases. County purchasing cards and credit cards shall not be used for goods and services not directly related to the official responsibilities of the authorized elected official. Additionally, cards shall not be used to avoid compliance with the county's purchasing ordinances and procedures, to purchase goods and services that are not approved in the county's budget, to purchase goods and services exceeding the per transaction or per month limit, or to make purchases not in compliance with the county purchasing card and credit card user agreement.

(3) Receipts and documentation. Receipts, invoices and other supporting documentation of all purchases made with a county purchasing card or credit card shall be obtained and maintained by the authorized county elected official for five years or as otherwise provided by the county's record retention policy. If an original or duplicate cannot be produced, a sworn affidavit of the authorized elected official may be substituted. The documentation must include the supplier or merchant information

(i.e., name and location), quantity, description, unit price, total price, price paid without sales tax and an explanation of the purchase sufficient to show that the expense was in the performance of official county duties.

(4) Public records. All receipt and other documentation of purchases are public records and subject to the requirements of O.C.G.A. § 50-18-70 et seq.

(f) Review of purchases and audit. Proper documentation of purchases, internal controls and other measures prevent and allow detection of misuse or abuse of county issued purchase cards and credit cards. Authorized elected officials and staff that process payments under this program shall cooperate and comply with the procedures established by the county.

(1) Review of purchases. All purchases shall be reviewed according to the following procedure:

Jones County board of commissioners: Submission to the card administrator within seven days of purchase. Review of purchase by card administrator to insure compliance. Submission of receipt(s) to accounts payable for pay out.

Sheriff of Jones County: Submission of receipt(s) to accounts payable within 45 days of purchase.

(2) Audits. The card administrator shall perform an annual review of the card program to ensure adequacy of internal policies and procedures, cardholder spending limits, monthly reconciliation procedures and documentation for transactions. Elected officials and staff shall cooperate with such review.

(g) Violations.

(1) An elected official shall reimburse the county for any purchases made with a county issued purchase card or credit card in violation of this Act or the user agreement.

(2) In the discretion of the county governing authority, failure to comply with the procedures outlined in this Act may result in:

a. A warning;

b. Suspension of the elected official's authority to use a county purchase card or credit card; or

c. Revocation of the elected official's authority to use a county purchase card or credit card.

d. Nothing in this Act shall preclude the county governing authority from referring misuse of a purchase card or credit card for prosecution to the appropriate authorities.

(Ord. No. 201511-10, 12-1-2015)

Section 16. [Notice of disbursements; reports of salaries.]

(a) The board shall cause to be published annually in the official organ of Jones County a summary statement by county department of all revenues and expenses for the previous fiscal budget year. The time for the annual publishing shall not exceed 180 days after the end of the fiscal budget year to be reported.

(b) In February of each year, the governing authority of Jones County shall have prepared a report which includes the name, department, and then current salary of each county employee. The name, department, and starting salary of each new employee hired after such report is prepared shall be added to and become a part of such report. Copies of the report or portions thereof shall be available to the general public upon request during regular business hours, provided that the county is authorized to charge a reasonable fee to cover the costs of providing such copies.
(1987 Ga. Laws, page 4308, § 1; 1996 Ga. Laws, page 3793, § 1; House Bill No. 2067)

Section 17. [Checks to be signed.]

All checks drawn on county funds shall be signed by the chairman or vice-chairman and at least one other member, except that should a county administrator be appointed he may sign such checks together with the chairman or vice-chairman.
(1984 Ga. Laws, page 5177, § 6)

ARTICLE II. OFFICERS AND EMPLOYEES

DIVISION 1. SHERIFF*

Section 1. Salary basis.

The present method of compensating the sheriff of Jones County, known as the fee system, is hereby abolished and in lieu thereof the sheriff shall receive an annual salary as hereinafter provided.

Section 2. [Annual salary; cost-of-living increase.]

(a) The sheriff of Jones County shall receive an annual salary of not less than $25,000.00. The salary shall be paid in equal monthly installments by the governing authority of Jones County from funds of the county.

***Editor's note—**Printed in this division is 1964 Ga. Laws, Extra Session, page 2169, as adopted by the Georgia General Assembly. Section numbers have been arbitrarily assigned to the provisions of this division, and history notes have been provided indicating the source of each section. Amendments to this Act are indicated by parenthetical history notes following amended provisions. The absence of a history note indicates that the provision remains unchanged from the original act.

(b) On and after January 1, 1986, when the governing authority of Jones County grants a cost-of-living increase in the compensation of county employees, the average percentage by which the compensation of county employees is increased shall be applied to the then current salary of the sheriff, and the salary of said officer shall be increased by such average percentage; but if such average percentage is less than three percent, then a three percent increase shall be applied to the then current salary of the sheriff and the salary of said officer shall be increased by said three percent.
(1984 Ga. Laws, page 3743, § 1)

Section 3. Fees.

After the effective date of this Act, the sheriff shall diligently and faithfully undertake to collect all fees, fines, forfeitures, commissions, costs, allowances, penalties, funds, monies and all other emoluments and perquisites formerly allowed him as compensation for services in any capacity, and shall receive and hold the same in trust for said county as public monies, and shall pay the same to the county fiscal authority on or before the tenth day of each month next following the month in which they were collected or received. At the time of each such monthly payment, the sheriff shall also furnish the county fiscal authority a detailed, itemized statement, under oath, of all such funds received during the preceding month. The statement shall show the respective amounts of money collected and the source thereof.
(1984 Ga. Laws, page 3743, § 1)

Section 4. [Power and authority to appoint personnel.]

(a) The sheriff of Jones County shall have the sole power and authority to appoint deputies and personnel as follows:

(1) A chief deputy, who shall be compensated in an amount not less than $20,000.00 per year;

(2) Three additional deputy sheriffs, one of whom may be designated as jailer, and each of whom shall receive compensation of not less than $3,600.00 per year;

(3) Such additional deputies as may be from time to time recommended by the sheriff and concurred in by the governing authority of the county and whose compensation shall be not less than $3,600.00 per year; and

(4) A clerk who shall be compensated in an amount not less than $5,400.00 per year. Such clerk shall perform such duties as shall be assigned by the sheriff.

(b) The compensation to be paid to the employees of the sheriff shall be set by the sheriff with the concurrence of the county governing authority.

(c) When the governing authority of Jones County grants a cost-of-living increase in the compensation of county employees, the average percentage by which the compensation of county employees is increased shall be applied to the then current salary of each employee of the sheriff listed in subsection (a) of this section, and the salary of each such employee shall be increased by such average percentage.

(d) This section shall not be construed to reduce the salary of any employee listed in subsection (a) of this section who was employed on January 1, 1985.

(e) When using his or her personal automobile in traveling on official business outside the county, the sheriff shall be reimbursed for travel expenses at the legal mileage rate authorized under O.C.G.A. § 50-19-7, as now or hereafter amended. All expenses provided for in this section shall be paid from the funds of Jones County.
(1984 Ga. Laws, page 3743, § 2; 1998 Ga. Laws, page 4048, § 1)

Section 5. Operating expenses.

The necessary operating expenses of the sheriff's office, expressly including the compensation of the sheriff and his deputies, shall be paid from any funds of the county available for such purposes. All supplies, materials, furnishings, furniture, utilities, uniforms, weapons and ammunition, as may be reasonably required in discharging the official duties of said office, shall be furnished by the county and shall be paid from any funds of the county available for such purpose.
(1969 Ga. Laws, page 2150, § 3)

Section 6. Automobiles.

The county shall also furnish the sheriff with two automobiles and equipment. The county shall be responsible for the maintenance thereof, and such vehicles shall be replaced when, in the discretion of the board of commissioners of roads and revenues of Jones County, such replacement is necessary.
(1967 Ga. Laws, page 2517, § 2)

ARTICLE III. BOARDS AND AUTHORITIES

DIVISION 1. BOARD OF EDUCATION*

Section 1. [Members.]

There shall be a board of education of Jones County which shall consist of a chairperson and four other members. The members of the board of education in office on the effective date of this Act shall serve out the terms for which they were elected.
(1995 Ga. Laws, page 3809, § 1)

Section 2. [Elections; districts.]

(a) At the general election held in 1998 and quadrennially thereafter there shall be elected a chairperson and four members of the board as provided in this section.

(b) The chairperson may reside anywhere within the Jones County school district and shall be elected by the voters of the entire school district. Each other member must be a resident of the district the member represents and shall be elected by only the voters of that district. All elections shall be by majority vote.

(c) For purposes of electing the members of the board, the Jones County school district is divided into four education districts as follows:

Education District: 1

JONES COUNTY

VTD: 0001 BARRON AND CLINTON (Part)

Tract: 0301.02

Block(s): 108, 111, 113, 114, 115, 116, 117, 118, 119, 124, 125, 204, 205, 206, 208, 209, 225, 226, 227

***Editor's note—**Printed in this division is 1984, Ga. Laws, 4459, as adopted by the Georgia General Assembly. Section numbers have been arbitrarily assigned to the provisions of this division and history notes have been provided indicating the source of each section. Amendments to this act are indicated by parenthetical history notes following amended provisions. The absence of a history note indicates that the provision remains unchanged from the original act.

Tract: 0302.

Block(s): 174, 256A, 257, 258, 259, 260, 261, 262, 293, 294, 295, 302, 303, 304, 305, 306, 307, 308, 309, 310, 311, 312, 313

Tract: 0303.

Block(s): 301, 302, 303, 304, 305, 306, 307, 308, 309, 310, 311, 312, 313B, 314B, 316C, 317B, 321, 322, 323, 327, 328, 329, 330, 331, 332, 333, 334, 341, 343, 345, 346, 347, 352, 353, 354, 377, 378, 379

VTD: 0002 FINNEY AND WHITE (Part)

Tract: 0301.01.

Block(s): 201, 202, 203, 204, 205, 206, 207, 208, 209, 210, 211, 301, 302, 303, 304, 305, 306, 307, 308, 309, 310, 311, 312, 313, 314, 315, 316, 317, 318, 319, 320, 321, 322, 323, 324, 325, 326, 327, 328A, 328B, 329, 330, 331, 332, 333, 334, 335, 336, 337, 338

Tract: 0302.

Block(s): 109, 110, 111, 112, 113, 114, 115, 116, 117, 118, 119, 120, 121, 122, 123, 124, 125, 126, 127, 128, 164, 165, 166, 201, 202, 203, 204, 205, 206, 207, 208, 209, 210, 211, 212, 213, 214, 215, 223, 232, 233, 234, 235, 236, 237, 238, 239, 240, 241, 242, 243, 244, 245, 246, 248, 249, 250, 251, 252, 253, 254, 255, 256B, 263, 264, 265, 266, 267, 268, 284, 285, 286, 287, 288, 289, 291, 292, 296, 297

VTD: 0006 SANDERS

Education District: 2

JONES COUNTY

VTD: 0001 BARRON AND CLINTON (Part)

Tract: 0302.

Block(s): 154, 156, 157, 159, 160, 161, 168, 169, 170, 171, 172, 173, 175, 176, 177, 178, 179, 180, 181, 182, 183, 301

Tract: 0303.

Block(s): 316B, 318B, 349, 351, 355, 356, 357, 465B

VTD: 0002 FINNEY AND WHITE (Part)

Tract: 0302.

Block(s): 129, 130, 131, 132, 155, 158, 162, 163, 167, 247

VTD: 0003 GRAY (Part)

Tract: 0303.

Block(s): 110, 150, 151, 313A, 314A, 315, 316A, 317A, 318A, 319, 326, 339, 340, 358B, 401A, 401B, 402, 403, 404, 405, 406, 407, 408, 409, 410, 411, 412, 413, 414, 415, 416, 417, 418, 419, 420, 421, 422, 429, 430, 431, 432, 433, 457A, 457B, 458, 459A, 459B, 460, 461A, 461B, 464, 465A

VTD: 0004 POPE

Education District: 3

JONES COUNTY

VTD: 0001 BARRON AND CLINTON (Part)

Tract: 0303.

Block(s): 320

VTD: 0003 GRAY (Part)

Tract: 0301.02.

Block(s): 101, 102, 103, 104, 105, 106, 107, 109, 110, 112, 120, 121, 122, 123

Tract: 0303.

Block(s): 109, 111, 112, 148, 149, 152, 153, 324, 325, 335, 336, 337, 338, 342, 348, 358A, 358C, 359A, 359B, 360A, 360B, 361, 362A, 362B, 363A, 363B, 365, 366, 367, 368, 369, 373, 374, 375, 376, 423, 424, 425, 426, 427, 428, 434, 435, 436, 437, 438, 439, 440, 441, 442, 443, 444, 445, 446, 447, 448, 449, 450, 451, 452, 453, 454A, 454B, 455A, 455B, 455C, 456, 462, 463, 466, 467, 468

VTD: 0005 ROBERTS (Part)

Tract: 0301.02.

Block(s): 201, 202, 203, 207, 213, 214, 215, 216, 219, 220, 221, 222, 223, 224, 228, 229

Tract: 0303.

Block(s): 515, 523, 524, 527, 531, 532, 533, 534, 535, 536, 539, 540, 541, 542, 543, 547, 548, 554, 555, 556, 557, 558, 559

VTD: 0007 DAVIDSON

Education District: 4

JONES COUNTY

VTD: 0005 ROBERTS (Part)

Tract: 0301.02.

Block(s): 301, 302, 303, 304, 305, 306, 307, 308, 309, 310, 311, 312, 313, 314, 315, 316, 317, 318, 319, 320, 321, 322, 323, 324, 325, 326, 327, 328, 329, 330, 331

VTD: 0008 ROBERTS 4

(d) For purposes of this section:

(1) The terms "Tract," "Block," and "VTD" shall mean and describe the same geographical boundaries as provided in the report of the Bureau of the Census for the United States decennial census of 1990 for the State of Georgia;

(2) The term "Precinct" is synonymous with the term "voting precinct" and means a geographical area designated by article 7 of chapter 2 or 3 of title 21 of the O.C.G.A. within which all electors vote at one polling place;

(3) Precinct names and designations following VTD designations are included for convenience only; and in the event the description of any education district contains a conflict between the geographical boundaries of any VTD and the boundaries of the following named precinct, the geographical boundary of the VTD as shown on the census maps for the United States decennial census of 1990 for the State of Georgia shall control;

(4) Any part of Jones County which is not included in any education district described in this section shall be included within that education district contiguous to such part which contains the least population according to the United States decennial census of 1990 for the State of Georgia; and

(5) Any part of Jones County which is described in this section as being included in a particular education district shall nevertheless not be included within such education district if such part is not contiguous to such education district. Such noncontiguous part shall instead be included within that education district contiguous to such part which contains the least population according to the United States decennial census of 1990 for the State of Georgia.

(e) The chairperson and each other member of the board shall serve for a term of four years beginning the first day of January next following his or her election. Successors shall be elected thereafter at the general election immediately preceding the expiration of a term of office.
(1995 Ga. Laws, page 3809, § 2)

Section 3. [Election.]

At the first regular meeting in January of each four-year term of office, the board shall elect from its members a vice-chairman. The chairman shall preside at all meetings of the board and shall have a vote on all matters before the board. In the event of the death, disqualification, or resignation of the chairman, the vice-chairman shall perform the duties and have the authority of the chairman until a new chairman is chosen as provided in this Act. The vice-chairman shall preside at board meetings in the absence of the chairman. In the event of a vacancy in the office of vice-chairman, the board shall elect a new vice-chairman to serve for the remainder of the unexpired term.

Section 4. [Vacancy.]

(a) Any vacancy in the office of chairman or member of the board which occurs more than 180 days before the expiration of a term of office shall be filled by special election.

(b) Any vacancy in the office of chairman or member of the board which occurs 180 days or less before the expiration of a term of office shall be filled by the remaining members of the board appointing a successor; and such appointment shall be made within 15 days after the vacancy occurs.

(c) Any person elected or appointed to fill a vacancy must meet all qualifications for election to the office; and any person elected or appointed to fill a vacancy shall serve for the remainder of the unexpired term.

Section 5. [Compensation; reinbursement.]

(a) Until January 1, 1987, the members of the board of education, other than the chairman, shall be compensated in the amount of $100.00 per month for their services and the chairman shall be compensated in the amount of $125.00 per month for service as chairman.

(b) On and after January 1, 1987, the chairman shall be compensated in the amount of $350.00 per month and each other member of the board shall be compensated in the amount of $200.00 per month.

(c) The members and chairman shall, upon approval by a majority of the members of the board, be reimbursed for actual and necessary expenses incurred by them when traveling out of the county on official business.

DIVISION 2. BOARD OF ELECTIONS AND REGISTRATION*

Section 1. [Creation of board.]

(a) Pursuant to the authorization of O.C.G.A. § 21-2-40, there is created the Jones County Board of Elections and Registration.

(b) For the purposes of this Act, the terms "election," "elector," "political party," "primary," "public office," "special election," and "special primary" shall have the meanings ascribed to those words by O.C.G.A. § 21-2-2, unless otherwise clearly apparent from the text of this Act; the term "board" means the board of elections and registration created by subsection (a) of this section; the term "county" means Jones County; and the term "superior court" means the Superior Court of Jones County.

***Editor's note—**Printed in this division is 1995 Ga. Laws, page 3923, as adopted by the Georgia General Assembly. Section numbers have been arbitrarily assigned to the provisions of this division, and history notes have been provided indicating the source of each section. Amendments to this Act are indicated by parenthetical history notes following amended provisions. The absence of a history note indicates that the provision remains unchanged from the original act.

Section 2. [Members.]

The board shall be composed of three members, each of whom shall be an elector and resident of the county and who shall be appointed as provided in this section. One member of the board shall be appointed by the political party which received the highest number of votes within the county for its candidate for governor in the general election immediately preceding the appointment of the member. One member of the board shall be appointed by the political party which received the second highest number of votes within the county for its candidate for governor in the general election immediately preceding the appointment of such member. Each of these two respective members appointed by political parties shall be nominated by the chairperson and ratified by the county executive committee of the respective political party at least 30 days before the beginning of the term of office or within 30 days after the creation of a vacancy in the office. The remaining member of the board shall be selected by the Board of Commissioners of Jones County and shall be the chairperson of the board. In making the initial appointments to the board, the members shall be selected at least 30 days prior to January 1, 1996. Initial members and their successors shall be appointed for terms of four years and until their successors are duly appointed and qualified. The term of each initial member shall commence on January 1, 1996.

Section 3. [Office.]

No person who holds elective public office shall be eligible to serve as a member during the term of such elective office, and the position of any member shall be deemed vacant upon such member's qualifying as a candidate for elective public office.

Section 4. [Appointment.]

The board of commissioners of Jones County shall certify the appointment of each member by filing an affidavit with the clerk of the superior court no later than 15 days preceding the date upon which such members are to take office, stating the name and residential address of the person appointed and certifying such member has been duly appointed as provided in this Act. The clerk of superior court shall record each of such certifications on the minutes of the superior court and shall certify the name of each such appointed member to the secretary of state and provide for the issuance of appropriate commissions to the members within the same time and in the same manner as provided by law for registrars.

Section 5. [Term.]

Each member of the board shall be eligible to serve successive terms, shall have the right to resign at any time by giving written notice of such resignation to the appointing body and to the clerk of the superior court, and shall be subject to removal from the board by the appointing body at any time, for cause, after notice and hearing, in the same manner and by the same authority as provided for removal of registrars.

Section 6. [Vacancy.]

In the event a vacancy occurs in the office of any appointed member before the expiration of his or her term, by removal, death, resignation, or otherwise, the original appointing body shall appoint a successor to serve the remainder of the unexpired term as provided for in Section 2 of this Act. The clerk of the superior court shall be notified of interim appointments and record and certify such appointments in the same manner as the regular appointment of members.

Section 7. [Oath.]

Before entering upon the member's duties, each member shall take substantially the same oath as required by law for registrars and shall have the same privileges from arrest.

Section 8. [Responsibilities.]

(a) The board shall be authorized to organize itself, determine its procedural rules and regulations, adopt bylaws, specify the functions and duties of its employees, and otherwise take such action as is appropriate to the management of the affairs committed to its supervision; provided, however, no such action shall conflict with state law. Action and decision by the board shall be by a majority of the members of the board. The board shall be responsible for the selection, appointment, and training of poll workers in primaries and elections and such workers shall be appointed, insofar as practicable, from lists provided to the board by the county executive committee of each political party.

(b) The board shall fix and establish, by appropriate resolution entered on its minutes, directives governing the execution of matters within its jurisdiction. The board shall hold regular meetings and shall meet not fewer than six times per year. Any specially called meeting shall be called by the chairperson or any two members. The board shall maintain a written record of policy decisions amended to include additions or deletions. Such written records shall be made available for the public to review.

Section 9. [Municipal contracts.]

The board shall have the authority to contract with any municipality located within Jones County for the holding by the board of any primary or election to be conducted within such municipality.

Section 10. [Compensation.]

Compensation for the members of the board, clerical assistants, and other employees shall be fixed by the board of commissioners of Jones County. Such compensation shall be paid wholly from county funds.

Section 11. [Chairperson.]

The chairperson of the board shall be the chief executive officer of the board and shall generally supervise, direct, and control the administration of the affairs of the board pursuant

to law and duly adopted resolutions of the board. The board shall fix and establish, by appropriate resolution entered on its minutes, directives governing the execution of matters within its jurisdiction.

Section 12. [Offices, supplies, etc.]

The board of commissioners of Jones County shall provide the board with such proper and suitable offices, equipment, materials, and supplies and with such clerical assistance and other employees as the board of commissioners of Jones County shall deem appropriate.

Section 13. [Board of registrars abolished.]

This Act shall become effective on July 1, 1995. On January 1, 1996, the superintendent of elections and the board of registrars shall be relieved of all powers and duties to which the board of elections and registration succeeds by the provisions of this Act and shall deliver to the board all equipment, supplies, materials, books, papers, records, and facilities pertaining to such powers and duties. At such time, the board of registrars of Jones County shall stand abolished. All elections conducted during 1995 shall be conducted by the superintendent of elections and the board of registrars.

ARTICLE IV. JUDICIARY

DIVISION 1. GENERALLY

Section 1. [State librarian to furnish reports.]

Now, therefore, be it resolved by the general assembly of Georgia that the State Librarian is hereby authorized and directed to furnish the judges of the Superior Court of Jones County, Georgia, with the above listed [sic] Volumes of the Georgia Supreme Court Reports and the Georgia Court of Appeals Reports.
(1969 Ga. Laws, page 4142)

DIVISION 2. SUPERIOR COURT*

Section 1. City court abolished.

That the Act creating the city court of Gray, for the county of Jones, approved August 16, 1913 (1913 Ga. Laws, page 191) entitled an Act to create the city court of Gray, for the county of Jones; to prescribe its jurisdiction, and the powers and duties thereof; to provide for the

*__Editor's note—__Printed in this division is 1945 Ga. Laws, page 637, as adopted by the Georgia General Assembly. Section numbers have been arbitrarily assigned to the provisions of this division, and history notes have been provided indicating the source of each section. Amendments to this Act are indicated by parenthetical history notes following amended provisions. The absence of a history note indicates the provision remains unchanged from the original act.

qualification of the officers thereof, the manner of their selection and term of office; to provide for pleading and practice, and new trials and writs of error therefrom; and for other purposes, and all Acts amendatory thereto, be and they are hereby repealed in their entirety, and the said city court of Gray for the county of Jones is hereby abolished.

Section 2. Pending business and records transferred to Jones Superior Court.

Be it further enacted, that all business, both of civil and criminal, pending in the city court of Gray, at the time this Act goes into effect, shall be and the same is hereby transferred for trial and disposition to the superior court of Jones County, Georgia. The clerk of said city court of Gray and all officers of such court are hereby directed and required to turn over to the clerk of the superior court of Jones County, the papers in all cases, both civil and criminal, pending in said court at the time this Act takes effect; the dockets, minutes, books, and other records, original papers, and all other documents and papers of said city court obtaining thereto, including remittiturs from the supreme court or the court of appeals, shall be by the clerk and sheriff of said city court deposited with the clerk of the superior court of Jones County, and to be kept as part of the records of said superior court. Any cases now pending in the court of appeals or supreme court from the city court of Gray at the time this Act goes into effect, the remittiturs from said superior [sic] court or court of appeals, shall, upon the termination of said cases in such appellate court, be transmitted to the clerk of the superior court of Jones County.

Section 3. Costs to be paid into treasury of Jones County.

Be it further enacted, that any and all costs which have accrued to the County of Jones and which would be due under existing laws to be paid into the treasury of Jones County, in any case pending in said city court of Gray at the time this Act goes into effect and transferred to the superior court of Jones County, shall be paid into the treasury of Jones County as now required by law.

DIVISION 3. SUPERIOR COURT CLERK*

Section 1. [Compensation abolished; annual salary prescribed.]

The present mode of compensating the clerk of the superior court of Jones County, known as the fee system, is hereby abolished; and, in lieu thereof, an annual salary for such officer is prescribed as hereinafter provided.

***Editor's note—**Printed in this division is 1980 Ga. Laws, page 3621, as adopted by the Georgia General Assembly. Section numbers have been arbitrarily assigned to the provisions of this division, and history notes have been provided indicating the source of each section. Amendments to this act are indicated by parenthetical history notes following amended provisions. The absence of a history note indicates the provision remains unchanged from the original act.

Section 2. [Annual salary.]

The clerk of the superior court of Jones County shall receive an annual salary as provided by an Act providing minimum salaries for clerks of the superior courts, approved March 30, 1973 (1973 Ga. Laws, page 256), as amended; provided, however, that any clerk of the superior court of Jones County with at least 15 years of service in such office shall receive an annual salary of $21,500.00, payable in equal monthly installments from county funds; and such amount ($21,500.00) shall be increased by a minimum of three percent for each year of office served by the clerk figured at the end of each such period of service. Such cost-of-living increases shall not have retroactive effect but shall begin January 1, 1982. If during any year the governing authority of Jones County grants a cost-of-living allowance in excess of three percent in the compensation of county employees, the average percentage by which the compensation of county employees is increased shall be applied to the then current salary of the clerk of superior court, and the salary of said clerk of superior court shall be increased by such average percentage. The minimum percentage provided for in the preceding sentence shall be in lieu of the three percent increase granted by the other provisions of this section but shall not prohibit the governing authority from granting the clerk of superior court an increase in excess of the minimum percentage provided for in the preceding sentence.
(1984 Ga. Laws, page 3740, § 1)

Section 3. [Collection of fees, etc.]

After the effective date of this Act, said officer shall diligently and faithfully undertake to collect all fees, forfeitures, commissions, costs, allowances, penalties, funds, moneys, and all other emoluments and perquisites formerly allowed him as compensation for services in any capacity and shall receive and hold the same in trust for said county as public moneys and shall pay the same into the county treasury on or before the fifteenth day of each month next following the month in which they were collected or received. At the time of each such monthly payment into the county treasury, the clerk of the superior court shall furnish the governing authority of the county a detailed, itemized statement, under oath, of all such funds received during the preceding month by such officer and paid into the county treasury. The statement shall show the respective amounts of money collected and the source thereof.

Section 4. [Authority.]

(a) The clerk of the superior court shall have the authority to appoint a chief deputy clerk who shall receive a minimum annual salary of $6,500.00, payable in equal monthly installments from county funds. The clerk of the superior court shall have the authority to increase such annual salary of the chief deputy clerk, subject to the approval of the governing authority of Jones County.

(b) The clerk of the superior court shall have the authority to appoint one deputy clerk who shall receive a minimum annual salary of $6,500.00, payable in equal monthly installments from county funds. The clerk of the superior court shall have the authority to increase such annual salary of the deputy clerk, subject to the approval of the governing authority of Jones County.

(c) The clerk of the superior court, subject to the approval of the governing authority of Jones County, shall have the authority to appoint such additional deputies, clerks, assistants, and other personnel as he shall deem necessary to discharge efficiently and effectively the official duties of his office. He shall, from time to time, recommend to the governing authority of said county the number of such additional personnel needed by his office, together with the suggested compensation to be paid each employee. However, it shall be within the sole discretion of the governing authority of said county to determine the number of such personnel and to fix the compensation to be received by each such employee in said office. It shall be within the sole power and authority of the clerk of the superior court, during his term of office, to designate and name the person or persons who shall be employed as such deputies, clerks, assistants, or other employees, to prescribe their duties and assignments; and to remove or replace any of such employees at will and within his sole discretion.

(d) Notwithstanding any other provisions of this Act, the salary of any chief deputy clerk or deputy clerk employed on the effective date of this Act shall not be reduced by the governing authority of Jones County below the salaries paid to such persons in February, 1980.

(e) Unless the governing authority of Jones County grants greater increases pursuant to the other provisions of this section, when the governing authority of Jones County grants a cost-of-living increase in the compensation of county employees, the average percentage by which the compensation of county employees is increased shall be applied to the then current salaries of the employees of the clerk of superior court, and the salaries of such employees of the clerk of superior court shall be increased by such average percentage.
(1984 Ga. Laws, page 3740, § 2)

(f) When using his or her personal automobile in traveling on official business outside the county, the clerk of the superior court shall be reimbursed for travel expenses at the legal mileage rate authorized under O.C.G.A. § 50-19-7, as now or hereafter amended. All expenses provided for in this section shall be paid from the funds of Jones County.
(1998 Ga. Laws, page 3767, § 1)

Section 5. [Operating expenses.]

The necessary operating expenses of the clerk's office, expressly including the compensation of all personnel and employees, shall be paid from any funds of the county available for such purpose. All supplies, materials, furnishings, furniture, utilities, uniforms, vehicles, and equipment and the repair, replacement and maintenance thereof as may be reasonably required in discharging the official duties of said office shall be furnished by the county and shall be paid from any funds of the county available for such purpose. The determination of such requirements shall be by the clerk of the superior court of Jones County but subject to the approval of the governing authority of Jones County.

DIVISION 4. MAGISTRATE COURT*

[Section 1. Reserved.]

Section 2. [Chief magistrate.]

(a) The governor, with the advice and consent of the senators and representatives of the districts in which Jones County is located, shall appoint a duly qualified person to be the chief magistrate of the magistrate court of Jones County to serve for a term of office commencing July 1, 1983, and expiring February 1, 1987. Successors to such chief magistrate shall be appointed in a like manner for terms of four years.

(b) Any other magistrate taking office in Jones County on July 1, 1983, shall continue in office for a term which shall expire on the date of expiration of the term which he was serving in such other capacity. Such other magistrates shall thereafter be appointed by the chief magistrate of the magistrate court of Jones County for terms which expire on the date that the term of office of the chief magistrate expires. The chief magistrate shall not appoint more than four magistrates for said magistrate court.

(c) The clerk of the magistrate court, constables, and other court personnel of the magistrate court shall be appointed by the chief magistrate; provided, however, that the number of such court personnel shall be approved by the governing authority of Jones County.

(d) The chief magistrate appointed to the magistrate court of Jones County shall be exempt from jury duty in the superior court or any other court existing or which may be created or established in Jones County.

Section 3. [Vacancy.]

(a) A vacancy in the office of chief magistrate of the magistrate court of Jones County shall be filled in the same manner as the original appointment for the remainder of the unexpired term.

(b) A vacancy in the office of any other magistrate shall be filled by appointment by the chief magistrate for the remainder of the unexpired term.

Section 4. [Annual salary.]

(a) The chief magistrate shall receive an annual salary of $15,000.00 which shall be paid in equal monthly installments or equal semimonthly installments, as determined by the governing authority of Jones County, from the funds of such county. On and after January 1, 1984, when the governing authority of Jones County grants a cost-of-living increase in the

---

***Editor's note—**Printed in this division is 1983 Ga. Laws, page 4081, as adopted by the Georgia General Assembly. Section numbers have been arbitrarily assigned to the provisions of this division, and history notes have been provided indicating the source of each section. Amendments to this Act are indicated by parenthetical history notes following amended provisions. The absence of a history note indicates the provision remains unchanged from the original act.

compensation of county employees, the average percentage by which the compensation of county employees is increased shall be applied to the then current salary of the chief magistrate, and the salary of the chief magistrate shall be increased by such average percentage.

(b) The governing authority of Jones County shall fix the salaries of the other magistrates and the compensation of the clerk of the court, the constables, and other court personnel. Such salaries or other compensation shall not be less than the minimum wage, and such court officers and personnel shall be entitled to other benefits provided for county employees.

Section 5. [Costs and expenses.]

The costs and expenses of training required by O.C.G.A. tit. 15, ch. 10 shall be paid by the chief magistrate and other magistrates of Jones County, but such officers shall be reimbursed by the governing authority of Jones County for such costs and expenses.

Section 6. [Validity of Act.]

In the event any section, subsection, sentence, clause, or phrase of this Act shall be declared or adjudged invalid or unconstitutional, such adjudication shall in no manner affect the other sections, subsections, sentences, clauses, or phrases of this Act, which shall remain of full force and effect as if the section, subsection, sentence, clause, or phrase so declared or adjudged invalid or unconstitutional were not originally a part hereof. The general assembly declares that it would have passed the remaining parts of this Act if it had known that such part or parts hereof would be declared or adjudged invalid or unconstitutional.

ARTICLE V. TAXATION

DIVISION 1. TAX COMMISSIONER*

Section 1. [Combining of offices.]

The offices of tax receiver and tax collector of Jones County are consolidated and combined into the one office of tax commissioner of Jones County. The rights, duties, and liabilities of the tax commissioner, except as otherwise provided in this Act, shall be the same as those imposed upon the tax receivers and tax collectors by the laws of this state.

***Editor's note—**Printed in this division is 1983 Ga. Laws, page 3830, as adopted by the Georgia General Assembly. Section numbers have been arbitrarily assigned to the provisions of this division, and history notes have been provided indicating the source of each section. Amendments to this Act are indicated by parenthetical history notes following amended provisions. The absence of a history note indicates the provision remains unchanged from the original act.

Section 2. [Election and term.]

The first election for the office of tax commissioner created in this Act shall be held at the same time as the election of other county officers for Jones County in 1984. The person so elected shall take office on the first day of January following his election and shall serve until December 31, 1988, and until his successor is duly elected and qualified. All future elections for tax commissioner shall be held at the same time as elections for other county officers, and all future tax commissioners shall take office on the first day of January following their election and shall serve a term of office of four years and until their successors are duly elected and qualified. Nothing in this Act shall affect the term of office of the present tax collector and tax receiver of Jones County and their terms of office shall continue through December 31, 1984. Should any vacancy occur in the office of tax commissioner, such vacancy shall be filled in accordance with the provisions of law for filling vacancies in the office of tax collector.

Section 3. [Oath.]

Before entering upon the duties of his office, the tax commissioner shall take the oath prescribed by law for tax collectors and shall give bond as provided by law for the tax collector.

Section 4. [Taxes due and payable.]

All taxes due and payable at the time the tax commissioner takes office shall continue to be due and payable until paid. All tax fi. fas. theretofore issued shall have full force and effect and be collectable as issued.

Section 5. [Annual salary.]

(a) The tax commissioner shall receive an annual salary of not less than $25,000.00, the exact amount of which shall be determined by the governing authority of Jones County. The governing authority shall be authorized to increase such salary from time to time as it deems appropriate. Said salary shall be paid from the funds of Jones County.

(b) (1) Unless the governing authority of Jones County grants greater increases pursuant to subsection (a) of this section, on and after January 1, 1986, when the governing authority of Jones County grants a cost-of-living increase in the compensation of county employees, the average percentage by which the compensation of county employees is increased shall be applied to the then current salary of the tax commissioner, and the salary of said officer shall be increased by such average percentage. If, however, the compensation of county employees is increased by an average percentage less than three percent, then the salary of the tax commissioner shall at such time be increased by not less than three percent.

(2) When using his or her personal automobile in traveling on official business outside the county, the tax commissioner shall be reimbursed for travel expenses at the legal mileage rate authorized under O.C.G.A. § 50-19-7, as now or hereafter amended. All expenses provided for in this section shall be paid from the funds of Jones County.

(1998 Ga. Laws, page 3765, § 1)

Section 6. [Collection of fees, etc.]

After the effective date of this Act, said officer shall diligently and faithfully undertake to collect all fees, fines, forfeitures, commissions, costs, allowances, penalties, funds, moneys, and all other emoluments and perquisites formerly allowed him as compensation for services in any capacity and shall receive and hold the same in trust for said county as public moneys and shall pay the same into the county treasury on or before the fifteenth day of each month next following the month in which they were collected or received. At the time of each such monthly payment into the county treasury, the tax commissioner shall furnish the governing authority of the county a detailed, itemized statement, under oath, of all such funds received during the preceding month by such officer and paid into the county treasury. The statement shall show the respective amounts of money collected and the source thereof. It is specifically provided that the salary provided in this Act for the tax commissioner shall be in lieu of all fees, commissions, costs, fines, emoluments, and perquisites of whatever kind, including those commissions allowed by O.C.G.A. § 40-2-30(c), relating to the sale of motor vehicle license plates by local tax officials, notwithstanding the fact that such services for which the commissions are derived may have been performed in the capacity of an agent for the State Revenue Department, and allowed by O.C.G.A. § 48-5-180, relating to the commission on taxes collected in excess of a certain percentage of the taxes due according to the tax net digest.

Section 7. [Authority to employ.]

The tax commissioner shall have the authority to employ three or four, at the discretion of the tax commissioner, full-time employees and such other personnel as determined by the governing authority of Jones County. The full-time personnel shall receive a monthly salary of not less than $600.00, and the exact amount of each such salary shall be determined by the governing authority of Jones County. The governing authority shall be authorized to increase such salaries from time to time as it deems appropriate. Unless the governing authority of Jones County grants greater increases pursuant to the preceding sentence, when the governing authority of Jones County grants a cost-of-living increase in the compensation of county employees, the average percentage by which the compensation of county employees is increased shall be applied to the then current salaries of the employees of the tax commissioner, and the salaries of such employees of the tax commissioner shall be increased by such average percentage. Such salaries shall be paid from the funds of Jones County. It shall be within the sole power and authority of the tax commissioner, during the tax commissioner's term of office, to designate and name the person or persons who shall be employed, to prescribe their duties and assignments, and to remove or replace any of such employees at will and within the tax commissioner's sole discretion.
(1984 Ga. Laws, page 4080, § 2)

Section 8. [Operating expenses.]

The necessary operating expenses of the office of the tax commissioner, expressly including the compensation of all personnel and employees, shall be paid from any funds of the county available for such purposes. All supplies, materials, furnishings, furniture, utilities, uniforms,

vehicles, and equipment and the repair, replacement, and maintenance thereof as may be reasonably required in discharging the official duties of said office shall be furnished by the county and shall be paid from any funds of the county available for such purpose. The determination of such requirements shall be at the sole discretion of the governing authority of Jones County, but the compensation of the tax commissioner and the total amount for compensating personnel of his office shall be set within the limits provided by this Act.

DIVISION 2. HOMESTEAD EXEMPTIONS

Subdivision I. Low Income Seniors

Section 1. [Granting of exemptions.]

Each resident of Jones County who is 65 years of age or older is granted an exemption from Jones County ad valorem taxation for county purposes in the amount specified by this section on a homestead owned and occupied by the resident as a residence if the resident's net income, together with the net income of the resident's spouse who also occupies and resides at such homestead, as net income is defined by Georgia law, from all sources except as hereinafter provided, does not exceed $10,000.00 for the immediately preceding taxable year for income tax purposes. For the purposes of this section, net income shall not include income received as retirement, survivor, or disability benefits under the federal Social Security Act or under any other public or private retirement, disability, or pension system, except such income which is in excess of the maximum amount authorized to be paid to an individual under the federal Social Security Act; and income from such sources in excess of such maximum amount shall be included as net income for the purposes of this section. The amount of the exemption granted by this section shall be as follows:

(1) The exemption granted by this section shall be $6,000.00 of the assessed value of the homestead for the tax year beginning January 1, 1985;

(2) The exemption granted by this section shall be $7,000.00 of the assessed value of the homestead for the tax year beginning January 1, 1986; and

(3) The exemption granted by this section shall be $8,000.00 of the assessed value of the homestead for the tax year beginning January 1, 1987, and for all tax years thereafter.

(1984 Ga. Laws, page 3928, § 1; 1990 Ga. Laws, page 3790, § 1)

Section 2. [In lieu of county ad valorem taxation.]

The exemption granted by Section 1 of this Act shall be in lieu of and not in addition to the $4,000.00 exemption from county ad valorem taxation granted by the general provisions of the Constitution and laws of this state to persons who meet the age and income qualifications set out in Section 1 of this Act. If the amount of said exemption granted by the general provisions

of the Constitution and laws of this state is increased above the amount of the exemption granted by Section 1 of this Act, then such increased exemption shall apply rather than the exemption granted by Section 1 of this Act.
(1984 Ga. Laws, page 3926, § 2)

Section 3. [Taxes levied.]

The exemption granted by Section 1 of this Act shall not apply to or affect any taxes levied to retire bonded indebtedness, county taxes for school purposes, state taxes, or municipal taxes.
(1984 Ga. Laws, page 3926, § 3)

Section 4. [Eligibility.]

Any person who as of January 1, 1985, has applied for and is eligible for the $4,000.00 exemption from county ad valorem taxation granted by the general provisions of the Constitution and laws of this state to persons who meet age and income requirements corresponding to those set out in Section 1 of this Act shall be eligible for the exemption granted by Section 1 of this Act without applying therefor. Thereafter, application for the exemption granted by Section 1 of this Act shall be made in the same manner as the application for said exemption granted by the general provisions of the Constitution and laws of this state. It shall be the duty of any such person to notify the tax commissioner or tax receiver in the event such person becomes ineligible for the exemption granted by Section 1 of this Act.
(1984 Ga. Laws, page 3926, § 4)

Section 5. [Value of residence.]

The value of any residence in excess of the amount exempted by Section 1 of this Act shall remain subject to taxation.
(1984 Ga. Laws, page 3926, § 5)

Subdivision II. Primarily Occupied By Owner as a Residence in Homestead

Section 1. [Authorization.]

This Act is passed pursuant to article VII, section II, paragraph II of the constitution, authorizing the grant of homestead exemptions from ad valorem taxation levied by local taxing jurisdictions.
(1992 Ga. Laws, page 5389, § 1)

Section 2. [Definition.]

For purposes of this Act, the term "homestead" means homestead as defined and qualified in O.C.G.A. § 48-5-40.
(1992 Ga. Laws, page 5389, § 2)

Section 3. [Exemption amounts.]

(a) The homestead of each resident of Jones County actually occupied by the owner as a residence and homestead, and only so long as actually occupied by the owner primarily as such, is exempted from Jones County ad valorem taxes for county purposes, except taxes levied to pay interest on and to retire bonded indebtedness of the county, subject to the limits and conditions contained in this section and elsewhere in this Act. The exemption granted by this section shall not exceed the following amounts of the assessed value of the homestead for the tax years beginning in the following dates:

Tax Years Beginning	*Maximum Amount of Exemption*
January 1, 1993	$4,000.00
January 1, 1994	5,000.00
January 1, 1995 and thereafter	6,000.00

(b) The exemption granted by subsection (a) of this section shall be in lieu of and not in addition to any exemption from Jones County ad valorem taxes for county purposes which is lower in amount for any taxable year and which is granted by the provisions of the constitution and laws of this state. If the amount of any other exemption applicable to any resident is greater than or is increased to an amount greater than the amount of the exemption granted by subsection (a) of this section, then such exemption shall apply rather than the exemption granted by subsection (a) of this section.

(c) The exemption granted by subsection (a) of this section shall not apply to or affect any taxes levied to pay interest on or retire bonded indebtedness, state taxes, municipal taxes, or taxes levied on behalf of the board of education of Jones County.

(d) The value of any homestead in excess of the amount exempted by subsection (a) of this section shall remain subject to taxation.
(1992 Ga. Laws, page 5389, § 3)

Section 4. [Notification of ineligibility.]

Any person who as of January 1, 1993, has applied for and is eligible for the $2,000.00 exemption from county ad valorem taxation granted by the general provisions of the Constitution and laws of this state shall be eligible for the exemption granted by Section 3 of this Act without applying therefor. Thereafter, the exemption granted by Section 3 of this Act shall be claimed and returned as provided in O.C.G.A. § 48-5-50.1. It shall be the duty of any person to notify the tax commissioner in the event such person becomes ineligible for the exemption granted by this Act.
(1992 Ga. Laws, page 5389, § 4)

SPECIAL ACTS COMPARATIVE TABLE

GEORGIA LAWS

This table shows the location of the sections of the Georgia Laws and any amendments thereto.

Ga. Laws	Page	Section	Section this Special Acts
1945	637		Art. IV, Div. 2
1964	2169		Art. II, Div. 1
1967	2517	2	Art. II, § 6
1969	2150	3	Art. II, § 5
	4142		Art. IV, Div. 1, § 1
1974	2162		Art. I
1980	3621		Art. IV, Div. 3
1983	3830		Art. V, Div. 1
	4081		Art. IV, Div. 4
1984	3740	1	Art. IV, Div. 3, § 2
		2	Art. IV, Div. 3, § 4
	3743	1	Art. II, § 2, Art. II, § 3
		2	Art. II, § 4
	3926	2—5	Art. V, Div. 2, Subdiv. I, § 2— Art. V, Div. 2, Subdiv. I, § 5
	3928	1	Art. V, Div. 2, Subdiv. I, § 1
	4080	2	Art. V, Div. 1, § 7
	4459		Art. III, Div. 1
	5177	2, 3	Art. I, § 6, Art. I, § 7
		5	Art. I, § 9

Ga. Laws	Page	Section	Section this Special Acts
		6	Art. I, § 17
1987	4308	1	Art. I, § 16
1988	4878	1	Art. I, § 15A
1990	3790	1	Art. V, Div, 2, Subdiv. I, § 1
1992	5389	1, 2	Art. V, Div. 2, Subdiv. II, § 1, Art. V, Div. 2, Subdiv. II, § 2
		4	Art. V, Div. 2, Subdiv. II, § 4
1995	3809	1, 2	Art. III, Div. 1, § 1, Art. III, Div. 1, § 2
	3923		Art. III, Div. 2
	4131	1	Art. I, § 4
1996	3793	1	Art. I, § 16
1998	3765	1	Art. V, Div. 1, § 5
	3767	1	Art. IV, Div. 3, § 4
	3912	1	Art. I, § 8
		2	Art. I, § 15
	4048	1	Art. II, § 4
2004	4552		Art. I, § 10
			Art. I, § 13
			Art. I, § 15
			Art. I, § 15.(a)
2007	4202		Art. I, § 8
	4205		

SPECIAL ACTS COMPARATIVE TABLE

ORDINANCES

This table shows the location of the sections of the Ordinances and any amendments thereto.

Ordinance Number	Adoption Date	Section		Section this Special Acts
2009-003	1- 5-2010			Art. I, § 15
201511-10	12- 1-2015		Added	Art. I, § 15(B)

PART II

CODE OF ORDINANCES

Chapter 1

GENERAL PROVISIONS

Sec. 1-1. Adoption of Code; name.
Sec. 1-2. Incorporation of resolutions, etc.
Sec. 1-3. Form of Code; repository; maintenance.
Sec. 1-4. Definitions and rules of construction.
Sec. 1-5. Catchlines of sections; history notes and references.
Sec. 1-6. Severability of parts of Code.
Sec. 1-7. References to titles of officers, employees, public bodies.
Sec. 1-8. Interpretation of language.
Sec. 1-9. Grammatical interpretation.
Sec. 1-10. Acts by agent.
Sec. 1-11. Causing, permitting, abetting or concealing prohibited act.
Sec. 1-12. Construction of provisions.
Sec. 1-13. Affect of repeal or expiration of resolution.
Sec. 1-14. Matters not affected by Code.
Sec. 1-15. Provisions considered continuations of existing resolutions.
Sec. 1-16. Amendments to Code.
Sec. 1-17. Supplementation of Code.
Sec. 1-18. Altering Code.
Sec. 1-19. General penalty, continuing violations; authority granted to court.
Sec. 1-20. Liability for violations by corporations and other associations.

Sec. 1-1. Adoption of Code; name.

The codification of resolutions, general resolutions and ordinances passed by the board of commissioners is adopted as "The Code of Jones County, Georgia," and may be so cited. Such Code may also be cited as the "Jones County Code."

Sec. 1-2. Incorporation of resolutions, etc.

Any resolution, general resolution or ordinance not presently included in the Official Code of Jones County, Georgia, and passed subsequent to the preparation of such codification is automatically included and incorporated in this Code by reference.

Sec. 1-3. Form of Code; repository; maintenance.

A copy of the Code of Jones County, Georgia, shall be kept on file in the office of the clerk to the board of commissioners, preserved in looseleaf form, or in such other form as the clerk may consider most expedient. It shall be the express duty of the clerk or someone authorized by the clerk to insert in their designated places all resolutions, general resolutions and ordinances which indicate the intention of the board of commissioners to make such resolutions, general resolutions and ordinances a part of The Code of Jones County, Georgia, when the same have been printed or reprinted in page form, and to extract from the Code of Jones County, Georgia, all provisions which may be from time to time repealed by the board of commissioners. This copy of the Code of Jones County, Georgia, shall be available for all persons desiring to examine the Code and shall be considered the Code of Jones County, Georgia.

Sec. 1-4. Definitions and rules of construction.

In the construction of this Code and of all resolutions and ordinances, the following definitions and rules of construction shall be observed, unless such construction would be inconsistent with the manifest intent of the board of commissioners or the context clearly requires otherwise.

Board of commissioners. The term "board of commissioners" means the board of commissioners of Jones County, Georgia.

Bond. When a bond is required, an undertaking in writing shall be sufficient.

Code. The term "Code" means The Code of Jones County, Georgia, as designated in section 1-1.

Commissioner. The term "commissioner" means one or more members of the board of commissioners.

Computation of time. Except as otherwise provided by time period computations specifically applying to other laws, when a period of time measured in days, weeks, months, years or other measurements of time except hours is prescribed for the exercise of any privilege or the discharge of any duty, the first day shall not be counted but the last day shall be counted; and,

if the last day falls on Saturday or Sunday, the party having such privilege or duty shall have through the following Monday to exercise the privilege or to discharge the duty. When the last day prescribed for such action falls on a public and legal holiday as set forth in O.C.G.A. § 1-4-1, the party having the privilege or duty shall have through the next business day to exercise the privilege or to discharge the duty. When the period of time prescribed is less than seven days, intermediate Saturdays, Sundays and legal holidays shall be excluded in the computation.

County. The terms "this county" and "the county" mean the County of Jones, State of Georgia.

County clerk. Unless otherwise specifically provided, the term "county clerk" means the person employed by the board of commissioners to fulfill the duties of clerk of the board of commissioners as then defined.

Day. The term "day" means a calendar day of 24 hours.

Delegation of authority. Whenever a provision appears requiring the head of a department of the county to do some act or make certain inspections, it is to be construed to authorize the head of the department to designate, delegate and authorize subordinates to perform the required act or make the required inspection unless the terms of the provision or section designate otherwise.

Joint authority. All terms giving joint authority to three or more persons or officers shall be construed as giving such authority to a majority of such persons or officers, except when such words are used to grant authority to the board of commissioners.

Keeper and *proprietor*. The terms "keeper" and "proprietor" mean and include persons, firms, associations, corporations, receivers, trustees, personal representatives, clubs and partnerships, whether acting by themselves or through a servant, agent or employee.

Law. The term "law" means and denotes applicable federal law, the constitution and statutes of the State of Georgia, the resolutions of the county, and, when appropriate, any and all rules and regulations which may be promulgated thereunder.

May. The term "may" is permissive.

Month. The term "month" means a calendar month.

Must. The term "must" is mandatory.

Names of officers, and departments. The name or title of any officer or department shall be read as though the words "of Jones County" were added thereto.

Nontechnical and technical words. Terms and phrases shall be construed according to the common and approved usage of the language, but technical words and phrases and such others as may have acquired a peculiar and appropriate meaning in law shall be construed and understood according to such meaning.

Oath. The term "oath" shall be construed to include an affirmation in all cases in which, by law, an affirmation may be substituted for an oath, and in such cases the terms "swear" and "sworn" shall be equivalent to the terms "affirm" and "affirmed."

O.C.G.A. The abbreviation "O.C.G.A." means the Official Code of Georgia Annotated.

Or, and. The term "or" may be read "and," and the term "and" may be read "or," if the sense requires it.

Owner. The term "owner," applied to a building or land shall include any part owner, joint owner, tenant in common, joint tenant or tenant by the entirety, of the whole or a part of such building or land.

Penal resolutions, ordinances. The rules of construction and definitions of words as contained in the penal code of the state, insofar as they can be made applicable, are hereby adopted as governing the penal ordinances or resolutions of the county.

Person. The term "person" shall include a natural person, corporation, firm, partnership, association, organization, club, company, business, trust and any other group acting as a unit, or the manager, lessee, agent, servant, officer or employee of any of them, as well as an individual.

Personal property. The term "personal property" shall include every species of property except real property.

Preceding and *following.* The terms "preceding" and "following" mean next before and next after, respectively.

Premises. Whenever the term "premises" is used, it means place or places.

Property. The term "property" includes real and personal property.

Public place. The term "public place" means any park, cemetery, schoolyard or open space adjacent thereto, or any area available and/or accessible to the public, regardless of whether privately or publicly owned.

Real property. The term "real property" shall include lands, tenements and hereditaments.

Residence. The term "residence" shall be construed to mean the place adopted by a person as his place of habitation, and to which, whenever he is absent, he has the intention of returning. When a person eats at one place and sleeps at another, the place where such person sleeps shall be deemed his residence.

Road and *street.* The term "road" and "street" shall include all roads, streets, highways, avenues, lanes, alleys, courts, places, squares, curbs, or other public ways in this county which have been or may hereafter be dedicated and open to public use, or such other public property so designated in any law of this state.

Schedule of fees and charges. The term "schedule of fees and charges" means the official consolidated list maintained in the county clerk's office which lists rates for occupation taxes, utility or other public enterprises, fees of any nature, deposit amounts and various charges as determined from time to time by the board of commissioners.

Seal. The term "seal" means the county seal.

Shall. The term "shall" is mandatory.

Sheriff. The term "sheriff" means the sheriff of Jones County, Georgia.

Sidewalk. The term "sidewalk" means any portion of a street between the curbline and the adjacent property line, intended for the use of pedestrians, but shall not include any unimproved areas between the curbline and improved walkways.

Signature and *subscription.* The terms "signature" and "subscription" shall include a mark when the person cannot write.

State. The terms "this state" and "the state" mean the State of Georgia.

Tenant. The terms "tenant" and "occupant" applied to a building or land, shall include any person who occupies the whole or a part of such building or land, whether alone or with others.

Week. The term "week" shall be construed to mean a calendar week of seven days.

Written and *in writing.* The terms "written" and "in writing" include printing and any other mode of representing words and letters.

Year. The term "year" means a calendar year.

State law references—Computation of time, O.C.G.A. § 1-3-1; construction of definitions, O.C.G.A. § 1-3-2; meaning of certain words, O.C.G.A. § 1-3-3.

Sec. 1-5. Catchlines of sections; history notes and references.

The catchlines of sections in this Code printed in boldface type, italics or otherwise are intended as mere catchwords to indicate the contents of the section, and shall not be deemed or taken to be titles of such sections, nor as any part of the section, nor, unless expressly so provided, shall they be so deemed when any of such sections, including the catchlines, are amended or reenacted. The history notes appearing in parentheses after each section and the references and editor's notes scattered throughout the Code are for the benefit of the user of the Code and shall have no legal effect.

State law reference—Notes and catchlines of Code sections not part of law, O.C.G.A. § 1-1-7.

Sec. 1-6. Severability of parts of Code.

It is hereby declared to be the intention of the board of commissioners that the sections, paragraphs, sentences, clauses and phrases of this Code are severable, and if any phrase, clause, sentence, paragraph or section of this Code shall be declared unconstitutional by the valid judgment or decree of any court of competent jurisdiction, such unconstitutionality shall not affect any of the remaining phrases, clauses, sentences, paragraphs and sections of this

Code, since the same would have been enacted by the board of commissioners without the incorporation in the Code of any such unconstitutional phrase, clause, sentence, paragraph or section.

State law reference—Severability, O.C.G.A. § 1-1-3.

Sec. 1-7. References to titles of officers, employees, public bodies.

Use of the title of any officer, employee, department, board or commission means that officer, employee, department, board or commission of the county.

Sec. 1-8. Interpretation of language.

All words and phrases shall be construed according to the common and approved usage of the language, but technical words and phrases and such others as may have acquired a peculiar and appropriate meaning in the law shall be construed and understood according to such peculiar and appropriate meaning.

Sec. 1-9. Grammatical interpretation.

The following grammatical rules shall apply in the resolutions and ordinances of the county unless it is apparent from the context that a different construction is intended:

(1) *Gender.* Each gender includes the masculine, feminine and neuter genders.

(2) *Singular and plural.* The singular number includes the plural and the plural includes the singular.

(3) *Tenses.* Words used in the present tense include the past and the future tenses and vice versa, unless manifestly inapplicable.

Sec. 1-10. Acts by agent.

When an act is required by resolution or ordinance, the act being such that it may be done as well by an agent as by the principal, such requirement shall be construed to include all such acts performed by a designated agent.

Sec. 1-11. Causing, permitting, abetting or concealing prohibited act.

Whenever in the resolutions or ordinances of the county any act or omission is made unlawful, it shall include causing, allowing, permitting, aiding, abetting, suffering or concealing the fact of such act or omission.

Sec. 1-12. Construction of provisions.

The provisions of the resolutions or ordinances of the county and all proceedings under them are to be construed with a view to effect their objects and to promote justice.

Sec. 1-13. Affect of repeal or expiration of resolution.

(a) The repeal of a resolution or ordinance, or its expiration by virtue of any provision contained therein, shall not affect any right accrued or any offense committed, any penalty or punishment incurred or any proceeding commenced before the repeal took effect or the resolution expired and shall not repeal the repealing clause of a resolution or revive any resolution or ordinance which has been repealed thereby.

(b) When a resolution or ordinance which repealed another shall itself be repealed, the previous resolution or ordinance shall not be revived without express words to that effect.

Sec. 1-14. Matters not affected by Code.

Nothing in this Code or the resolution or ordinance adopting this Code shall be construed to repeal or otherwise affect the validity of any of the following:

(1) Any offense or act committed or done or any penalty or forfeiture incurred or any contract or right established or accruing before the effective date of this Code.

(2) Any resolution or ordinance promising or guaranteeing the payment of money for the county or authorizing the issuance of any bonds of the county or any evidence of the county's indebtedness.

(3) Any contract or obligation assumed by the county.

(4) Any resolution or ordinance fixing the salary of any county officer or employee.

(5) Any right or franchise granted by the county.

(6) Any resolution or ordinance dedicating, naming, establishing, locating, relocating, opening, widening, paving, etc., any street or public way in the county.

(7) Any appropriation resolution or ordinance.

(8) Any resolution or ordinance which, by its own terms, is effective for a stated or limited term.

(9) Any resolution or ordinance providing for local improvements and assessing taxes for such improvements.

(10) Any zoning resolution or ordinance.

(11) Any resolution or ordinance dedicating or accepting any subdivision plat.

(12) Any resolution or ordinance describing or altering the boundaries of the county.

(13) The administrative resolutions or ordinances of the county not in conflict or inconsistent with the provisions of this Code.

(14) Any resolution or ordinance levying or imposing taxes not included in this Code.

(15) Any resolution or ordinance establishing or prescribing street grades in the county.

No such resolution or ordinance shall be construed to revive any resolution or ordinance or part thereof that has been repealed by a subsequent resolution or ordinance which is repealed by this chapter. All such resolutions or ordinances are hereby recognized as continuing in full force and effect to the same extent as if set out at length in this Code.

Sec. 1-15. Provisions considered continuations of existing resolutions.

The provisions appearing in this Code, so far as they are the same as resolutions or ordinances adopted prior to this Code and included in such Code, shall be considered as continuations thereof and not as new enactments.

Sec. 1-16. Amendments to Code.

(a) All resolutions or ordinances passed subsequent to this Code which amend, repeal or in any way affect this Code may be numbered in accordance with the numbering system of this Code and printed for inclusion in this Code. In the case of repealed chapters, sections and subsections or any part thereof, by subsequent resolutions or ordinances, such repealed portions may be excluded from the Code by omission from reprinted pages affected thereby. The subsequent resolutions or ordinances as numbered and printed or omitted, in the case of repeal, shall be prima facie evidence of such subsequent resolutions or ordinances until such time that this Code and subsequent resolutions or ordinances numbered or omitted are readopted as a new Code by the board of commissioners.

(b) Amendments to any of the provisions of this Code may be made by amending such provisions by specific reference to the section number of this Code.

(c) If a new section not heretofore existing in the Code is to be added, the following language may be used: "That The Code of Jones County, Georgia, is hereby amended by adding a section (or article or chapter) to be numbered_____, which section reads as follows: . . . " The new section may then be set out in full as desired.

(d) All sections, articles, chapters or provisions desired to be repealed should be specifically repealed by section, article or chapter number, as the case may be.

Sec. 1-17. Supplementation of Code.

(a) By contract or by county personnel, supplements to this Code shall be prepared at least on an annual basis. A supplement to the Code shall include all substantive, permanent and general parts of resolutions or ordinances passed by the board of commissioners during the period covered by the supplement and all changes made thereby in the Code. The pages of a supplement shall be so numbered that they will fit properly into the Code and will, where necessary, replace pages which have become obsolete or partially obsolete, and the new pages shall be so prepared that, when they have been inserted, the Code will be current through the date of the adoption of the latest resolution or ordinance included in the supplement.

(b) In preparing a supplement to this Code, all portions of the Code which have been repealed shall be excluded from the Code by the omission thereof from reprinted pages.

(c) When preparing a supplement to this Code, the codifier (meaning the person authorized to prepare the supplement) may make formal, nonsubstantive changes in resolutions and parts of resolutions included in the supplement, insofar as it is necessary to do so to embody them into a unified Code. For example, the codifier may:

(1) Organize the resolution or ordinance material into appropriate subdivisions.

(2) Provide appropriate catchlines, headings and titles for sections and other subdivisions of the Code printed in the supplement, and make changes in such catchlines, headings and titles.

(3) Assign appropriate numbers to sections and other subdivisions to be inserted in the Code and, where necessary to accommodate new material, change existing section or other subdivision numbers.

(4) Change the words "this resolution" or words of the same meaning to "this chapter," "this article," "this division," etc., as the case may be, or to "sections _____ to _____ " (inserting section numbers to indicate the sections of the Code which embody the substantive sections of the resolution or ordinance incorporated into the Code).

(5) Make other nonsubstantive changes necessary to preserve the original meanings of resolution or ordinance sections inserted into the Code; but in no case shall the codifier make any change in the meaning or effect of resolution material included in the supplement or already embodied in the Code.

Sec. 1-18. Altering Code.

It shall be unlawful for any person in the county to change or amend by additions or deletions any part or portion of this Code, or to insert or delete pages, or portions thereof, or to alter or tamper with such Code in any manner whatsoever which will cause the law of the county to be misrepresented thereby, unless so authorized by resolution or ordinance or other official act of the board of commissioners. Any person violating this section shall be punished as provided in section 1-19.

State law reference—Altering, falsifying or stealing public records unlawful, O.C.G.A. § 45-11-1.

Sec. 1-19. General penalty, continuing violations; authority granted to court.

(a) O.C.G.A. § 36-1-20 gives the board of commissioners, for the purpose of protecting and preserving the public health, safety and welfare, authorization to adopt resolutions and ordinances for the governing and policing of the unincorporated areas of the county, violations of which resolutions and ordinances may be punished by fine or imprisonment or both.

(b) The Georgia General Assembly, in 1991, amended O.C.G.A. § 36-1-20, relating to resolutions and ordinances for governing and policing unincorporated areas of the county, so as to increase the maximum fine from $500.00 to $1,000.00.

(c) O.C.G.A. § 36-1-20 gives jurisdiction over violations of county resolutions and ordinances to the magistrate court of the county.

(d) O.C.G.A. § 36-1-20 is hereby incorporated as a part of The Code of Jones County, Georgia.

(e) Whenever in this Code or in any resolution or ordinance of the county any act is prohibited or is made or declared to be unlawful or an offense, or whenever in this Code or any resolution or ordinance the doing of any act is required and the failure to do such act is declared to be unlawful, and no specific penalty is provided therefor, and unless otherwise provided by state law, the violation of any such provision of this Code or any such resolution or ordinance shall be punished by a fine not to exceed $1,000.00 and imprisonment in the county prison or in the county jail, and work and labor on the streets or public works of the county, whether within or without the corporate limits, not exceeding 180 days or both a fine and sentence of imprisonment and labor; and all sentences may be in the alternative and fines may be imposed with the alternative of sentence to imprisonment and labor if the fines are not paid. Each day any violation of this Code or any violation of any resolution or ordinance shall continue, shall constitute a separate offense.

(f) The judge of the magistrate court shall have the power and authority to:

(1) Impose upon persons convicted in the magistrate court the fines provided for in this Code, the resolutions and ordinances of the county, or as otherwise provided by law, with the alternative of other punishment allowed by law, if such fines are not paid;

(2) Sentence such person to community service work; or

(3) Impose a sentence consisting of any combination of the penalties provided for in this section.

(g) The judge of the magistrate court shall have full power and authority to declare the forfeiture of bonds given by offenders for their appearance before the court upon the offender's failure to appear as provided for in such bond. The procedure for the forfeiture of such bonds shall be as is provided for the forfeiture of bonds and recognizance set forth in O.C.G.A. § 17-6-70 et seq.

State law references—Imposition of additional penalty for certain drug offenses, O.C.G.A. § 15-21-100; imposition of additional penalty for offense of driving under the influence of alcohol or drugs, O.C.G.A. § 15-21-112; additional penalty to be imposed in criminal and traffic cases to provide training to law enforcement officers and prosecuting officials, O.C.G.A. § 15-21-73 et seq.; additional penalty assessments for jail construction and staffing, O.C.G.A. § 15-21-93; punishment for misdemeanors generally, O.C.G.A. § 17-10-3; display of driver's license for violations of laws pertaining to traffic and motor vehicles, O.C.G.A. § 17-6-11; payments to peace officers annuity and benefit fund from revenues collected from fines and fees, O.C.G.A. § 47-17-60 et seq.; alternative punishments for violations involving a traffic offense, O.C.G.A. § 17-10-3(e).

Sec. 1-20. Liability for violations by corporations and other associations.

(a) Any violation of this Code by any officer, agent or other person acting for or employed by any corporation or unincorporated association or organization, while acting within the scope of his office or employment, shall in every case also be deemed to be a violation by such corporation, association or organization.

(b) Any officer, agent or other person acting for or employed by any corporation or unincorporated association or organization shall be subject and liable to punishment as well as such corporation or unincorporated association or organization for the violation by it of any provisions of this Code, where such violation was the act or omission, or the result of the act, omission or order, of any such person.

Chapter 2

ADMINISTRATION*

Article I. In General

Sec. 2-1. Records retention.
Secs. 2-2—2-30. Reserved.

Article II. Board of Commissioners

Division 1. Generally

Sec. 2-31. Chairman.
Sec. 2-32. Vice-chairman.
Sec. 2-33. Committees.
Sec. 2-34. Open meetings.
Sec. 2-35. Organizational meetings.
Sec. 2-36. Regular meetings.
Sec. 2-37. Special meetings and rescheduled regular meetings.
Sec. 2-38. Emergency sessions.
Sec. 2-39. Executive sessions.
Sec. 2-40. Quorum.
Sec. 2-41. Voting; majority.
Sec. 2-42. Abstentions.
Sec. 2-43. Agenda.
Sec. 2-44. Consent agenda.
Sec. 2-45. Minutes.
Sec. 2-46. Order of business.
Sec. 2-47. Decorum.
Sec. 2-48. Public participation.
Sec. 2-49. Amendments to rules.
Sec. 2-50. Suspending the rules of order.
Sec. 2-51. Visual and sound recordings.
Secs. 2-52—2-70. Reserved.

***Cross references—**Any resolution or ordinance promising or guaranteeing the payment of money for the county or authorizing the issuance of any bonds of the county or any evidence of the county's indebtedness saved from repeal, § 1-14(2); any contract or obligation assumed by the county saved from repeal, § 1-14(3); any administrative resolutions or ordinances of the county not in conflict or inconsistent with the provisions of this Code saved from repeal, § 1-14(13); civil emergencies, ch. 26; board of governors, § 30-68; administration of flood damage prevention, § 42-66 et seq.; historic preservation commission, § 50-31 et seq.; taxation, ch. 66; board of tax assessors, § 66-31 et seq.; waters and sewers, ch. 74; zoning administration, app. A, art. XI.

State law references—Claims against counties, O.C.G.A. § 36-11-1 et seq.; provisions applicable to counties and municipalities, O.C.G.A. § 36-60-1 et seq.; provisions applicable to counties and municipalities, O.C.G.A. § 36-80-1 et seq.; home rule for counties, Ga. Const. art. IX, § II, ¶ I; supplemental powers of municipalities and counties, Ga. Const. art. IX, § II, ¶ III.

Division 2. Parliamentary Procedure

Sec. 2-71. Rules of procedure.
Sec. 2-72. Parliamentarian.
Sec. 2-73. Main motion.
Sec. 2-74. Debate.
Sec. 2-75. Voting; procedure.
Sec. 2-76. Ranking of motions.
Sec. 2-77. Subsidiary motions.
Sec. 2-78. Privileged motions.
Sec. 2-79. Incidental motions.
Sec. 2-80. Supplementary main motions.
Secs. 2-81—2-100. Reserved.

Division 3. Legislation

Sec. 2-101. Legislative authority generally.
Sec. 2-102. Ordinances, resolutions, contracts and interlocal agreements.
Sec. 2-103. Preparation of ordinances.
Sec. 2-104. Required elements of ordinances.
Sec. 2-105. Introduction of ordinances, resolutions and other matters.
Sec. 2-106. Action restricted; emergencies.
Sec. 2-107. Reading of ordinances.
Sec. 2-108. Subject matter of ordinances.
Sec. 2-109. Adoption of ordinances, resolutions, contracts.
Sec. 2-110. Effective date of ordinances.
Secs. 2-111—2-140. Reserved.

Article III. Officers and Employees

Sec. 2-141. Personnel provisions not affected by Code.

Article IV. Purchases

Sec. 2-142. When price quotes or competitive bids required.

ARTICLE I. IN GENERAL

Sec. 2-1. Records retention.

(a) The county clerk is responsible for records management activities and shall act for and on behalf of the county in directing and coordinating all records management matters.

(b) No record of the county shall be destroyed except in accordance with approved retention schedules. The maintenance and security of all records referred to in this section shall be in the discretion of the county officer having responsibility for his respective office. However, the county clerk shall have final and ultimate control of such maintenance and security.
(Res. of 12-20-1983)

Secs. 2-2—2-30. Reserved.

ARTICLE II. BOARD OF COMMISSIONERS*

DIVISION 1. GENERALLY

Sec. 2-31. Chairman.

The chairman shall act as the chairman of the board of commissioners and is responsible for the orderly conduct of the meeting. In order to fulfill this duty, the chairman shall enforce the rules of procedure that are adopted by the board of commissioners. The chairman shall be impartial and conduct the meetings in a fair manner. The chairman may not introduce motions or second a motion except that the chairman may introduce or second a motion to go into executive session as authorized by section 2-39. The chairman shall not vote except to break a tie.

Sec. 2-32. Vice-chairman.

(a) At the first regular meeting in January of each four-year term of office, the board shall elect from its members a vice-chairman. The vice-chairman shall preside at board meeting in the absence of the chairman. In the event of a vacancy on the office of vice-chairman, the board shall elect a new vice-chairman to serve for the remainder of the unexpired term.

(b) If the chairman and vice-chairman are absent and a quorum is present, the remaining commissioners shall select a commissioner to serve as temporary chairman of the meeting until either the chairman or vice-chairman is present at the meeting.
(Ord. No. 2010-06, 8-17-2010)

***State law references—**County government generally, O.C.G.A. § 36-1-1 et seq.; requirement to prescribe the time, place and dates of regular meetings of governing authority, O.C.G.A. § 50-14-1(d); meetings to be open to public, O.C.G.A. § 50-14-1; exemptions from open meeting requirements, O.C.G.A. § 50-14-3.

Sec. 2-33. Committees.

The chairman, with the concurrence of the board of commissioners, may create committees of members of the board of commissioners to study any issue before the board of commissioners. Any such committees may make recommendations to the board, but no committee shall be empowered to make any final decision on any matter before it for consideration. In addition to commissioners, committees may include other county officials, staff or citizens at large. Whenever a committee is created, its duties, any litigation on the scope of its duties, and the times, places and periods of time for which the committee may operate shall be determined by the chairman with the concurrence of the board of commissioners. The chairman shall serve as an ex officio member of all committees.

Sec. 2-34. Open meetings.

All meetings of the board of commissioners shall be held in accordance with the provisions of O.C.G.A. § 50-14-1 et seq. The public shall at all times be afforded access to all meetings other than executive sessions.

Sec. 2-35. Organizational meetings.

The board of commissioners shall hold an organizational meeting on or before the second Monday in January. The meeting shall be called to order by the county clerk, and the oath of office shall be administered to the newly elected members of the board of commissioners whose terms of office shall begin the day and hour of taking the oath of office.

Sec. 2-36. Regular meetings.

Regular meetings of the board of commissioners shall be held on the first and third Tuesdays of each month. All regular meetings shall be held in the Charlotte C. Wilson Conference Room at the government center at a time of day as set by the board of commissioners. A notice containing the foregoing information shall be posted and maintained in a conspicuous place available to the general public at the regular meeting place of the board of commissioners.
(Ord. No. 2010-02, 8-17-2010)

Sec. 2-37. Special meetings and rescheduled regular meetings.

A regular meeting may be canceled, rescheduled or moved to a new location within the county by the chairman for any reason. Other special meetings may be called as provided by state law. Whenever a rescheduled regular meeting or any other special meeting is to be held at a time or place other than the regularly scheduled time or place, written notice of the change shall be posted for at least 24 hours at the place of the regular meetings. In addition, written or oral notice shall be given by the clerk at least 24 hours in advance of the meeting to either the legal organ of the county or a newspaper having a general circulation at least equal to that of the legal organ and to each member of the board of commissioners.

Sec. 2-38. Emergency sessions.

When emergency circumstances occur, the board of commissioners may hold a meeting with less than 24 hours' notice to the public. When such meetings are to be held, the clerk shall provide notice to the legal organ of the county or a newspaper with a general circulation at least equal to that of the legal organ and to each member of the board of commissioners as soon as possible. The notice shall include the subjects expected to be considered at the meeting. In addition, the minutes shall reflect the reason for the emergency meeting and the nature of the notice given to the media.

Sec. 2-39. Executive sessions.

(a) Executive sessions of the board of commissioners may be held for the purpose of conducting business excepted from public access requirements as authorized by O.C.G.A. §§ 50-14-2 and 50-14-3. Where a meeting of the board of commissioners is devoted in part to matters within the authorized exceptions to public access requirements, any portion of the meeting not subject to any such exceptions shall be open to the public. No executive session shall be held except pursuant to a majority affirmative vote of the board of commissioners taken in a public meeting.

(b) The minutes of the public meeting shall reflect the names of the commissioners present, those voting for the executive session and the specific reasons for the executive session. Minutes of the executive session may be maintained by the county clerk at the direction of the chairman. Any such minutes shall be maintained in a confidential file and shall not be subject to disclosure, except that disclosures of such portions of minutes identifying real estate to be acquired by the board of commissioners may only be delayed until such time as the acquisition of the real estate has been completed, terminated or abandoned or court proceedings have been initiated.

Sec. 2-40. Quorum.

A quorum must be present for conducting meetings of the board of commissioners. A quorum is a majority of all of the commissioners then in office. It is the duty of the chairman to enforce this rule. Any commissioner may raise a point of order directed to the chairman if he believes that a quorum is not present. If, during the course of a meeting, a commissioner leaves and a quorum no long exists, the meeting cannot continue. If a quorum is not attained within 30 minutes, the meeting will be rescheduled by the chairman with the approval of the commissioners present.

Sec. 2-41. Voting; majority.

Passage of a motion shall require the affirmative vote of a majority of commissioners present and voting at a meeting at which a quorum is present. Unless otherwise specified in these procedures, a majority shall mean more than half of the commissioners present excluding abstentions. If there is a tie vote, the chairman shall vote to break the tie.

Sec. 2-42. Abstentions.

A commissioner shall vote on all motions unless he has a conflict of interest that would prevent him from making a decision in a fair and legal manner. If a conflict of interest does exist, the commissioner shall explain for the record his decision to abstain on any vote.

Sec. 2-43. Agenda.

(a) The county clerk, with the advice of the chairman, commissioners and county administrator, shall prepare an agenda of subjects to be acted on for each meeting. Items included on the agenda shall have all required supporting documents as outlined in the agenda policy as adopted by the board of commissioners. The agenda shall be made available to the commissioners at least one business day before every board of commissioners' meeting.

(b) Any item requiring action to be taken by the board of commissioners shall be placed under the appropriate subsection of the agenda. Action may be taken under sections (4) planning and zoning requests, (5) visitors, (7) consent agenda, (8) old business, and (9) new business. Other sections are intended only for reporting purposes and comments. After receiving comments from the public, commissioners may revisit previously made motions and amend as needed.

(c) Agendas are closed on the third business day prior to the meeting. (Thursday for a Tuesday meeting).

(d) The order of the agenda may be changed during a meeting by the chairman or any commissioners by a majority vote of the board of commissioners. A new subject that was received by the county after the third business day prior to the meeting, and which becomes necessary to address during the course of a meeting, may be added to the agenda during a meeting by a majority vote of the board.

(e) A summary of the subjects acted on and those members present at a meeting must be written and made available to the public for inspection within two business days of the adjournment of any meeting.
(Ord. No. 2010-03, 8-17-2010)

Sec. 2-44. Consent agenda.

(a) A consent agenda may be prepared by the county clerk for the board of commissioners to unanimously adopt motions on routine items. Any items of business that are expected to receive unanimous approval and where no debate is expected may be placed on a consent agenda.

(b) At the appropriate time of the meeting, the chairman shall read all of the items on the consent agenda. If a commissioner objects to an item being on the consent agenda, the chairman shall move that particular item to the regular agenda. Following the reading of the consent agenda, the chairman will ask for unanimous approval of the items on the consent agenda. If there are no objections, all the items on the consent agenda will be adopted by unanimous consent.

Sec. 2-45. Minutes.

(a) The county clerk shall promptly record the minutes for each board of commissioners' meeting. The minutes serve as the official written record of the board of commissioners' meeting and shall be open for public inspection once approved as official by the board of commissioners but in no case later than immediately following the next regular meeting of the board of commissioners. The minutes shall specify the names of commissioners present at the meeting, a description of each motion or other proposal made at the meeting, the commissioner who proposed each motion, the commissioner who seconded each motion, and a record of all votes. In the case of a roll call vote, the name of each commissioner voting for or against a proposal shall be recorded. It shall be presumed that a commissioner has voted in the affirmative unless the minutes show otherwise. More detailed information may be included in the minutes at the request of the board of commissioners.

(b) The board of commissioners must approve the minutes before they can be considered as an official record of the board of commissioners. A copy of the minutes from the previous meeting shall be distributed to the commissioners at least one business day before the following meeting. The minutes of the previous meeting shall be corrected and approved by the board of commissioners at the beginning of each meeting. A majority vote is required for approval. Conflicts about the content of the minutes shall be decided by majority vote. Upon being approved, the minutes shall be signed by the chairman and attested to by the county clerk.

Sec. 2-46. Order of business.

All regular board of commissioners' meetings shall follow an established order of business. The order is as follows:

(1) Call to order.

(2) United States flag pledge and voluntary prayer.

(3) Approval of agenda.

(4) Planning and zoning hearing; (First Tuesday only).

(5) Approval of minutes.

(6) Visitors.

(7) Consent agenda.

(8) New business.

(9) Old business.

(10) Department heads.

(11) Commissioner committee reports.

(12) Citizen comments.

(13) Commissioner's comments.

(14) Adjournment.
(Ord. No. 2010-05, 8-17-2010)

Sec. 2-47. Decorum.

(a) All commissioners must conduct themselves in a professional and respectful manner. All remarks should be directed to the chairman and not to individual commissioners, staff or citizens in attendance. Personal remarks are inappropriate. A commissioner is not allowed to speak at a meeting until he has been recognized by the chairman. All comments made by a commissioner shall address the motion that is being discussed.

(b) The chairman shall enforce these rules of decorum. If a commissioner believes that a rule has been broken, he can raise a point of order; a second is not required. The chairman can rule on the question or he may allow the board of commissioners to debate the issue and decide the issue by majority vote.

Sec. 2-48. Public participation.

Public participation in meetings of the board of commissioners shall be permitted in accordance with the provisions of this section.

(1) *Visitors.* All members of the public who wish to address the board of commissioners must call the county clerk or county administrator at least three business days before the next meeting and submit their name, contact information, and the topic of their comments. These individuals will be allotted three minutes to make their comments and their comments must be limited to their chosen topic. These limits can be waived by a majority vote of the board of commissioners. Inclusion on the agenda is subject to the approval of the chairman of the board of commissioners.

(a) At the time that the county clerk, county administrator, or commissioner makes record of a request from the public to be placed on the agenda, the individual's name and contact information must be recorded to allow the clerk to provide notice of the Chairman's decision for inclusion/exclusion on the agenda and to provide notice of any change in date, time or location of the meeting.

(b) The agenda shall be limited to three visitors. Any visitors requesting to be placed on an agenda once the limit has been reached may be placed on the following agenda.

(c) Visitors that will need more than the allotted time to speak may request a call meeting for the board of commissioners to hold a work session on the topic. Work sessions requested by a citizen may be approved at the discretion of the chairman of the board of commissioners or by a majority of the commissioners. (Also see Special Acts, Section 9 page SA: 9 of this Code book on called meetings).

(2) *Public participation on agenda items.* A sign-in sheet will be posted at the meeting for the public who wish to address the board of commissioners at a meeting. They will be limited to three minutes for comments and may only speak once. There shall be a limit

of five speakers allowed under the citizens' comments section of the agenda. These limits may be waived by a majority vote of the board of commissioners. Anyone wishing to speak at any board of commissioners' meeting must be recognized by the chairman before addressing the board of commissioners.

(3) *Decorum.* Members of the public shall not make inappropriate or offensive comments at a board of commissioners' meeting and are expected to comply with the rules of decorum that are established for commissioners. Individuals who violate any rules of the board of commissioners may be ruled out of order by the chairman or parliamentarian. An individual who violates the rules of decorum may be removed from the meeting at the direction of the chairman or the parliamentarian.

(4) *Public hearings.* The board of commissioners may schedule public hearing for the purpose of soliciting public comment on any subject of interest to the board of commissioners. Hearings may be held immediately prior to or following a meeting of the board of commissioners, or at such other places and times as the board of commissioners may determine. No official action shall be taken at any such public hearing.

(Ord. No. 2010-04, 8-17-2010)

Sec. 2-49. Amendments to rules.

Any amendments to the rules of order must be submitted by a commissioner in writing to the county clerk three business days before a regular meeting of the board of commissioners. The proposed amendment shall be included in the agenda for that meeting and distributed to all commissioners. All amendments require a majority vote of the board of commissioners to be adopted.

Sec. 2-50. Suspending the rules of order.

Rules of order may be suspended in the case of an emergency. A motion to suspend the rules requires a second, is debatable and requires a majority vote of the board of commissioners. Rules governing quorum, voting methods and requirements, the notification to commissioners of meetings, and rules necessary for compliance with state law cannot be suspended.

Sec. 2-51. Visual and sound recordings.

Visual and/or sound recordings may be permitted for all public meetings.

Secs. 2-52—2-70. Reserved.

DIVISION 2. PARLIAMENTARY PROCEDURE

Sec. 2-71. Rules of procedure.

Unless otherwise provided in this Code, procedures for meetings of the board of commissioners shall follow an edition of Robert's Rules of Order, Newly Revised prescribed by the chairman.

Sec. 2-72. Parliamentarian.

The county attorney shall serve as the parliamentarian for board of commissioners' meetings.

Sec. 2-73. Main motion.

In order for the board of commissioners to take any official action on any subject, a commissioner must propose a main motion. A proposed main motion will not be recognized by the chair until another commissioner agrees to second the motion. A second does not require the commissioner seconding the motion to support the motion. A commissioner may withdraw a main motion that he has made at any time before the board of commissioners has voted on that motion.

Sec. 2-74. Debate.

(a) After the main motion is recognized by the chair, the board of commissioners shall debate the motion. The debate shall be managed by the chairman in a manner that is fair to all members of the board of commissioners. Commissioners may participate in the debate only when they are recognized by the chairman.

(b) During the course of debate, commissioners may introduce subsidiary motions that propose that the board of commissioners take a particular action on a motion. There are two classes of subsidiary motions: debatable subsidiary motions and undebatable subsidiary motions. Debatable subsidiary motions consist of motions to postpone indefinitely, amend, refer to committee, and postpone to a time certain. Debatable subsidiary motions require a second before they can be voted on or debated. There are three undebatable subsidiary motions: limit debate, vote immediately, and lay on the table; they require a second and cannot be debated.

(c) Commissioners may also introduce privileged motions. Privileged motions facilitate the running of the meeting and can be introduced during the course of debate. Privileged motions consist of a motion to raise a question of privilege and motions to recess and adjourn. The motions to recess and adjourn require a second. Debate is not allowed on privileged motions.

Sec. 2-75. Voting; procedure.

Voting on debatable motions and voting on undebatable motions shall take place in accordance with the following provisions:

(1) *Debatable motions.* In the case of debatable motions, the vote can be proposed in one of two ways:

a. If debate has been completed and no other commissioner wishes to speak, the chair can call for the vote. If there are no objections, then the chair can proceed with the vote;

b. If the chairman calls for the vote and there is an objection, a member of the board of commissioners may move to vote immediately ("move the previous question"). If this motion is seconded and approved by a two-thirds vote, debate will stop. The chairman will then read the proposed motion to the board of commissioners and ask for the votes of the commissioners.

(2) *Undebatable motions.* In the case of undebatable motions, the vote shall occur immediately after the motion is recognized by the chair. The chairman shall read the proposed motion to the board of commissioners and then call for the vote.

Sec. 2-76. Ranking of motions.

(a) Each subsidiary and privileged motion is assigned a specific rank. A motion of higher precedence can interrupt a motion of lower precedence. The higher motion must be decided before the board of commissioners returns to consider the motion of lower precedence.

(b) A main motion has the lowest rank and does not take precedence over any other motion. A motion to adjourn has the highest rank and will take precedence over all other subsidiary and privileged motions. The order of precedence of motions shall be in accordance with this section. Motions at the bottom of the following list take precedence over motions at the top of the list.

(1) Main motion (lowest rank).

(2) Subsidiary motions (debatable):

a. Postpone indefinitely;

b. Amend;

c. Refer to committee (commit);

d. Postpone to a time certain (postpone definitely).

(3) Subsidiary motions (undebatable):

a. Limit debate or extend limits;

b. Vote immediately (previous question);

c. Lay on the table (postpone temporarily)).

(4) Privileged motions (undebatable):

a. Question of privilege;

b. Recess;

c. Adjourn (highest rank).

Sec. 2-77. Subsidiary motions.

During the course of debate, commissioners may introduce motions that propose that the board of commissioners take a particular action on a main motion. These motions are called subsidiary motions and they allow a board of commissioners to reach a conclusion on the main motion. Subsidiary motions require a second before they can be voted on or debated. Three subsidiary motions: amend, limit debate and vote immediately, also may apply to other subsidiary motions.

(1) *Postpone indefinitely.* If a commissioner believes that the main motion should not be considered by the board of commissioners, that commissioner may move to postpone the consideration of the main motions indefinitely. If the motion is successful, consideration of the main motion stops and the main motion is tabled. A motion to postpone indefinitely may be debated, but it cannot be amended. A majority vote is required for the motion to pass.

(2) *Amend.* If a commissioner believes that a main motion that is on the table should be changed in order to make it more acceptable, he can move to amend the motion.

a. Amendments must be closely related to the original motion and must not change the nature of the motion that they amend.

b. Motions to refer, amend, postpone to a time certain and the motion to recess can also be amended.

c. A motion cannot be amended more than two times.

d. Debate is allowed on a motion to amend only if the original motion is debatable.

e. A majority vote is required for the board of commissioners to adopt an amendment.

f. If the amendment is adopted, then the board of commissioners shall consider the amended version of the motion.

(3) *Refer to a committee (commit).* If a commissioner believes that further information is needed before the board of commissioners can act on a main motion, he may propose that the motion be referred to a specific committee or department for further study. If an appropriate committee does not already exist, then a committee may be formed as

a part of the motion. A motion to refer should specify the date that the committee or department will report back to the board of commissioners. This motion is debatable and amendable. A majority vote is required for the motion to pass.

(4) *Postpone to a time certain (postpone definitely).* A motion to postpone to a certain time may be proposed if a commissioner believes that the main motion should not be considered until a future time. This motion shall set a particular time for the main motion to be considered again. It is debatable and can be amended. If this motion is passed, the chairman will bring the original motion back to the board of commissioners for consideration at the specified time. A majority vote is required for the motion to pass.

(5) *Limit debate or extend limits.* A motion to limit debate places a time constraint on the length of debate. The details of such a motion are to be decided by the commissioner who makes the motion. This motion can also be used to extend the limits of debate if a limit on debate already exists. Debate is not allowed on this motion and a two-thirds vote is required.

(6) *Vote immediately (previous question).* If a commissioner believes that the motion that is being considered should be voted on, the commissioner may move to vote immediately. The motion is undebatable and a vote of two-thirds of the board of commissioners is required for the motion to pass.

(7) *Lay on the table (postpone temporarily).* A motion to lay on the table proposes that the consideration of a main motion be postponed until a later time in the meeting. The motion can be brought up for consideration only if a motion to resume consideration is accepted by the board of commissioners during the same meeting. The motion will die if it is not taken up during the meeting. Debate is not allowed on this motion and the motion is not amendable. A majority vote is required for the motion to pass.

Sec. 2-78. Privileged motions.

Privileged motions facilitate the running of the meeting. They do not address or relate to a main motion and can be introduced whether or not there is a main motion under consideration. Privileged motions take precedence over all subsidiary motions. Debate is not allowed on these motions:

(1) *Question of privilege.* A formal question addressed to the chair concerning the rights of a commissioner or of the board of commissioners as a whole is referred to as a question of privilege. It does not require a second and cannot be debated or amended. The chair is required to make a ruling on the question.

(2) *Recess.* A motion to recess proposes that the meeting be suspended for a particular amount of time. The motion must specify the length of the recess. The motion must also be seconded. Debate is not allowed on this motion but the motion can be amended. A majority vote is required for the motion to pass.

(3) *Adjourn.* In order for a meeting to come to a close, a commissioner must make a motion to adjourn. The motion to adjourn has the highest rank of any motion; and as a result, it can be introduced at any time. The motion requires a second, but is not debatable or amendable. A majority vote is required for the motion to pass.

Sec. 2-79. Incidental motions.

Incidental motions allow commissioners to exert their rights as a member of the board of commissioners. Incidental motions can be introduced at any time during a meeting.

(1) *Appeal.* If a commissioner disagrees with a decision that is made by the chair, that commissioner may appeal the decision. If the appeal is seconded, the appeal will be considered by the board of commissioners. The chair has the opportunity to explain the ruling that has been challenged. The board of commissioners may then debate the appeal. The board of commissioners shall decide by majority vote if the chair's decision is to be upheld or overturned. An appeal is high in precedence and can only be interrupted by a privileged motion or by a motion to lay on the table.

(2) *Parliamentary inquiry.* If a commissioner has a question about the rules of order, he may ask the chair to give an opinion on that question. This question should take the form of a parliamentary inquiry and should relate to the current business of the board of commissioners. This motion takes precedence over all motions except privileged motions. This motion does not require a second and is not debatable or amendable.

(3) *Point of order (question of order).* If a commissioner believes that a violation of the rules of parliamentary procedure has occurred, he can raise a point of order. A second is not required. The chair can make a ruling on the question or can allow the board of commissioners to debate and then rule on the question by majority vote. A point of order can only be interrupted by a privileged motion or a motion to lay on the table.

(4) *Point of information (request for information).* If a commissioner has a question about the facts of a particular issue that is being considered, he may ask a point of information. This motion is addressed first to the chair and then to the appropriate person. A second is not required and the motion is not debatable or amendable.

Sec. 2-80. Supplementary main motions.

Three motions allow the board of commissioners to act on a main motion that has either been passed or tabled by the board of commissioners. These motions are considered to be main motions but differ from usual main motions in the ways specified.

(1) *Reconsider.* The motion to reconsider allows the board of commissioners to debate whether or not to overturn a decision made at the meeting that is in progress. It allows the board of commissioners to consider new information that may affect the decision that has already been made. Any commissioner may make a motion to reconsider and any commissioner may second the motion. The motion is debatable but it cannot be

amended. A majority vote of the board of commissioners is required for the motion to pass. If a motion to reconsider is passed, the original decision will be voided and the board of commissioners will return to debate and revote the original motion.

(2) *Rescind.* A motion to rescind proposes that the board of commissioners overturn a motion passed at a previous meeting. A motion to rescind can be made by any commissioner. It is in order as long as the original motion has not been implemented. An announcement of the intention to rescind a motion may be made at the meeting where the decision was made, or the commissioner seeking to rescind may place the matter on the agenda for the next meeting pursuant to section 2-43. The motion to rescind will then be placed on the agenda for the next meeting. At the next meeting, the motion to rescind will formally be made. If it is seconded, then the board of commissioners shall debate and vote on rescission. A majority vote is required for the motion to pass. If a motion to rescind is passed, the original decision will be voided.

(3) *Resume consideration.* The motion to resume consideration allows the board of commissioners to consider a motion that has been temporarily postponed. This motion requires a second and is not debatable or amendable. It is a main motion but ranks higher than any debatable motion. A majority vote is required for the motion to pass.

Secs. 2-81—2-100. Reserved.

DIVISION 3. LEGISLATION*

Sec. 2-101. Legislative authority generally.

The board of commissioners shall exercise the legislative functions of the county, and may pass any ordinance or resolution that it deems best for the government of the county; however, such ordinance or resolution is not in conflict with state law, the state constitution, or the constitution or the laws of the United States.

Sec. 2-102. Ordinances, resolutions, contracts and interlocal agreements.

Unless otherwise provided in this Code, all ordinances, resolutions, contracts and interlocal agreements of the county shall be prepared, approved, introduced and adopted in the manner provided in this division.

Sec. 2-103. Preparation of ordinances.

Whenever possible, all ordinances shall be prepared by the county attorney.

***State law references—**Board of commissioners authorized to adopt ordinances for the governing and policing of the unincorporated areas of the county, O.C.G.A. § 36-1-20(a); counties a body corporate and politic, Ga. Const. art. IX, § I, ¶ I.

Sec. 2-104. Required elements of ordinances.

All ordinances passed by the board of commissioners shall contain the following items, which shall be set forth in the ordinance in the following order:

(1) Ordinance number.

(2) Title and purpose.

(3) Enacting clause.

(4) Body of ordinance by sections.

(5) Severability clause.

(6) Penalty clause.

(7) Repealing clause.

(8) Adoption date.

(9) Effective date.

(10) Authentication of county clerk.

Sec. 2-105. Introduction of ordinances, resolutions and other matters.

Ordinances, resolutions and other matters of subjects requiring action by the board of commissioners must be introduced and sponsored by a member of the board of commissioners.

Sec. 2-106. Action restricted; emergencies.

No ordinance shall be put on its final passage on the same day on which it is introduced, except that where an emergency exists and public health and safety require it, an ordinance containing a full statement of the facts and reasons for the emergency may be made effective upon its adoption, if approved by the board of commissioners.

Sec. 2-107. Reading of ordinances.

Each ordinance shall be read at two consecutive meetings of the board of commissioners. This subsection may be waived by two-thirds of those voting upon the question of waiver.

Sec. 2-108. Subject matter of ordinances.

No ordinance shall relate to more than one subject, which shall be clearly expressed in its title; and no ordinance, or section of such ordinance, shall be amended or repealed unless the new ordinance contains the title of the ordinance or section amended or repealed. When practicable, all ordinances shall be introduced as amendments to this Code.

Sec. 2-109. Adoption of ordinances, resolutions, contracts.

An ordinance, resolution or contract shall be deemed adopted or approved when it receives an affirmative vote of a majority of the whole board of commissioners.

Sec. 2-110. Effective date of ordinances.

No ordinance shall take effect until ten days after its adoption unless deemed an emergency measure, in which case the ordinance shall take effect immediately.

Secs. 2-111—2-140. Reserved.

ARTICLE III. OFFICERS AND EMPLOYEES*

Sec. 2-141. Personnel provisions not affected by Code.

Nothing in this Code or in the ordinance adopting this Code shall affect any ordinance relating to the county's personnel classification system, employee pay plan, retirement plan, or employee benefits. All such ordinances are hereby recognized as continuing in full force and effect to the same extent as if set out in this Code.

ARTICLE IV. PURCHASES

Sec. 2-142. When price quotes or competitive bids required.

(a) *Definitions.* For the purpose of this subchapter, the following definitions shall apply unless the context clearly indicates or requires a different meaning.

(1) *Bid, quote* or *proposal most advantageous to the county.* A bid, quote, or proposal chosen on the basis of a variety of considerations including price, quality of merchandise, suitability of merchandise, and service reputation of the vendor, and therefore may not necessarily mean the lowest bid received. (2) *Field purchases.* An informal purchase of supplies needed urgently for an ongoing or in-process county operation in an amount less than $200.00.

(3) *Formal bid* or *proposal process.* A process whereby the county develops a set of specifications that is made available to potential vendors through the county website and the Georgia Local Government Access website.

***Cross references—**Any resolution or ordinance fixing the salary of any county officer or employee saved from repeal, § 1-14(4); designated animal control officer, authority, § 14-3; director of emergency management agency, § 26-72.

State law references—Employment of additional temporary personnel and equipment for assistance of county officers or departments authorized, O.C.G.A. § 36-1-11; county manager authorized, O.C.G.A. § 36-5-22; code of ethics for government service, O.C.G.A. § 45-10-1 et seq.; Fair Employment Practices Act of 1978, O.C.G.A. § 45-19-20 et seq.

(4) *Informal quotes, bids* or *proposals.* Quotes, bids or proposals obtained by contacting experienced reputable vendors directly. Informal quotes, bids or proposals may be either oral or written depending upon the purchase amount.

(b) *Appropriation required.*

(1) No county employee shall make any purchase or allow any purchase to be made until an appropriation therefor has been approved by the county commission as part of the annual operating budget of the county or as prescribed in this subchapter.

(2) The county commission must approve and authorize the purchase of any supplies or services which are not a part of or exceed the annual operating budget of the county or a specified department's operating budget.

(c) *Purchase orders and purchase limits.*

(1) Purchase orders and approvals.

a. A purchase order number must be obtained before placing orders and making purchases with the following exceptions: utilities, attorneys' fees, and engineering fees. Purchase order numbers shall only be issued after submission of a completed and authorized purchase order request form. For purchases that involve vehicle or equipment repair, department heads shall make every effort to obtain an approximate cost through a diagnostic assessment. In cases of vehicle or equipment repair where the approximate repair cost cannot be ascertained through a diagnostic assessment, a purchase order shall be created before the repair work begins and then amended once the repair cost is determined

b. In the event of a field purchase, a department head shall complete a purchase order request form as soon as practicable, but in no event more than two days after the purchase, and the purchase order request shall contain information as to the nature of the situation that necessitated the purchase.

c. Purchasing approvals and processes are divided into the following five categories and are summarized on the chart below:

1. $0.00—$999.99:

i. Approvals required: Department head.

ii. Purchase order required: Yes

iii. Quote/bid/proposal requirement: One informal quote, bid or proposal.

iv. Form of quote, bid or proposal: Oral or written.

v. Notice required: None.

2. $1,000.00—$4,999.99:

i. Approvals required: Department head.

ii. Purchase order required: Yes.

iii. Quote/bid/proposal requirement: Two or more informal quotes, bids or proposals.

iv. Form of quote, bid or proposal: Written.

v. Notice required: None.

3. $5,000.00—$9,999.99:

i. Approvals required: Department head and county administrator.

ii. Purchase order required: Yes.

iii. Quote/bid/proposal requirement: Three or more informal quotes, bids or proposals.

iv. Form of quote, bid or proposal: Written.

v. Notice required: None.

4. $10,000.00 and above:

i. Approvals required: Department head, county administrator, and board of commissioners.

ii. Purchase order required: Yes.

iii. Quote/bid/proposal requirement: Formal bid or proposal process.

iv. Form of quote, bid or proposal: Written.

v. Notice required: Legal Organ, County website and Georgia Local Government Access website.

d. Chart.

Amount	*Purchase Order Required*	*Approvals*	*Quote/Bid/Proposal Requirement*	*Form*	*Notice*
$0.00—$999.99	Yes	Department Head	1 quote	Oral or Written	n/a
$1,000.00—$4,999.99	Yes	Department Head	Minimum 2 quotes	Written	n/a
$5,000.00—$9,999.99	Yes	Department Head and County Administrator	Minimum 3 quotes	Written	n/a
$10,000.00 and above	Yes	Department Head, County Administrator, and Board of Commissioners	Formal Bid/RFP Process	Written	Legal Organ, County Website, and GLGA Website

e. Purchases shall not be divided for the purposes of evading more stringent requirements.

f. Jones County assumes no liability for purchases made without following the established purchasing procedures.

(d) *Exceptions to bid, quote, and proposal requirements.*

(1) The following are exceptions to the normal quote, bid and proposal requirements although the appropriate approvals must still be obtained as outlined above:

a. Purchases made through or under a statewide contract where the item has been competitively bid by an entity such as the Georgia Department of Administrative Services.

b. Purchases made through a collaborative entity that has previously bid the item such as U.S. Communities.

c. Purchases made pursuant to an intergovernmental agreement.

d. Single-source purchases where only one vendor or product can provide the needed good or service.

e. Professional service providers including, but not limited to, engineers, attorneys, and consultants.

f. Field purchases subject to the restrictions outlined above.

(2) The county administrator may waive bid, quote and proposal requirements for purchases of $9,999.99 or less in cases of emergency or when a purchase is inappropriate for competitive bidding due to the nature of the item, time constraints or other factors.

(3) The board of commissioners, via a formal vote of a majority of a quorum assembled in a regular or called meeting, may waive bid, quote and proposal requirements for purchases of $10,000.00 or more in cases of emergency or when a purchase is inappropriate for competitive bidding due to the nature of the item, time constraints or other factors.

(e) *Purchase of name-brand goods or services.*

(1) A department head may elect a purchase of a brand-name product or service when the goods compromise a major system, program, or service previously selected due to operational effectiveness, future enhancements or additions, or maintenance and storage of spare parts precludes the mixing of brands, manufacturers, and the like.

(f) *Further negotiations.*

(1) Once a contract is bid and awarded by County officials in accordance with this subchapter, the county reserves the right to further negotiate all terms of the contract if the county determines that it is in the county's best interest to do so without the necessity of rebidding any contract; provided, however, that any negotiations permitted hereunder shall not result in a variance of price terms exceeding 20 percent of the original price.

(g) *Procedure for informal bidding.*

(1) When informal quotes, bids or proposals are a permitted method of procurement, department heads or their designee may procure goods and services by contacting vendors directly.

(2) The number of quotes, bids or proposals required is governed by the purchase amount as outlined above.

(3) The county reserves the right to determine whether quotes, bids or proposals are the appropriate means of procuring a good or service.

(4) In all cases, the quote, bid or proposal most advantageous to the county shall be selected.

(5) The county reserves the right to reject any or all bids and to waive technicalities.

(h) *Procedure for formal bidding.*

(1) When formal bids or quotes are the required method of procurement, the county administrator or his or her designee shall prepare an invitation for bids or proposals that clearly describes the needed goods or services and specifies the date and time by which the bid or proposal must be submitted.

(2) The invitation for bids or proposals shall be publicized through the county's legal organ, the county's website and through the Georgia Local Government Access website for a minimum of ten calendar days. The ten-day period shall begin to run on the date that the advertisement appears in the legal organ. At the discretion of the department head or county administrator, the invitation may also be sent directly to known interested vendors.

(3) Unless specified in the bid or proposal invitation, a formal bid or proposal opening is not required.

(4) The county reserves the right to determine whether bids or proposals are the appropriate means of procuring a good or service.

(5) In all cases, the quote, bid or proposal most advantageous to the county shall be selected.

(6) The county reserves the right to reject any or all bids or proposals and to waive technicalities.

(i) *Administration of competitive bids or proposals.*

(1) The county shall keep a record of all bids, quotes or proposals submitted as required by applicable open records laws and the records shall be opened to proper inspection by any person.

(2) Tied quotes, bids or proposals shall be resolved by the county administrator except that if the price exceeds $10,000.00, the county commission shall resolve the tie.

(3) The county reserves the right to accept or reject any or all bids, to investigate the qualifications of any bidder, and to waive or not waive any and all technicalities or informalities in the bids or proposals when making an award.

(4) The county retains custody of all quotes, bids and proposals submitted to the county.

(j) *Authority to determine policies.*

(1) The county administrator shall have the authority to promulgate policies to implement this subchapter.

(Ord. No. 2014-11-20, 11-18-2014; Ord. No. 201711-ao, § 1, 11-21-2017)

Chapters 3—5

RESERVED

Chapter 6

ALCOHOLIC BEVERAGES*

Article I. In General

Sec. 6-1. Definitions.
Sec. 6-2. Use in business promotions prohibited.
Sec. 6-3. Open containers.
Secs. 6-4—6-30. Reserved.

Article II. Beer and Wine

Division 1. Generally

Sec. 6-31. Sale to minors.
Sec. 6-32. Posting of notice to minors.
Sec. 6-33. Sale prohibited on Christmas Day.
Sec. 6-34. Sales on election days.
Sec. 6-35. Hours of operation—Generally.
Sec. 6-36. Sales hours.
Sec. 6-37. Knowledge of article provisions.
Sec. 6-38. Compliance with applicable laws.
Secs. 6-39—6-60. Reserved.

Division 2. License

Sec. 6-61. Required.
Sec. 6-62. Application required.
Sec. 6-63. Completion of application.
Sec. 6-64. Execution of application.
Sec. 6-65. Reserved.
Sec. 6-66. Proximity to certain uses.
Sec. 6-67. Grounds for denial.
Sec. 6-68. Application approval.
Sec. 6-69. Payment of fees.
Sec. 6-70. Search of premises.
Sec. 6-71. Display.
Sec. 6-72. Transferability.
Sec. 6-73. License year; expiration.
Sec. 6-74. Fees, proration.
Sec. 6-75. Grounds for suspension or revocation.
Sec. 6-76. Surrender upon revocation.
Sec. 6-77. Waiting period upon suspension, revocation.

***Cross reference—**Businesses and business regulations, ch. 22.

State law references—Georgia Alcoholic Beverage Code, O.C.G.A. § 3-1-1 et seq.; authority to adopt rules and regulations relating to manufacture, sale and distribution of distilled spirits, O.C.G.A. § 3-4-49; local license required for wholesale or retail sales of wine, O.C.G.A. § 3-6-40.

ARTICLE I. IN GENERAL

Sec. 6-1. Definitions.

The following words, terms and phrases, when used in this chapter, shall have the meanings ascribed to them in this section, except where the context clearly indicates a different meaning:

Beer means fermented beverages made in whole or in part from malt, or any similar fermented beverage, provided such fermented beverages shall not contain more than six percent of alcohol by volume.

Package store license means a license issued to a retail dealer for the sale of beer or wine, in sealed containers, for consumption off the premises, generally known as sale of beer or wine to go.

Pouring license means a license issued to a retail dealer for the sale of beer or wine for consumption on the premises of the retail dealer.

Retail dealer means any person selling beer or wine directly to the consumers.

Wine means any alcoholic beverage containing not more than 21 percent alcohol by volume made from fruits, berries, or grapes either by natural fermentation or by natural fermentation with brandy added. The term includes, but is not limited to, all sparkling wines, champagnes, combinations of such beverages, vermouths, special natural wines, rectified wines, and like products. The term does not include cooking wine mixed with salt or other ingredients so as to render it unfit for human consumption as a beverage. A liquid shall first be deemed to be a wine at that point in the manufacturing process when it conforms to the definition of wine contained in this section.
(Res. of 11-3-1987, § 1.1)

Cross reference—Definitions generally, § 1-4.

Sec. 6-2. Use in business promotions prohibited.

No beer, wine or other alcoholic beverage shall be given away, sold or otherwise distributed as part of any business or product promotion, or grand opening of any such business. This prohibition shall apply to all businesses and individuals in the county, whether or not they are licensed to sell beer or wine.
(Res. of 11-3-1987, § 2.1)

Sec. 6-3. Open containers.

(a) As used in this Code section, the term:

(1) *Alcoholic beverage* means:

a. Beer, ale, porter, stout, and other similar fermented beverages, including sake or similar products, of any name or description containing one-half of one percent or more of alcohol by volume, brewed or produced from malt, wholly or in part, or from any substitute therefor;

b. Wine of not less than one-half of one percent of alcohol by volume; or

c. Distilled spirits which is that substance known as ethyl alcohol, ethanol, or spirits of wine in any form, including all dilutions and mixtures thereof from whatever source or by whatever process produced.

(2) *Open alcoholic beverage container* means any bottle, can, or other receptacle that:

a. Contains any amount of alcoholic beverage; and

b. (i) Is open or has a broken seal; or

(ii) Is otherwise ready for consumption; or

(iii) The contents of which are partially removed.

(3) *Open container* means any bottle, can, glass, cup or other vessel which contains an alcoholic beverage not in its original container. The term "open container" shall also mean the original container of an alcoholic beverage and which contains an alcoholic beverage on which the seal has been broken or which is otherwise ready for consumption.

(4) *Semipublic parking facility* means any privately owned area wherein motor vehicles may be parked by the public in conjunction with any business, enterprise, commercial establishment, office building, church, school, or multiple-family residential building.

(b) It shall be unlawful for any person to have in his or her possession any alcoholic beverage in an open container while on the public streets, roads, sidewalks, alleyways or rights-of-way, in any public or semipublic parking facility within Jones County, Georgia.

(c) It shall be unlawful for any person to have in his or her possession any alcoholic beverage in an open container while at a private residence or curtilage held in private ownership, other than his or her own, other than by invitation of the owner or lawful occupant.

(d) It shall be unlawful for any person to have in his or her possession any alcoholic beverages in any open container while an occupant of any motor vehicle, whether such vehicle is underway or not, while such vehicle is on the public streets, sidewalks or rights-of-way, or in any public or semipublic parking facility within Jones County. An open container shall be considered to be in the possession of the operator of a vehicle if the container is not in the possession of a passenger or is not located in a locked glove compartment, locked trunk or other locked nonpassenger area of the vehicle.

(e) This section shall not apply to facilities or events sanctioned or approved by the board of commissioners as facilities or events where alcohol may be served.

(f) This section may be suspended for special events upon application to and approval by the board of commissioners.

(g) Any person convicted of a violation of this section shall be punished as provided in section 1-19.

(Ord. No. 2009-004, 1-5-2010)

Secs. 6-4—6-30. Reserved.

ARTICLE II. BEER AND WINE

DIVISION 1. GENERALLY

Sec. 6-31. Sale to minors.

No licensee for the sale of beer or wine shall furnish or cause to be furnished or permit any person in his employ to furnish any beer or wine to any minor. The licensee shall be held responsible for any such sale made by his employees or others in the licensed business premises. The prohibition of this section includes the sale, gift or any other furnishing of beer or wine to minors, and minors are deemed to be persons under the age of 21 years as provided by state law.
(Res. of 11-3-1987, § 4.7)

Sec. 6-32. Posting of notice to minors.

The holder of any license for the sale of beer or wine shall post in a conspicuous place in his place of business a notice with letters not less than four inches in height which shall be clearly visible to all customers entering the establishment as follows:

"Sale of Beer or Wine to Minors is Strictly Prohibited."
(Res. of 11-3-1987, § 4.8)

Sec. 6-33. Sale prohibited on Christmas Day.

No licensee under this article, nor any person in his employ, shall furnish or sell or offer to sell any beer or wine on Christmas Day.
(Res. of 11-3-1987, § 4.9(a))

Sec. 6-34. Sales on election days.

(a) Pursuant to O.C.G.A. § 3-3-20, the sale of alcoholic beverages shall be permitted on election days as the same are defined by state law; provided, however, that it shall nonetheless be unlawful for any person to sell alcoholic beverages within 250 feet of any polling place or of the outer edge of any building within which such polling place is established on primary or election days.

(b) The provisions of subsection (a) of this section notwithstanding, no licensee who is licensed to sell beer or wine to be consumed on the premises or anyone in his employ shall furnish or sell or offer to sell any beer or wine on election days, defined as that period of time beginning one hour prior to the opening of the polls and ending one hour after the closing of the polls, during any primary, general or special election, and provided that this prohibition shall apply only within the territorial boundaries for which the election is being held; provided,

further, that any licensee who is licensed to sell beer or wine to be consumed on the premises also holds a license to sell beer or wine packaged to go may sell beer or wine packaged to go on election days, subject to the provisions of subsection (a) of this section.
(Res. of 11-3-1987, § 4.9(b); Res. of 6-7-1988)

Sec. 6-35. Hours of operation—Generally.

All such establishments shall be closed between the hours of 12:00 a.m., Sunday, until 7:00 a.m., Monday, with the following exception: If 75 percent of the gross sales of such establishment is derived from the sale of nonalcoholic merchandise, then such establishment may remain open on Sunday. The responsibility for keeping records which determine the percentage of gross sales shall lie upon the holders of the business license, and such records are subject to audit.
(Res. of 11-3-1987, § 3.4)

Sec. 6-36. Sales hours.

Licensees may engage in the sale of beer and wine, subject to the following:

(1) *Pouring licensees.* No holder of a pouring license shall engage in such sales between the hours of 12:00 midnight on Saturday night and 7:00 a.m. on the following Monday morning, nor between the hours of 2:00 a.m. and 7:00 a.m. on any day of the week.

(2) *Package store licensees.* The holder of a package store license may engage in package sales on Sundays between the hours of 12:30 p.m. and 11:30 p.m., but are otherwise prohibited from engaging in such sales between 12:00 midnight on Saturday night and 7:00 a.m. on the following Monday morning. Additionally, no holder of a package store license shall engage is such sales between the hours of 2:00 a.m. and 7:00 a.m. on any day of the week.

(3) *[Vacation of licensed premises.]* No later than one hour after the applicable closing time, all patrons and customers of any business licensed with a pouring license for beer or wine shall vacate the premises and the doors to such establishment shall be closed and locked; provided that this requirement shall not apply to those licensed businesses operating only with a package store license. The licensee shall be responsible for complying with these requirements.

(Ord. No. 2013-002, 8-20-2013)

Editor's note—Ord. No. 2013-002, adopted Aug. 20, 2013, amended § 6-36 by striking it in its entirety and inserting in lieu thereof new material to read as herein set out. Former § 6-36 pertained to hours of operation—pouring licensees, and derived from a resolution of Nov. 3, 1987.

Sec. 6-37. Knowledge of article provisions.

All holders of a license for the sale of beer and wine shall keep a copy of this article in his premises and instruct any person working there with respect to the terms in this article, and each licensee and each person selling wine or beer shall at all times be familiar with the terms of this article.
(Res. of 11-3-1987, § 4.11)

Sec. 6-38. Compliance with applicable laws.

In addition to the rules and regulations set out in this article, each licensee doing business in the county shall comply with all state and federal laws, and the violation of any of such laws and these regulations shall subject the licensee to the immediate revocation of his license for the sale of beer or wine.
(Res. of 11-3-1987, § 5.2)

Secs. 6-39—6-60. Reserved.

DIVISION 2. LICENSE

Sec. 6-61. Required.

No beer or wine shall be sold legally in the county outside the limits of incorporated municipalities, without a license granted by the board of commissioners.
(Res. of 11-3-1987, § 2.1)

Sec. 6-62. Application required.

All applications for licenses for the sale of beer or wine shall be filed in person by the applicant at the office of the board of commissioners, and shall consist of completed forms furnished for application purposes by the board of commissioners.
(Res. of 11-3-1987, § 2.2)

Sec. 6-63. Completion of application.

All applications for licenses for the sale of beer or wine on the forms provided by the board of commissioners shall be completely and fully executed and each question on the application form shall be answered accurately. Failure of an applicant to furnish completed answers, as well as failure to comply with all other prerequisites as provided in this article shall be cause for denying the application with prejudice. The willful making of any false statement as to a material matter on any application for a license to sell beer or wine which shall be found to be false shall constitute grounds for denying such license or for revocation of any license issued.
(Res. of 11-3-1987, § 2.3)

Sec. 6-64. Execution of application.

If the applicant for a license for the sale of beer or wine is an individual, he shall sign the application personally. If the applicant is a firm or partnership, each member or partner shall execute it. If the applicant is a corporation, it shall be executed by at least two officers of the corporation.
(Res. of 11-3-1987, § 2.4)

Sec. 6-65. Reserved.

Editor's note—At the instruction of the city, § 6-65 was deleted from the Code. See letter and attachment of Oct. 8, 2004 which states "This updated copy repeals the Residency clause § 6-65 from the ordinance passed November 3, 1987. Approved this 15th day of May, 1990."

The applicant for a license for the sale of beer or wine under this division must be a resident of the county for at least one year prior to the application date.
(Res. of 11-3-1987, § 2.5)

Sec. 6-66. Proximity to certain uses.

No application for any licenses to sell beer or wine shall be approved where the proposed location of the business is within 300 feet of a church, school, funeral home or cemetery. The distance prescribed in this section shall be measured in a straight line from the nearest corner of the building housing the business to the nearest corner of such church building or funeral home, or to the nearest corner of the school ground or cemetery grounds.
(Res. of 11-3-1987, § 3.1)

Sec. 6-67. Grounds for denial.

In determining whether or not any application for a license for the sale of beer or wine under this division shall be granted, in addition to all other provisions of this chapter, the following shall be considered by the board of commissioners in the public interest and welfare and no application shall be approved when it is found that:

(1) The applicant or any employee of the business is then afflicted with alcoholism or other clearly defined alcoholic beverage use problems, and no person known to the licensee to be so afflicted may at any time be employed by the licensee in the licensed business.

(2) The applicant or any employee of the business has at any time previously had a beer, wine or alcoholic beverage license revoked at any location, whether in the county, or otherwise.

(3) If it is found to be contrary to the public interest and welfare, no license shall be issued to any person convicted of a felony who served any part of a criminal sentence, including probation, within ten years immediately preceding the date of receipt of the application.

(4) If it is found to be contrary to the public interest and welfare, no license shall be issued to any person convicted of a misdemeanor who served any part of a criminal sentence, including probation, within five years immediately preceding the date of receipt of the application.

(Res. of 11-3-1987, § 3.2; Ord. No. 2012-001, 9-18-2012)

Sec. 6-68. Application approval.

After receipt of the application for a license for the sale of beer or wine under this division, and all other prerequisites set out in this chapter, the clerk shall consider the application, and if all criteria have been satisfied, shall present such application to the board of commissioners at their regularly scheduled monthly meeting for approval.
(Res. of 11-3-1987, § 3.3)

Sec. 6-69. Payment of fees.

No license for the sale of beer or wine shall be issued under this division unless the applicant therefor shall have fully paid all license fees and ad valorem taxes due to the county.
(Res. of 11-3-1987, § 4.1)

Sec. 6-70. Search of premises.

The acceptance by any licensee of any license for the sale of beer or wine issued under the authority of this division shall authorize the search, without warrant or other writ, by any police officer of the county, and by any operator, agent or officer of the state revenue commissioner, and by any operator, agent or officers of the alcohol control section of the United States of America, not only of the whole of the licensed location of such licensee, but also his dwelling house and the curtilage thereof.
(Res. of 11-3-1987, § 4.2)

Sec. 6-71. Display.

Every license for the sale of beer or wine granted and issued under and by this division shall be permanently displayed on the interior wall of the licensed location by the licensee.
(Res. of 11-3-1987, § 4.3)

Sec. 6-72. Transferability.

No license for the sale of beer or wine issued under this division shall be assignable or transferable. If a licensed business is moved, sold or closed or no longer directly operated by the licensee, the licensee shall immediately surrender his license to the clerk. All licenses shall be issued to specific persons and for a specific location.
(Res. of 11-3-1987, § 4.4)

Sec. 6-73. License year; expiration.

All licenses for the sale of beer or wine shall be issued on a calendar year basis and shall expire, regardless of the date of issuance, on the last day of December of each year.
(Res. of 11-3-1987, § 4.5)

Sec. 6-74. Fees, proration.

The fee for any license for the sale of beer or wine issued under this division shall be as set forth in the schedule of fees and charges on file in the office of the county clerk. The applicant

for a license shall pay to the county, at the time his license is issued, the sum of the license fee for operation for one year beginning on the first day of January or one-half of this amount if the license is issued during the last three months of the license year.
(Res. of 11-3-1987, § 4.6)

Sec. 6-75. Grounds for suspension or revocation.

The following shall be considered just cause for suspension or revocation of any license for the sale of beer or wine issued under this division:

(1) The performance of any act prohibited by this division or the failure to perform any act required by this division, as well as the violations of any state, local, or federal law, particularly, but not limited to those involving alcoholic beverages, if such violation tends to indicate that the licensee will not maintain the operation of the business licensed in conformity with state, local, or federal laws. If such act, omission or violation is done by any agent, servant, employee, or officer of the licensee, the lack of knowledge on the part of the licensee or the lack of authorization for such act or omission or violation shall be no defense.

(2) The entry of a plea of guilty or nolo contendere, or the conviction of any licensee, partner, or any officer of a licensee corporation with respect to a charge or violation of any of the laws of the state or United States or any locality particularly but not limited to those involving alcoholic beverages, if such violation tends to indicate that the licensee will not maintain the operation of the business licensed in conformity with state, local, or federal laws.

(3) The occurrence on three or more occasions within any 12-month period on the licensed premises of fights, disorderly conduct, drunkenness, breach of the peace, and other similar conduct whether the same be committed by the licensee or by customers or by others.

(Res. of 11-3-1987, § 5.1)

Sec. 6-76. Surrender upon revocation.

If any license for the sale of beer or wine is temporarily revoked by any officer of the county, including the sheriff, such license shall be turned over to the board of commissioners' office immediately, and such licensee shall appear before the board of commissioners at a regular meeting for consideration of permanent revocation or reinstatement.
(Res. of 11-3-1987, § 5.3)

Sec. 6-77. Waiting period upon suspension, revocation.

When a license has been suspended or revoked under the provisions of this division, no application for a new license for the same location will be received for a period of 12 months thereafter; and no application for a new license from the licensee involved shall be received for a period of 24 months.
(Res. of 11-3-1987, § 5.4)

Chapters 7—9

RESERVED

Chapter 10

AMUSEMENTS AND ENTERTAINMENTS*

Article I. In General

Secs. 10-1—10-30. Reserved.

Article II. Adult Entertainment Establishments

Sec. 10-31. Purpose.
Sec. 10-32. Definitions.
Sec. 10-33. Erotic dance establishment regulations.
Sec. 10-34. Certain activities prohibited.
Sec. 10-35. License required.
Sec. 10-36. Operation of unlicensed premises unlawful.
Sec. 10-37. Admission of minors unlawful.
Sec. 10-38. Sales to minors unlawful.
Sec. 10-39. Adult entertainment establishment employees.
Sec. 10-40. Application for license.
Sec. 10-41. Application contents.
Sec. 10-42. Applicant to appear.
Sec. 10-43. Application; investigation.
Sec. 10-44. Persons prohibited as licensees.
Sec. 10-45. License—Refusal; appeal.
Sec. 10-46. Same—Renewal.
Sec. 10-47. Change of location or name.
Sec. 10-48. Powers of hearing officer.
Sec. 10-49. Rules of evidence inapplicable.
Sec. 10-50. Hearing officer—Report.
Sec. 10-51. Same—Action by board of commissioners.
Sec. 10-52. Violations; penalty.
Sec. 10-53. Unlawful operation declared nuisance.
Sec. 10-54. Cleaning of licensed premises.
Sec. 10-55. Self-inspection of licensed premises.
Sec. 10-56. Sealing for unsanitary or unsafe conditions.
Sec. 10-57. Abatement as sanitary nuisance.
Sec. 10-58. License fee.

***Cross reference—**Businesses and business regulations, ch. 22.

State law reference—State licensing of coin-operated amusement machines, O.C.G.A. § 48-17-1 et seq.

ARTICLE I. IN GENERAL

Secs. 10-1—10-30. Reserved.

ARTICLE II. ADULT ENTERTAINMENT ESTABLISHMENTS*

Sec. 10-31. Purpose.

The purpose of this article is to regulate certain types of businesses including, but not limited to, adult entertainment establishments, to the end that the many types of criminal activities frequently engendered by such businesses (as demonstrated by the experiences of other municipalities including, but not limited to, Atlanta and Fulton County, Georgia; Seattle and Renton, Washington; New York, New York; Los Angeles, California; and Fort Lauderdale and Palm Beach, Florida) will be curtailed. However, it is recognized that such regulation cannot de facto approach prohibition. Otherwise, a protected form of expression would vanish. As to adult dance establishments, this article represents a balancing of competing interests: reduced criminal activity and protection of the surrounding neighborhoods through the regulation of adult entertainment establishments versus the protected rights of adult entertainment establishments and patrons.
(Ord. of 6-6-1993, § 1)

Sec. 10-32. Definitions.

The following words, terms, and phrases, when used in this article shall have the meanings ascribed to them in this section, except where the context clearly indicates a different meaning:

Adult bookstore means an establishment having a substantial or significant portion of its stock in trade, books, magazines or other periodicals which are distinguished or characterized by their emphasis on matter depicting, describing or relating to specified sexual activities or specified anatomical areas or an establishment with a segment or section, comprising five percent of its total floor space, devoted to the sale or display of such materials or five percent of its net sales consisting of printed materials which are distinguished or characterized by their emphasis on matter depicting, describing or relating to specified sexual activities or specified anatomical areas.

Adult dancing establishment means a business that features dancers displaying or exposing specified anatomical areas.

***Cross reference—**Comprehensive land development, app. A.

State law references—Giving massages in places used for lewdness, prostitution, assignation or masturbation for hire, O.C.G.A. § 16-6-17; giving of massages in place used for lewdness, prostitution or masturbation for hire, O.C.G.A. § 16-6-17; nudity and related acts on premises where alcoholic beverages are sold, O.C.G.A. § 3-3-40 et seq.; restriction of adult bookstores and movie houses to certain areas, O.C.G.A. § 36-60-3; establishment, maintenance or use of building, structure or place for unlawful sexual purposes, O.C.G.A. § 41-3-1.

Adult minimotion picture theater means an enclosed building with a capacity of less than 50 persons used for commercially presenting material distinguished or characterized by an emphasis on matter depicting or relating to specified sexual activities or specified anatomical areas for observation by patrons therein.

Adult motion picture arcade means any place to which the public is permitted or invited wherein coin-operated or slug-operated or electronically, electrically or mechanically controlled still or motion picture machines, projectors or other image-producing devices are maintained to show images to five or fewer persons per machine at any one time and where the images so displayed are distinguished or characterized by an emphasis on depicting or describing specified sexual activities or specified anatomical areas.

Adult motion picture theater means an enclosed building with a capacity of 50 or more persons used for presenting material distinguished or characterized by an emphasis on matter depicting, describing or relating to specified sexual activities or specified anatomical areas for observation by patrons therein.

Adult video store means an establishment having a substantial or significant portion of its stock in trade, video tapes or movies or other reproductions, whether for sale or rent, which are distinguished or characterized by their emphasis on matter depicting, describing or relating to specified sexual activities or specified anatomical areas or an establishment with a segment or section, comprising five percent of its total floor space, devoted to the sale or display of such material or which derives more than five percent of its net sales from videos which are characterized or distinguished by their emphasis on matter depicting, describing or relating to specified sexual activities or specified anatomical areas.

Erotic dance establishment means a nightclub, theater or other establishment which features live performances by topless and/or bottomless dancers, go-go dancers, strippers or similar entertainers, where such performances are distinguished or characterized by an emphasis on specified sexual activities or specified anatomical areas.

Escort bureau and introduction services mean any business, agency or persons who, for a fee, commission, hire, reward or profit, furnish or offer to furnish names of persons, or who introduce, furnish or arrange for persons who may accompany other persons to or about social affairs, entertainments or places of amusement, or who may consort with others about any place of public resort or within any private quarters.

Good moral character means a person is of good moral character according to this article if that person has not been convicted of a felony, or any crime not a felony if it involves moral turpitude, in the past five years. The county may also take into account such other factors as are necessary to determine the good moral character of the applicant or employee. Conviction shall include pleas of nolo contendere or bond forfeiture when charged with such crime.

Minor means any person who has not attained the age of 18 years.

Specified anatomical areas mean and shall include any of the following:

(1) Less than completely and opaquely covered human genitals or pubic region; buttock; or female breast below a point immediately above the top of the areola; or

(2) Human male genitalia in a discernibly turgid state, even if completely and opaquely covered.

Specified sexual activities means and includes any of the following:

(1) Actual or simulated sexual intercourse, oral copulation, anal intercourse, oral anal copulation, bestiality, direct physical stimulation of unclothed genitals, flagellation, or torture in the context of a sexual relationship, or the use of excretory functions in the context of a sexual relationship and any of the following sexually oriented acts or conduct; anilingus, buggery, coprophagy, coprophilia, cunnilingus, fellatio, necrophilia, pederasty, pedophilia, piquerism, sapphism, zooerastia;

(2) Clearly depicted human genitals in a state of sexual stimulation, arousal, or tumescence;

(3) Use of human or animal ejaculation, sodomy, oral copulation, coitus, or masturbation;

(4) Fondling or touching of nude human genitals, pubic region, buttocks, or female breast;

(5) Masochism, erotic, or sexually oriented torture, beating, or infliction of pain;

(6) Erotic or lewd touching, fondling, or other sexual contact with an animal by a human being; or

(7) Human excretion, urination, menstruation, vaginal or anal irrigation.

(Ord. of 6-6-1993, § 2)

Cross reference—Definitions generally, § 1-4.

Sec. 10-33. Erotic dance establishment regulations.

(a) No person shall advertise or cause to be advertised, an erotic dance establishment in the county without a valid adult entertainment establishment license issued pursuant to this article.

(b) No later than March 1 of each year, an erotic dance establishment licensee shall file a verified report with the license officer showing the licensee's gross receipts and amounts paid to dancers for the preceding calendar year.

(c) The license officer may inspect the licensee's establishment to assess compliance with the requirements of this article and all applicable sections of Appendix A to this Code at any time after providing written notice of the intended date of the inspection at least one week (seven calendar days) prior to the investigation.

(d) An erotic dance establishment licensee shall maintain and retain for a period of two years the names, addresses, and ages of all persons employed as dancers.

(e) No adult entertainment establishment licensee shall employ or contract with as a dancer a person under the age of 18 years or a person not licensed pursuant to this article.

(f) No person under the age of 18 years shall be admitted to an adult entertainment establishment.

(g) An erotic dance establishment may be open only between the hours of 8:00 a.m. and 2:00 a.m. Monday through Friday, and Saturday from 8:00 a.m. through 2:55 a.m. on Sunday. No licensee shall permit his place of business to be open on Christmas Day.

(h) No erotic dance establishment licensee shall serve, sell, distribute, or suffer the consumption or possession of any intoxicating liquor or controlled substance upon the premises of the licensee.

(i) An adult entertainment establishment licensee shall conspicuously display all licenses required by this article within the primary structure of the establishment.

(j) No dancer shall fondle or caress any patron, and no patron shall fondle or caress any dancer.

(k) No patron shall directly pay or give any gratuity to any dancer.

(l) No dancer shall solicit any pay or gratuity from any patron.

(m) Private dancing sessions or other erotic exhibitions on the adult entertainment establishment premises shall be prohibited.

(n) All areas of an establishment licensed under this article shall be fully lighted at all times patrons are present. Full lighting shall mean illumination equal to 3.5 footcandles per square foot.

(o) If any subsection of this section or its application to any person or circumstance is held invalid by a court of competent jurisdiction, the remainder or application to other persons or circumstances shall not be affected.
(Ord. of 6-6-1993, § 3)

Sec. 10-34. Certain activities prohibited.

No person shall publicly display or expose or suffer the public display or exposure, with less than a full opaque covering, of any portion of a person's genitals, pubic area, or buttocks in a lewd and obscene fashion. All signs or other forms of advertisement associated with a permitted adult entertainment establishment must comply with this requirement.
(Ord. of 6-6-1993, § 4)

Sec. 10-35. License required.

It shall be unlawful for any person to engage in, conduct, or carry on in or upon any premises within the county any of the adult entertainment establishments defined in this article

without a license to do so. No license so issued shall condone or make legal any activity thereunder if such activity is deemed illegal or unlawful under the laws of the state or the United States.
(Ord. of 6-6-1993, § 5)

Sec. 10-36. Operation of unlicensed premises unlawful.

It shall be unlawful for any person to operate an adult entertainment establishment defined in section 10-32, unless such business shall have a currently valid license or shall have made proper application for renewal within the time required thereof under this article, which license shall not be under suspension or permanently or conditionally revoked.
(Ord. of 6-6-1993, § 6)

Sec. 10-37. Admission of minors unlawful.

It shall be unlawful for an adult entertainment establishment licensee to admit or permit the admission of minors within a licensed adult entertainment establishment.
(Ord. of 6-6-1993, § 7)

Sec. 10-38. Sales to minors unlawful.

It shall be unlawful for any person to sell, barter, distribute, offer to sell, or give to any minor any service, material, device, or thing sold or offered for sale by any adult entertainment establishment defined in section 10-32 which clearly depicts any specified anatomical areas or promotes, instructs, or assists in the conduct of any specified sexual activities.
(Ord. of 6-6-1993, § 8)

Sec. 10-39. Adult entertainment establishment employees.

(a) *Qualifications.* Employees of an adult entertainment establishment shall not be less than 18 years of age. Every employee must be of good moral character as defined in section 10-32. Any employee who is convicted of a crime constituting a felony or a crime not a felony involving moral turpitude while employed at an adult entertainment establishment shall not thereafter work at any licensed premises for a period of five years from the date of such conviction, unless a longer time is ordered by a court of competent jurisdiction. The term "convicted" shall include an adjudication of guilt on a plea of guilty or nolo contendere or the forfeiture of a bond when charged with a crime, and the terms "employed on the licensed premises" and "work on any licensed premises" shall as well include work done or services performed while in the scope of employment elsewhere than on the licensed premises.

(b) *Approval for employment.* Before any person may work on a licensed premises, he must file a notice with the licensing officer of his intended employment on forms supplied by the licensing officer and shall receive approval of such employment from the licensing officer. The prospective employee shall supply such information as the licensing officer requires, including a set of fingerprints on regular county or United States Department of Justice forms. Upon approval, the employee may begin working on the licensed premises. If approval is denied, the

prospective employee may, within ten days of such denial, apply to the licensing officer for a hearing. The decision of the licensing officer after the hearing may be appealed to the board of commissioners of the county, which may issue such order as is proper on the premises. An investigation fee as set forth in the schedule of fees and charges on file in the office of the county clerk shall accompany the notice of intended employment or a receipt of the licensing officer evidencing the payment of such fee at the time the notice is filed.

(c) *Suspension, revocation of license.* Violation of the provisions of this article, the ordinances of the county, laws and regulations of the state, or the rules and regulations of the county shall subject an employee to suspension or revocation of his license.

(d) *Independent contractors.* For the purpose of this article, independent contractors shall be considered as employees and shall be licensed as employees, regardless of the business relationship with the owner or licensee of any adult entertainment establishment.
(Ord. of 6-6-1993, § 9)

Sec. 10-40. Application for license.

(a) Any person desiring to obtain a license to operate, engage in, conduct, or carry on any adult entertainment establishment shall make application to the chairman of the board of commissioners or his designated representative. Prior to submitting such application, a nonrefundable fee, established by resolution of the board of commissioners, shall be paid to the county clerk to defray, in part, the cost of investigation and report required by this article. The county clerk shall issue a receipt showing that such application fee has been paid in full. The receipt or a copy thereof shall be supplied to the chairman of the board of commissioners at the time the application is submitted.

(b) The application for such license does not authorize the engaging in, operation of, conduct of, or carrying on of any adult entertainment establishment.
(Ord. of 6-6-1993, § 10)

Sec. 10-41. Application contents.

Each application for an adult entertainment establishment license shall contain the following information:

(1) The full true name and any other names used by the applicant;

(2) The present address and telephone number of the applicant, including a telephone number at which the applicant may reasonably be expected to be reached during regular business hours if such number differs from the telephone number of the applicant's primary place of residence;

(3) The previous addresses of the applicant, if any, for a period of five years immediately prior to the date of the application and the dates of residence at each;

(4) Acceptable written proof that the applicant is at least 18 years of age;

(5) The applicant's true and current (where the two may be different) height, weight, color of eyes and hair, and date and place of birth;

(6) Two photographs of the applicant at least two inches by two inches in size taken within the last six months;

(7) Complete business, occupation, or employment history of the applicant for the five years immediately preceding the date of application. Business or employment records of the applicant, partners in a partnership, directors and officers of a corporation and, if a corporation, all shareholders holding more than five percent of the shares of corporate stock outstanding on the date of application;

(8) The business license history of the applicant and whether such applicant, in previous operations in this or any other city, state, or territory under license, has had such license for an adult entertainment business or similar type of business revoked or suspended, the reason therefor, and the business activity or occupation subsequent to such action of suspension or revocation;

(9) All convictions, including ordinance violations, exclusive of traffic violations, stating the dates and places of any such convictions;

(10) If the applicant is a corporation, the name of the corporation shall be set forth exactly as shown in its articles of incorporation or charter, together with the place and date of incorporation, and the names and addresses of each of the current officers and directors, and each stockholder holding more than five percent of the stock in the corporation on the date of application. If the applicant is a partnership, the applicant shall set forth the name, residence address, and dates of birth of the partners, including limited partners. If the applicant is a limited partnership, it shall furnish a copy of its certificate of limited partnership filed with the county clerk. If one or more of the partners is a corporation, the provisions of this subsection pertaining to corporations shall apply. The applicant corporation or partnership shall designate one of its officers or general partners to act as its responsible managing officer. Such designated person shall complete and sign all application forms required of an individual applicant under this article, but only one application fee shall be charged;

(11) The names and addresses of the owner and lessor of the real property upon which the business is to be conducted and a copy of the lease or rental agreement;

(12) Such other identification and information as the sheriff's department may require in order to discover the truth of the matters specified in this section as required to be set forth in the application;

(13) The age and date of birth of the applicant, of any partners, or of any and all officers, of any stockholders of more than five percent of the shares of the corporation stock outstanding on the date of application, directors of the applicant if the applicant is a corporation;

(14) If the applicant, any partners or any of the officers or stockholders holding more than five percent of the outstanding shares of the corporation on the date of application, or

the directors of the applicant if the applicant is a corporation, have ever been convicted of any crime constituting a felony, or any crime not a felony involving moral turpitude, in the past five years and, if so, a complete description of any such crime, including date of violation, date of conviction, jurisdiction and any disposition, including any fine or sentence imposed and whether terms of disposition have been fully completed;

(15) The county shall require the individual applicant to furnish fingerprints of the applicant;

(16) If the applicant is a person doing business under a trade name, a copy of the trade name properly recorded. If the applicant is a corporation, a copy of authority to do business in the state, including articles of incorporation, trade name affidavit, if any, and last annual report, if any;

(17) At least three character references from individuals who are in no way related to the applicant or individual shareholders, officers or directors of a corporation and who are not or will not benefit financially in any way from the application if the license is granted and who have not been convicted of any felony or a municipal code violation involving moral turpitude in the past five years. The licensing officer shall prepare forms consistent with the provisions of this subsection for the applicant, who shall submit all character references on such forms;

(18) Address of the premises to be licensed;

(19) Whether the premises are owned or rented and, if the applicant has a right to legal possession of the premises, copies of those documents giving such legal right;

(20) A plat by a registered engineer, licensed by the state, showing the location of the proposed premises in relation to the neighborhood, the surrounding zoning, its proximity to any protected use property identified in section 99.4 of appendix A to this Code or other business regulated under this article;

(21) Each application for an adult entertainment establishment license shall be verified and acknowledged under oath to be true and correct by:

a. If the applicant is an individual, the individual;

b. If by a partnership, the manager or general partner;

c. If a corporation, by the president of the corporation;

d. If any other organization or association, by the chief administrative official.

(Ord. of 6-6-1993, § 11)

Sec. 10-42. Applicant to appear.

The applicant, if an individual, or designated responsible managing officer, if a partnership or corporation, shall personally appear at the county and produce proof that a nonrefundable

application fee, established by resolution of the board of commissioners, has been paid and shall present the application containing the information as set forth and described in section 10-41.
(Ord. of 6-6-1993, § 12)

Sec. 10-43. Application; investigation.

The county shall have 30 days to investigate the application and the background of the applicant. Upon completion of the investigation, the board of commissioners may grant the license if it finds:

(1) The required fee has been paid in full;

(2) The application conforms in all respects to the provisions of this article and all other applicable codes and ordinances duly adopted by the county;

(3) The applicant has not knowingly made a material misrepresentation in the application;

(4) The applicant has fully cooperated in the investigation of his application;

(5) The applicant, if an individual, or any of the stockholders of the corporation, any officers or directors, if the applicant is a corporation, or any of the partners, including limited partners, if the applicant is a partnership, has not been convicted in a court of competent jurisdiction of an offense involving conduct or convicted of an attempt to commit any of the offenses in this section, or convicted in any state of any offense which, if committed or attempted in this state, would have been punishable as one or more of the offenses in this section, or any crime involving dishonesty, fraud, deceit, or moral turpitude;

(6) The applicant has not had an adult entertainment establishment license or other similar license denied or revoked for cause by the county or any other government located in or out of this state prior to the date of application;

(7) The building, structure, equipment, or location of such business as proposed by the applicant would comply with all applicable laws, including but not limited to health, zoning, distance, fire and safety requirements and standards;

(8) The applicant is at least 21 years of age;

(9) That the applicant, his employee, agent, partner, director, officer, stockholder, or manager has not, within five years of the date of application, knowingly allowed or permitted any of the specified sexual activities as defined in section 10-32 to be committed or allowed in or upon the premises where such adult entertainment establishment is to be located or to be used as a place in which solicitations for the specified sexual activities as defined in section 10-32 openly occur;

(10) That on the date the business for which a license is required under this article commences, and thereafter, there will be a responsible person on the premises to act as manager at all times during which the business is open;

(11) That the proposed premises will not be located too close to any protected use property identified in section 99.4 of appendix A to this Code or other business regulated under this article;

(12) That the grant of such license will not cause a violation of this article or any other ordinance or regulation of the county, the state, or the United States;

(13) Any other inquiry deemed necessary or desirable by the county to ensure the health, safety, and welfare of the citizens of the county or the preservation of its neighborhoods.

(Ord. of 6-6-1993, § 13)

Sec. 10-44. Persons prohibited as licensees.

(a) No adult entertainment establishment license provided for by this article shall be issued to or held by:

(1) An applicant who has not paid all required fees and taxes, or property taxes for a business at that location;

(2) Any person who is not of good moral character;

(3) Any corporation, any of whose officers, directors or stockholders holding over five percent of the outstanding shares of capital stock on the date of application are not of good moral character;

(4) Any partnership or association, any of whose officers or members holding five percent interest therein on the date of application are not of good moral character;

(5) Any person employing, assisted by, or financed in whole or in part by any person who is not of good moral character;

(6) Any applicant who is not qualified to hold and conduct a business according to the laws of the United States, the state, or the county.

(b) Should there be a sufficient number of current licenses to meet the needs and desires of the inhabitants of the county, no new licenses shall be issued. In determining the needs and desires of the inhabitants, the standard of review shall be that the market is virtually unrestrained as defined in *Young* v. *American Mini Theaters, Inc.* (427 U.S. 50, 81).

(Ord. of 6-6-1993, § 14)

Sec. 10-45. License—Refusal; appeal.

If the county, following investigation of the applicant, deems that the applicant does not fulfill the requirements as set forth in this article, it shall notify the county clerk of such opinion and, within 30 days of the date of application, provide copies of the investigation report to the county clerk. The county clerk shall, within ten days, notify the applicant by certified mail of such denial. Any applicant who is denied a license may appeal such denial to the board of commissioners.

(Ord. of 6-6-1993, § 15)

Sec. 10-46. Same—Renewal.

Licenses for adult entertainment establishments may be renewed on a year-to-year basis, provided that the licensees continue to meet the requirements set out in this article. The renewal fees for the adult entertainment establishment licenses shall be established by resolution of the board of commissioners.
(Ord. of 6-6-1993, § 16)

Sec. 10-47. Change of location or name.

(a) No adult entertainment establishment shall move from the location specified on its license until a change of location fee, established by the board of commissioners, has been deposited with the county and approval has been obtained from the board of commissioners or the planning and zoning commission. Such approval shall not be given unless all requirements and regulations as contained in this Code have been met.

(b) No licensee shall operate, conduct, manage, engage in, or carry on an adult entertainment establishment under any name other than his name and the name of the business as specified on his license.

(c) Any application for an extension or expansion of a building or other place of business where an adult entertainment establishment is located shall require inspection and shall comply with the provisions and regulations of this article.
(Ord. of 6-6-1993, § 17)

Sec. 10-48. Powers of hearing officer.

The hearing officer appointed pursuant to the procedure set forth in this article may receive and rule on admissability of evidence, hear testimony under oath and call witnesses as he may deem advisable with respect to the conduct of the hearing.
(Ord. of 6-6-1993, § 18)

Sec. 10-49. Rules of evidence inapplicable.

The board of commissioners and the hearing officer shall not be bound by the traditional rules of evidence in hearings conducted under this article. Rules of evidence as applied in an administrative hearing shall apply.
(Ord. of 6-6-1993, § 19)

Sec. 10-50. Hearing officer—Report.

(a) The hearing officer shall, within a reasonable time not to exceed 30 days from the date such hearing is terminated, submit a written report to the board of commissioners. Such report shall contain a brief summary of the evidence considered and state findings, conclusions, and recommendations. All such reports shall be filed with the county clerk and shall be considered

public records. A copy of such report shall be forwarded by certified mail to the licensee/appellant the same day it is filed with the county clerk, with additional copies furnished to the chairman of the board of commissioners and the chief of police.

(b) The county clerk shall place the hearing officer's report on the agenda of the next regular board of commissioners' meeting occurring not less than ten days after the report is filed and shall notify the licensee/appellant of the date of such meeting at least ten days prior to the meeting unless the licensee/appellant stipulates to a shorter notice period.
(Ord. of 6-6-1993, § 20)

Sec. 10-51. Same—Action by board of commissioners.

The board of commissioners may adopt or reject the hearing officer's decision in its entirety or may modify the proposed recommendation. If the board of commissioners does not adopt the hearing officer's recommendation, it may:

(1) Refer the matter to the same or another hearing officer for a completely new hearing or for the taking of additional evidence on specific points; in either of such cases, the hearing officer shall proceed as provided in this article;

(2) Decide the case upon a review of the entire record before the hearing officer with or without taking additional evidence.

(Ord. of 6-6-1993, § 21)

Sec. 10-52. Violations; penalty.

Any person violating the provisions of this article shall be guilty of a misdemeanor, punishable as provided in section 1-19. In addition to such fine or imprisonment, violation of this article shall also be grounds for immediate suspension or revocation of the license issued under this article.
(Ord. of 6-6-1993, § 22)

Sec. 10-53. Unlawful operation declared nuisance.

Any adult entertainment establishment operated, conducted or maintained contrary to the provisions of this article shall be and the same is hereby declared to be unlawful and a public nuisance. The county may, in addition to or in lieu of prosecuting a criminal action under this section, commence an action, proceeding for abatement, removal or enjoinment thereof in the manner provided by law. It shall take such other steps and shall apply to such court as may have jurisdiction to grant such relief as will abate or remove such adult entertainment establishment and restrain and enjoin any person from operating, conducting, or maintaining an adult entertainment establishment contrary to the provisions of this article. In addition, a violation of the provisions of this article shall be per se grounds for suspension or revocation of a license granted under this article.
(Ord. of 6-6-1993, § 23)

Sec. 10-54. Cleaning of licensed premises.

Each licensed premises shall be maintained in a clean and sanitary condition and shall be cleaned at least once daily and more frequently when necessary. This activity shall be supervised by the person in charge of the licensed premises. There shall be provided adequate facilities, equipment, and supplies on the licensed premises to meet this requirement, and adequate ventilation and illumination shall be provided to permit thorough, complete cleaning of the entire licensed premises. Trash and garbage shall not be permitted to accumulate or to become a nuisance on or in the immediate vicinity of the licensed premises but shall be disposed of daily or as often as collections permit.
(Ord. of 6-6-1993, § 24)

Sec. 10-55. Self-inspection of licensed premises.

The licensee of a licensed premises or his designated representative shall make sanitary inspections of the licensed premises at least once a month and shall record his findings on a form supplied by the licensing officer. Each licensed premises shall post and maintain in a readily accessible place a schedule for maintaining the sanitation of the premises.
(Ord. of 6-6-1993, § 25)

Sec. 10-56. Sealing for unsanitary or unsafe conditions.

A licensed premises or any part thereof may be sealed by order of the licensing officer on his finding of a violation of this article resulting in an unsanitary or unsafe condition. Prior to sealing, the licensing officer shall serve on the licensee, by personal service on him or by posting in a conspicuous place on the licensed premises, a notice of the violation and an order to correct it within 24 hours after service. If the violation is not so corrected, the licensing officer may physically seal that portion of the licensed premises causing the violation and order the discontinuance of use thereof until the violation has been corrected and the seal removed by the licensing officer. The licensing officer shall affix to the sealed premises a conspicuous sign labeled "Unclean" or "Unsafe" as the case may be.
(Ord. of 6-6-1993, § 26)

Sec. 10-57. Abatement as sanitary nuisance.

A licensed premises or any part thereof may be abated as a sanitary nuisance.
(Ord. of 6-6-1993, § 27)

Sec. 10-58. License fee.

The license fee for an adult entertainment establishment license shall be as set forth in the schedule of fees and charges on file in the office of the county clerk.
(Ord. of 6-6-1993, § 28)

Chapters 11—13

RESERVED

Chapter 14

ANIMALS*

Sec. 14-1. Definitions.
Sec. 14-2. Keeping dogs under control.
Sec. 14-3. Specific requirements for confinement.
Sec. 14-4. Prohibitions for dogs.
Sec. 14-5. Livestock running at large.
Sec. 14-6. Control and removal of animal wastes.
Sec. 14-7. Identification and inoculation.
Sec. 14-8. Obstruction of an officer.
Sec. 14-9. Abuse of animals.
Sec. 14-10. Fees.
Sec. 14-11. Penalty.
Sec. 14-12. Jones County Animal Control Officers.
Sec. 14-13. Power to issue citations.
Sec. 14-14. Field euthanasia.
Sec. 14-15. Injured impounded animals.
Sec. 14-16. Impoundment of animals.
Sec. 14-17. Disposition of impounded animals.
Sec. 14-18. Enforcement.
Sec. 14-19. Confinement of biting animals.
Sec. 14-20. Redemption of impounded animals.
Sec. 14-21. Adoption of animals.
Sec. 14-22. Escape, injury, or theft.
Sec. 14-23. Records.
Sec. 14-24. Regulation of dangerous and potentially dangerous dogs.
Sec. 14-25. Exemption for hunting dogs.

***Editor's note—**Ord. No. 2010-001, adopted June 1, 2010, amended chapter 14 in its entirety to read as herein set out. Former ch. 14 consisted of §§ 14-1—14-14, pertained to the same subject matter and derived from an ordinance adopted Jan. 3, 1989; and a revision adopted July 10, 2001.

Cross references—Environment, ch. 34; health and sanitation, ch. 46.

State law references—Georgia Animal Protection Act, O.C.G.A. § 4-11-1 et seq.; authority to exercise animal control, Ga. Const. art. IX, § II, ¶ III(a)(3).

Sec. 14-1. Definitions.

The following definitions shall apply in the interpretation and enforcement of this chapter:

Animal control officer means an agent of the county assigned to enforce state laws and county ordinances pertaining to animals.

Domestic animal means any dog, cat, or other legally owned animal not defined as wildlife, livestock, or nontraditional livestock.

Livestock means cattle, swine, equines, poultry, sheep, goats, ratites, nontraditional livestock, and ruminants.

Nontraditional livestock means the species of Artiodactlya (even-toed ungulates) listed as bison, water buffalo, farmed deer, llamas, and alpacas that are held and possessed legally and in a manner which is not in conflict with the provisions of O.C.G.A. Title 27, Chapter 5 dealing with wild animals.

Owner means any person who owns, keeps, harbors, possesses, or otherwise keeps any domestic, nontraditional livestock, or livestock animal for a period of seven days, or any person who knowingly permits any domestic, nontraditional livestock, or livestock animal to be kept, harbored, possessed, or otherwise kept upon his premises for a period of seven days, or who has any animal under his care or responsibility, either temporarily or permanently, at any time, within Jones County.

Person means any individual, firm, partnership, corporation, joint venture, association, estate, trust, business trust, receiver, syndicate, or other group or combination acting as a unit.

Potentially dangerous dog means any dog as defined in O.C.G.A. §§ 4-8-21(6) and 4-8-21(b) or any dog that without provocation causes severe injury or death to another domestic animal, except that a dog that inflicts an injury upon another domestic animal when the dog is being used by a law enforcement officer to carry out the law enforcement officer's official duties shall not be a potentially dangerous dog within the meaning of this definition. In addition, a dog shall not be a potentially dangerous dog within the meaning of this definition if the injury inflicted by the dog was sustained by another domestic animal that, at the time, was not under control as defined in this section.

Proper enclosure means an enclosure for keeping a dog while on the owner(s property securely confined indoors or in a securely enclosed and locked pen, fence, or structure suitable to prevent the entry of young children and designed to prevent the dog from escaping. Any such pen or structure shall have secure sides and a secure top, or, if the dog is enclosed within a fence, all sides of the fence shall be of sufficient height and the bottom of the fence shall be constructed or secured in such a manner as to prevent the dog's escape either from over or from under the fence. Such enclosure must be approved by an animal control officer.

Severe injury to another domestic animal means any unprovoked physical injury that results in broken bones or severe lacerations requiring multiple sutures or surgery or a physical injury that results in death.

Wildlife means any vertebrate or invertebrate animal life indigenous to this state or any species introduced or specified by the Department of Natural Resources and includes fish, except domestic fish produced by an aquaculturist registered under O.C.G.A. § 27-4-255, mammals, birds, amphibians, reptiles, crustaceans and mollusks or any part thereof.
(Ord. No. 2010-001, 6-1-2010; Ord. No. 20173-1o, § 1, 3-21-2017)

Cross reference—Definitions generally, § 1-4.

Sec. 14-2. Keeping dogs under control.

(a) It shall be unlawful for any owner of a dog not to control the animal at all times through one of the following means:

(1) On a leash when off the property of the owner;

(2) Within the passenger area of a vehicle driven or parked on the streets;

(3) Within the property limits of its owner and attended by its owner; or

(4) Confined within the property limits of its owner or of another with the permission of the person in control of the property.

(b) "Confined" means in a building, pen or fenced area, or other structure built to prevent intrusion or escape by any dog. Confined also means restrained by use of a suitable tether which is designed to prevent cruelty to the dog and which is otherwise in compliance with this chapter.
(Ord. No. 2010-001, 6-1-2010)

Sec. 14-3. Specific requirements for confinement.

It shall be an offense for any owner of a domestic animal not to satisfy the following requirements:

(a) Any tether used to confine an animal while attended by its owner shall be a minimum of ten feet in length, shall be attached to a collar or harness, and shall not be wrapped directly around the animal's neck. Such tethers shall not be excessively heavy or weighted so as to inhibit the animal's movement.

(b) All domestic animals shall be provided with sanitary shelter from the elements. Said shelter shall be designed, constructed and maintained to protect the animal from rain, snow, ice, excessive cold, excessive heat and excessive direct sunlight, and of a size to allow the animal sufficient space to stand, turn around, and lie down, and make all other normal body movements in a normal and comfortable position appropriate to the age, size, and health of the animal. Examples of inadequate shelter include, but are not limited to, lean-tos, metal drums, boxes, vehicles, or the area on or beneath exposed porches or decks. Nothing in this subsection shall be

construed to prevent the transportation and temporary confinement of a domestic animal within the passenger area of a vehicle provided that the animal is provided adequate ventilation and temperature control in order to protect the animal from excessive heat or cold.

(c) All domestic animals shall be provided with clean, potable water at all times.

(d) An owner must promptly remove and dispose of animal excrement and food wastes and debris so as to minimize vermin infestation, contamination, odors, and disease hazards.

(e) All domestic animals shall be provided with a safe and sanitary confinement area constructed to confine the animal, to protect the animal from injury, and of a sufficient space to allow for adequate exercise suitable to the age, size, species, and breed of animal. The area shall have a means to rapidly eliminate excess water and minimize mud.

(Ord. No. 2010-001, 6-1-2010; Ord. No. 20173-1o, § 1, 3-21-2017)

Sec. 14-4. Prohibitions for dogs.

(a) It shall be unlawful for any person to permit a dog under his or her ownership or possession to do the following:

(1) Go upon the property of any person other than its owner or keeper without the express consent of such other owner or occupant;

(2) Attack or act so as to menace pedestrians or other persons using public ways or on the property of another;

(3) Disturb the peace of any other person by loud, persistent, habitual barking, howling, growling, yelping or whining; or

(4) Be in heat and not be confined in an enclosure to the property of its owner or keeper.

(b) Pending an adjudication for any citation for a violation of paragraph (a)(2) of this section, the person cited shall be required to maintain the dog in a proper enclosure, as defined in this chapter. Any person convicted of violating this subsection, in addition to penalties provided for in section 14-11, shall be required to maintain the dog in a proper enclosure, as defined in this chapter.

(c) For purposes of paragraph (a)(3) of this section, the "loud, persistent, habitual barking, howling, growling, yelping, or whining" must be plainly audible to a person of normal hearing ability not located on the same property as the dog making such vocalizations for more than 15 minutes without interruption or more than 30 minutes if such vocalization is intermittent.

(d) No person shall be charged with violating paragraph (a)(3) of this section unless written warning has previously been issued within 90 days of the charged violation.

(e) No citation for violating paragraph (a)(3) shall be issued unless there are at least two complaining witnesses who shall have signed a written statement stating the address of the dog owner, a description of the dog and of the offense and the date, time and location of the offense.
(Ord. No. 2010-001, 6-1-2010)

Sec. 14-5. Livestock running at large.

It shall be unlawful for the owner or keeper of any hog, cattle, mule, sheep, goat, fowl or any other livestock or nontraditional livestock animal to permit it to run at large in Jones County or to stray from the property of the owner or keeper or to go upon the premises of any other person.
(Ord. No. 2010-001, 6-1-2010)

Sec. 14-6. Control and removal of animal wastes.

(a) It shall be unlawful for the owner of any animal to refuse or fail to immediately remove any feces deposited by such animal upon public sidewalks, public streets, public parks or other public property in Jones County, or upon any private property within Jones County not under the exclusive use and control of said owner or keeper.

(b) It shall be unlawful for the owner of any animal to permit such animal to defecate or urinate upon any private property except that upon which he or she resides or owns unless he or she has the permission of the owner of such other private property.
(Ord. No. 2010-001, 6-1-2010)

Sec. 14-7. Identification and inoculation.

It shall be unlawful for any person to own, possess or maintain any dog or cat that does not have a current rabies inoculation and any such dog or cat should wear at all times a securely attached collar about its neck displaying such current rabies tag.
(Ord. No. 2010-001, 6-1-2010)

Sec. 14-8. Obstruction of an officer.

(a) It shall be unlawful for any person to hinder, interfere, harass or otherwise obstruct the performance of any Jones County animal control officer in the official performance of his or her duties as provided for in this chapter.

(b) It shall be unlawful for any person to relocate, interfere with, or alter the operation of any device, equipment, or item of Jones County animal control.

(c) It shall be unlawful for any person to place their own animal into or remove any animal confined within a trap or cage operated by Jones County animal control.

(d) It shall be unlawful for any person to give a false name, address or date of birth to any Jones County animal control officer in the lawful discharge of his or her official duties with the intent to mislead such officer, employee or agent in any way.
(Ord. No. 2010-001, 6-1-2010)

Sec. 14-9. Abuse of animals.

Jones County animal control officers shall be authorized to enforce the provisions of O.C.G.A. § 4-11-1, entitled "the Georgia Animal Protection Act (O.C.G.A. § 4-11-2 et seq.).
(Ord. No. 2010-001, 6-1-2010)

Sec. 14-10. Fees.

Any person reclaiming or adopting an animal or registering a dangerous or potentially dangerous dog shall pay all appropriate fees according to the fee schedule maintained by Jones County Animal Control.
(Ord. No. 2010-001, 6-1-2010)

Sec. 14-11. Penalty.

Any person violating this chapter shall be punished pursuant to the provisions of section 1-19 of this Code, which may include a fine of up to $1,000.00; imprisonment in the county prison or in the county jail; work and labor on the streets or public works of the county, whether within or without the corporate limits, not exceeding 180 days; and/or both a fine and sentence of imprisonment and labor. All sentences may be in the alternative and fines may be imposed with the alternative of sentence to imprisonment and labor if the fines are not paid. Each day any violation of this chapter shall continue, shall constitute a separate offense.
(Ord. No. 2010-001, 6-1-2010)

Sec. 14-12. Jones County Animal Control Officers.

It shall be known that the animal control officers for Jones County are authorized agents of Jones County, entrusted with the duties of enforcing all state laws and county ordinances pertaining to the management, welfare, and control of all animals within Jones County, and shall have the authority to procure and serve citations as may be deemed appropriate to properly perform the duties of a Jones County animal control officer.
(Ord. No. 2010-001, 6-1-2010)

Cross reference—Officers and employees, § 2-141 et seq.

Sec. 14-13. Power to issue citations.

Citations for violations of this chapter may be issued by Jones County animal control officers or by officers or deputies of the Jones County Sheriff's Office.
(Ord. No. 2010-001, 6-1-2010)

Sec. 14-14. Field euthanasia.

Jones County animal control officers have the right and authority to perform field euthanasia when it is determined by such officer that an injured or sick animal is in pain and is beyond hope of recovery.
(Ord. No. 2010-001, 6-1-2010)

Sec. 14-15. Injured impounded animals.

Agents and officers of Jones County animal control shall have the authority to humanely dispose of impounded animals which are diseased or injured whenever it shall appear that any such animal is suffering great pain and whenever one of the following applies:

(1) No determination as to the owner can be made after a reasonable inquiry or investigation; or

(2) The owner cannot be contacted within a reasonable amount of time; or

(3) The owner refuses to claim the animal immediately and accept financial responsibility for necessary veterinary treatment.

(Ord. No. 2010-001, 6-1-2010)

Sec. 14-16. Impoundment of animals.

Except as otherwise provided for by state law, any domestic, nontraditional livestock or livestock animal that is in violation of this chapter, whether the animal is on public or private property, may be, but are not required to be, impounded by Jones County animal control.
(Ord. No. 2010-001, 6-1-2010)

Sec. 14-17. Disposition of impounded animals.

(a) If an animal remains unclaimed within three business days, then agents or officers of Jones County animal control shall be authorized either to dispose of such animal in as humane a manner as possible or to donate such animal to a nonprofit institution or agency for the purpose of humane placement or rescue.

(b) Notwithstanding the foregoing, animals in need of medical attention, nursing mothers and unweaned animals may be immediately released to nonprofit or rescue organizations. In the event that an owner attempts to claim an animal within the stray hold period that has been released to a nonprofit or rescue organization under this provision, the nonprofit or rescue organization must return said animal to the owner. The owner shall not be billed for any medical expenses incurred by the nonprofit or rescue organization. Medical expenses incurred in association with treatment provided under this provision are the sole responsibility of the nonprofit or rescue organization.

(c) No live animal in the possession of Jones County animal control shall be released, sold or given to any individual, institution, or private firm for the purposes of medical and scientific research.

(d) When calculating the prescribed amount of time for the execution of rights or responsibilities in this chapter, each day that the animal control facility is open shall be counted, except for the first day that an animal is impounded shall not be counted.
(Ord. No. 2010-001, 6-1-2010; Ord. No. 20173-1o, § 1, 3-21-2017)

Sec. 14-18. Enforcement.

This chapter shall be enforced by Jones County animal control and by the Jones County Sheriff's Office. Upon information known to, or a signed written statement lodged with, a Jones County animal control officer or an officer or deputy of the Jones County Sheriff's Officer that any owner of an animal is in violation of this chapter, a citation may be served upon the owner of the animal to appear before the Jones County Magistrate Court on a day and time certain to stand trial for violation of this chapter. If such violation has not been witnessed by an officer or deputy, a subpoena may be issued to the person supplying the information on which a formal charge may be made to appear at said time and date to testify on behalf of Jones County. Jones County animal control officers and officers or deputies of the Jones County Sheriff's Office are authorized to use necessary means to obtain subpoenas from the magistrate court for the purpose of enforcing this chapter.
(Ord. No. 2010-001, 6-1-2010)

Sec. 14-19. Confinement of biting animals.

(a) Any animal that is known to have bitten or scratched a person shall be confined for the purposes of rabies observation to the animal control facility, to a veterinary facility or to such other facility as may be directed by the county health department for a period of ten days after the date of the bite or scratch. All expenses incurred for such confinement and observation shall be paid by the owner of such animal.

(b) The animal control superintendent shall be authorized to order the owner of any dog that is known to have bitten a person or to have caused severe injury or death to another dog or cat to submit the dog for rabies observation to the animal control facility, to a veterinary facility or to such other facility as may be approved by the county health department. All expenses incurred for such confinement and observation shall be paid by the owner of such animal.
(Ord. No. 2010-001, 6-1-2010)

Sec. 14-20. Redemption of impounded animals.

It shall be the responsibility of Jones County animal control to attempt to notify the owner, if known, or can be reasonably ascertained, of every animal impounded, by telephone if possible, or by mail or by written notice at the residence of the owner within two working days of the impoundment. The owner of the animal may claim and take custody of the animal within three days of such impoundment by the payment of required fees and the cost of inoculations and veterinary services.
(Ord. No. 2010-001, 6-1-2010; Ord. No. 20173-1o, § 1, 3-21-2017)

Sec. 14-21. Adoption of animals.

(a) Jones County animal control may offer for adoption any animal unclaimed after five business days following impoundment.

(b) Potential persons who want to adopt an animal must make application for adoption with Jones County animal control and meet requirements associated with the humane housing and care of the animal as determined by Jones County animal control and by the payment of the required fees.

(c) No unclaimed dog which is not neutered or spayed shall be released from the Jones County animal control facility without a written agreement from the person adopting the animal that such animal will be sterilized within 30 days from the date of adoption. Failure of the owner to spay or neuter the adopted dog within the prescribed time will constitute a violation of O.C.G.A. § 4-14-3(c) and will be prosecuted as a misdemeanor as prescribed in O.C.G.A. § 4-14-4.

(d) Adopted animals under six months old must be sterilized by the time the animal is seven months old.
(Ord. No. 2010-001, 6-1-2010)

Sec. 14-22. Escape, injury, or theft.

Employees of Jones County animal control shall exercise reasonable care to prevent the injury, escape or theft of any animal which is in their custody or which they are attempting to bring into their custody under the provisions of this chapter, but they shall not be responsible for any such occurrence.
(Ord. No. 2010-001, 6-1-2010)

Sec. 14-23. Records.

It shall be the duty of the employees, agents, and officers of Jones County animal control to keep accurate written records showing the final disposition of all animals impounded thereby, the date of impoundment, the description and other identifying data of the animal, the fees collected, the disposition of the animal and the date thereof, which record shall be open and available for public inspection at a reasonable place during the regular business hours for a period of 24 months after the date of impoundment.
(Ord. No. 2010-001, 6-1-2010)

Sec. 14-24. Regulation of dangerous and potentially dangerous dogs.

(a) Jones County animal control officers shall be designated to carry out the duties of dog control officer as provided for in O.C.G.A. § 4-8-22(c) and as provided for in this chapter.

(b) Whenever a dog within Jones County has been classified as potentially dangerous pursuant to the provisions of this chapter or as potentially dangerous or dangerous under O.C.G.A. § 4-8-20 et seq., or during the specified amount of time that such classification is eligible for or under appeal by the owner, the following apply:

(1) Before the dog will be released to the owner pending classification, the owner must meet all of the requirements of O.C.G.A. § 4-8-25 and of this section for the classification. Jones County animal control officers shall be authorized to inspect and approve the method of confinement for the dog being classified.

(2) The owner of the dog shall confine the dog only in a proper enclosure in the approved location and by the approved method. The owner shall post on the premises where the dog is kept a clearly visible sign warning that there is a dangerous or potentially dangerous dog on the property. The sign shall conform substantially to the uniform design and symbol created by the Georgia Department of Natural Resources under O.C.G.A. § 4-8-25(b).

(3) The owner of the dog shall immediately notify the animal control division if the dog is not confined in the approved location or by the approved method, the dog is stolen or missing, the dog is donated, transferred or sold, or the dog is deceased. The owner must submit within two business days a notarized, sworn written statement describing the circumstances of the dog's death or disappearance, or the name, address and telephone number of the person to whom the dog was donated, transferred or sold. In the event that the dog is deceased, the owner shall not dispose of the body until authorized to do so by Jones County animal control.

(4) Jones County animal control officers shall be authorized to administer an identifying microchip and/or other types of permanent identification to the dog. It shall be unlawful for any person to tamper with or remove such identification.

(5) Whenever a dog classified as potentially dangerous or dangerous under O.C.G.A. § 4-8-20 et seq. or under this chapter is subject to confiscation under O.C.G.A. § 4-8-27 or under this chapter, the owner of the dog must submit the dog to a Jones County animal control officer without delay. A potentially dangerous dog is subject to confiscation under this chapter if it is not validly registered as a potentially dangerous dog, not maintained in a proper enclosure or is outside the proper enclosure in violation of this chapter.

(6) The owner must meet the requirements for keeping a potentially dangerous or dangerous dog no later than five days after the date the classification becomes effective. If the dog is not retrieved from Jones County within such time, then the dog shall be deemed unclaimed and subject to the provisions of section 14-17.

(c) Notwithstanding any other provisions of this chapter to the contrary, any dog that causes a fatality to a human or another dog will not be released to the owner until the end of any appeals process.
(Ord. No. 2010-001, 6-1-2010)

Sec. 14-25. Exemption for hunting dogs.

Any hunting dog, while under the direct control of the hunter, shall be exempt from section 14-2, provided that a valid rabies vaccination can be proven.
(Ord. No. 2010-001, 6-1-2010)

Chapters 15—17

RESERVED

Chapter 18

BUILDINGS, CONSTRUCTION AND RELATED ACTIVITIES*

Article I. In General

Sec. 18-1. Self inspection by plumbers, utility contractors.
Secs. 18-2—18-30. Reserved.

Article II. Construction Codes

Sec. 18-31. Adopted.
Sec. 18-32. Enforcement.
Sec. 18-33. Building department.
Sec. 18-34. Applicability.
Sec. 18-35. Records.
Sec. 18-36. Liability.
Sec. 18-37. Right of entry.
Sec. 18-38. Stop work orders.
Sec. 18-39. Violations and penalties.
Secs. 18-40—18-70. Reserved.

Article III. Permits and Inspections

Sec. 18-71. Scope.
Sec. 18-72. Permit application.
Sec. 18-73. Misrepresentation of application.
Sec. 18-74. Prescribed fees.
Sec. 18-75. Accounting.
Sec. 18-76. Building permit valuations.
Sec. 18-77. Required inspections.
Sec. 18-78. Revocation.
Secs. 18-79—18-110. Reserved.

Article IV. Flow-Rate Restrictions on Plumbing Fixtures

Sec. 18-111. Purpose of article.
Sec. 18-112. Definitions.
Sec. 18-113. Standards for fixtures.
Sec. 18-114. Product certification.
Sec. 18-115. Exceptions.
Sec. 18-116. Enforcement; penalty for violation of article.
Secs. 18-117—18-150. Reserved.

***Cross references—**Environment, ch. 34; construction or repairing of buildings, § 34-42; fire prevention and protection, ch. 38; floods, ch. 42; new construction and substantial improvements, § 42-99; nonresidential construction, § 42-100; health and sanitation, ch. 46; historic preservation, ch. 50; demolition or relocation applications, § 50-161 et seq.; roads, ch. 58; solid waste, ch. 62; water and sewers, ch. 74; comprehensive land development, app. A; minimum distance between buildings, app. A, § 68.

Article V. Reserved

Secs. 18-151—18-225. Reserved.

Article VI. Unsafe Buildings

Sec. 18-226. Title and scope.
Sec. 18-227. Power and duties of the enforcement officer.
Sec. 18-228. Determination of violation.
Sec. 18-229. Right of appeal.
Sec. 18-230. Implementation.
Secs. 18-231—18-250. Reserved.

Article VII. Stormwater Management

Division 1. Generally

Sec. 18-251. Purpose and intent.
Sec. 18-252. Applicability.
Sec. 18-253. Designation of article administrator.
Sec. 18-254. Compatibility with other regulations.
Sec. 18-255. Severability.
Sec. 18-256. Stormwater design manual.
Sec. 18-257. Definitions.
Secs. 18-258—18-270. Reserved.

Division 2. Permit Procedures and Requirements

Sec. 18-271. Permit application requirements.
Sec. 18-272. Stormwater concept plan and consultation meeting.
Sec. 18-273. Stormwater management plan requirements.
Sec. 18-274. Stormwater management inspection and maintenance agreements.
Sec. 18-275. Performance and maintenance bonds.
Sec. 18-276. Application procedure.
Sec. 18-277. Application review fees.
Sec. 18-278. Modifications for off-site facilities.
Secs. 18-279—18-290. Reserved.

Division 3. Post-Development Stormwater Management Performance Criteria

Sec. 18-291. Applicability.
Sec. 18-292. Water quality.
Sec. 18-293. Stream channel protection.
Sec. 18-294. Overbank flooding protection.
Sec. 18-295. Extreme flooding protection.
Sec. 18-296. Structural stormwater controls
Sec. 18-297. Stormwater credits for nonstructural measures.
Sec. 18-298. Drainage system guidelines.
Sec. 18-299. Dam design guidelines.
Secs. 18-300—18-310. Reserved.

Division 4. Construction Inspections of Post-Development Stormwater Management System

Sec. 18-311. Inspections to ensure plan compliance during construction.
Sec. 18-312. Final inspection and as built plans.
Secs. 18-313—18-320. Reserved.

Division 5. Ongoing Inspection and Maintenance of Stormwater Facilities and Practices

Sec. 18-321. Long-term maintenance inspection of stormwater facilities and practices.
Sec. 18-322. Right-of-entry for inspection.
Sec. 18-323. Records of maintenance activities.
Sec. 18-324. Failure to maintain.
Secs. 18-325—18-340. Reserved.

Division 6. Violations, Enforcement and Penalties

Sec. 18-341. Violation; relief.
Sec. 18-342. Notice of violation.
Sec. 18-343. Penalties.
Secs. 18-344—18-375. Reserved.

Article V. Minimum Health and Safety Standards for Pre-Owned Manufactured Homes

Sec. 18-376. Definitions.
Sec. 18-377. Conditions.
Sec. 18-378. Permitting, inspection, certificate of occupancy and fees.
Sec. 18-379. Minimum health and safety standards.
Sec. 18-380. Enforcement.
Sec. 18-381. Penalties.

ARTICLE I. IN GENERAL

Sec. 18-1. Self inspection by plumbers, utility contractors.

The county is exempted from the provisions of O.C.G.A. § 8-2-26(d) relating to the self inspection of certain water and sewer lines, and such provisions shall not be applicable in the county.
(Res. of 5-7-1996)

Secs. 18-2—18-30. Reserved.

ARTICLE II. CONSTRUCTION CODES*

Sec. 18-31. Adopted.

Enumeration: The following codes, the latest edition as adopted and amended by the state department of community affairs, shall be enforced by the county.

(1) Standard Building Code;

(2) Standard Mechanical Code;

(3) Standard Gas Code;

(4) Standard Plumbing Code;

(5) National Electrical Code;

(6) Standard Fire Prevention Code;

(7) CABO One and Two Family Dwelling Code; and

(8) Georgia State Energy Code for Buildings.

(Ord. of 3-3-1992, § 1; Ord. of 4-4-1995)

State law references—Authority to adopt technical codes, Ga. Const. art. IX, § II, ¶ III(a)(12); construction standards generally, O.C.G.A. § 8-2-1 et seq.; minimum state construction codes, O.C.G.A. § 8-2-25.

Sec. 18-32. Enforcement.

When reference is made to the duties of certain officials named in the various construction codes adopted by this article, the designated county official shall be deemed to be the responsible official for the enforcement of such codes.
(Ord. of 3-3-1992, § 3)

***Cross reference—**Conformity of building codes, § 50-5.

State law references—Minimum state construction codes, O.C.G.A. § 8-2-25; enforcement of minimum state construction codes, O.C.G.A. § 8-2-26; authority to adopt codes, Ga. Const. art. IX, § II, ¶ III(a)(12).

Sec. 18-33. Building department.

There is hereby established a department to be called the building department and the person in charge shall be known as the building official.
(Ord. of 3-3-1992, § 101.4)

Sec. 18-34. Applicability.

Where, in any specific case, different sections of this article specify different materials, methods of construction or other requirements, the most restrictive shall govern. Where there is a conflict between a general requirement and a specific requirement, the specific requirement shall be applicable.
(Ord. of 3-3-1992, § 101.3)

Sec. 18-35. Records.

The building official shall keep, or cause to be kept, a record of the business of the department. The records of the department shall be open to public inspection.
(Ord. of 3-3-1992, § 101.41)

Sec. 18-36. Liability.

Any officer or employee charged with the enforcement of this article, acting for the applicable governing authority in the discharge of his duties, shall not thereby render himself personally liable, and is hereby relieved from all personal liability, for any damage that may accrue to persons or property as a result of any act required or permitted in the discharge of his duties. Any suit brought against any officer or employee or member because of such act performed by him in the enforcement of any provision of this article shall be defended by the department of law until the final termination of the proceedings.
(Ord. of 3-3-1992, § 101.42)

Sec. 18-37. Right of entry.

Whenever necessary to make an inspection to enforce any of the provisions of this article, or whenever the building official has reasonable cause to believe that there exists in any building or upon any premises any condition or code violation which makes such building, structure, premises, electrical, gas, mechanical or plumbing systems unsafe, dangerous or hazardous, the building official may enter such building, structure or premises at all reasonable times to inspect the such building, structure or premises or to perform any duty imposed upon the building official by this article, provided that if such building or premises is occupied, he shall first present proper credentials and request entry. If such building, structure, or premises is unoccupied, he shall first make a reasonable effort to locate the owner or other persons having charge or control of such and request entry. If entry is refused, the building official shall have recourse to every remedy provided by law to secure entry. When the building official shall have first obtained a proper inspection warrant or other remedy provided by law to secure entry, no owner or occupant or any other persons having charge, care or

control of any building, structure, or premises shall fail or neglect, after proper request is made as provided in this section, to promptly permit entry by the building official for the purpose of inspection and examination pursuant to this article.
(Ord. of 3-3-1992, § 101.5)

Sec. 18-38. Stop work orders.

Upon notice from the building official, work on any building, structure, electrical, gas, mechanical or plumbing system that is being done contrary to the provisions of this article or in a dangerous or unsafe manner, shall immediately cease. Such notice shall be in writing and shall be given to the owner of the property, or to his agent, or to the person doing the work, and shall state the conditions under which work may be resumed. Where an emergency exists, the building official shall not be required to give a written notice prior to stopping the work.
(Ord. of 3-3-1992, § 101.6)

Sec. 18-39. Violations and penalties.

Any person who shall violate a provision of this article, or fail to comply therewith, or with any of the requirements thereof, or who shall erect, construct, alter, install, demolish or move any structure, electrical, gas, mechanical or plumbing system, or has erected, constructed, altered, repaired, moved or demolished a building, structure, electrical, gas, mechanical or plumbing system, in violation of a detailed statement or drawing submitted and permitted under this article shall be guilty of a misdemeanor. Each such person shall be considered guilty of a separate offense for each and every day or portion thereof during which any violation of any of the provisions of this article is committed or continued, and upon conviction of any such violation such person shall be punished within the limits and as provided by state laws.
(Ord. of 3-3-1992, § 102)

Secs. 18-40—18-70. Reserved.

ARTICLE III. PERMITS AND INSPECTIONS

Sec. 18-71. Scope.

The inspection or permitting of any building, system or plan by any jurisdiction, under the requirements of this article, shall not be construed in any court as a warranty of the physical condition of such building, system or plan or their adequacy. No jurisdiction nor any employee thereof shall be liable in court for damages for any defect or hazardous or illegal condition or inadequacy in such building, system or plan, nor for any failure of any component of such, which may occur subsequent to such inspection or permitting.
(Ord. of 3-3-1992, § 101.2)

Sec. 18-72. Permit application.

Any owner, authorized agent, or contractor who desires to construct, enlarge, alter, repair, move, demolish, or change the occupancy of a building or structure, or to erect, install, enlarge, alter, repair, remove, convert or replace any electrical, gas, mechanical or plumbing system, the installation of which is regulated by the technical codes, or to cause any such work to be done, shall first make application to the building official and obtain the required permit for the work.
(Ord. of 3-3-1992, 101.9)

Sec. 18-73. Misrepresentation of application.

The building official may revoke a permit or approval, issued under the provisions of this article, in case there has been any false statement or misrepresentation as to the material fact in the application or plans on which the permit or approval was based.
(Ord. of 3-3-1992, § 101.7)

Sec. 18-74. Prescribed fees.

A permit shall not be issued until the fees set forth in the schedule of fees and charges on file in the office of the county clerk have been paid. Nor shall an amendment to a permit be released until the additional fee, if any, due to an increase in the estimated cost of the building, structure, electrical, plumbing, mechanical or gas systems, has been paid.
(Ord. of 3-3-1992, § 103.1)

Sec. 18-75. Accounting.

The building official shall keep a permanent and accurate accounting of all permit fees and other monies collected, the names of all persons upon whose account the permit fees and monies were paid, along with the date and amount thereof.
(Ord. of 3-3-1992, § 103.2)

Sec. 18-76. Building permit valuations.

If, in the opinion of the building official, the valuation of the building, alteration, structure, electrical, gas, mechanical or plumbing systems appears to be underestimated on the application, permit shall be denied, unless the applicant can show detailed estimates to meet the approval of the building official. Permit valuations shall include total cost, such as electrical, gas, mechanical, plumbing equipment and other systems, including materials and labor.
(Ord. of 3-3-1992, § 103.3)

Sec. 18-77. Required inspections.

(a) The inspector will make inspections that he deems necessary. Typically these include but are not limited to:

(1) *Footing inspection:* After ground work is completed and prior to placement of any concrete.

(2) *Framing inspection:* After completion of rough-in stages of electrical, plumbing, mechanical, and framing and before any work is concealed.

(3) *Final inspection:* To be made after the building is complete and ready for occupancy.

(b) It shall be the responsibility of the permit holder to notify the inspector when the structure is ready for the required inspections.
(Ord. of 3-3-1992, § 103.4)

Sec. 18-78. Revocation.

The building official may revoke a permit upon determination by the building official that the construction, erection, alteration, repair, moving, demolition, installation or replacement of the building, structure, electrical, gas, mechanical or plumbing systems for which the permit was issued is in violation of, or not in conformity with, the provisions of this article.
(Ord. of 3-3-1992, § 101.8)

Secs. 18-79—18-110. Reserved.

ARTICLE IV. FLOW-RATE RESTRICTIONS ON PLUMBING FIXTURES*

Sec. 18-111. Purpose of article.

It is the purpose of this article to:

(1) Require the use of ultra-low-flow plumbing fixtures in all new construction or when replacing plumbing fixtures during renovation or remodeling of existing buildings;

(2) Require the certification of plumbing fixtures regarding flow rates and serviceability standards;

(3) Promote compliance with state laws for the purpose of conserving water;

(4) Maintain the integrity of drinking water supplies; and

(5) Reduce wastewater flows.

Sec. 18-112. Definitions.

The following words, terms and phrases, when used in this article, shall have the meanings ascribed to them in this section, except where the context clearly indicates a different meaning:

Commercial building means any type of building other than residential.

Construction means the erection of a new building or the alteration of an existing building in connection with its repair or renovation or in connection with making an addition to an existing building, and shall include the replacement of a malfunctioning, unserviceable or obsolete faucet, showerhead, toilet, or urinal in an existing building.

***State law references—**Water efficiency requirements, O.C.G.A. § 8-2-1 et seq.; flow-rate restrictions on plumbing fixtures, O.C.G.A. § 8-2-3.

Plumbing fixture means any toilet, urinal, showerhead, bathroom, lavatory and kitchen faucet and replacement aerators.

Residential building means any building or unit of a building intended for occupancy as a dwelling but shall not include a hotel or motel.

Toilet means any fixture consisting of a water-flushed bowl with a seat, used for the disposal of human waste.

Urinal means any fixture consisting of a water-flushed bowl used for the disposal of human waste.
(Ord. of 1-8-1991, § 1)

Cross reference—Definitions generally, § 1-4.

Sec. 18-113. Standards for fixtures.

No plumbing fixture shall be installed which does not meet the standards listed in this section or the state plumbing code, whichever is stricter. This includes all plumbing fixtures installed in newly constructed buildings or when replacing plumbing fixtures during remodeling or renovation of existing buildings, except as noted in section 18-115. The effective date of this requirement for residential buildings shall be April 1, 1992, and for commercial buildings the effective date shall be July 1, 1992.

(1) All plumbing fixtures installed as referred to in this section shall not exceed the following maximum water use rates:

a. Toilets	1.6 gallons per flush
b. Urinals	1.0 gallon per flush
c. Showerheads	2.5 gallons per minute, at 60 psi gauge pressure
d. Kitchen faucets	2.5 gallons per minute
e. Bathroom and lavatory faucets	2.0 gallons per minute

(2) The flow restriction device in a showerhead must be a permanent and integral part of the showerhead and must not be removable to allow flow rates in excess of that stated in subsection (1) of this section.

(3) Lavatory faucets located in restrooms intended for use by the general public shall be of the metering or self-closing type, in addition to the flow requirement listed in subsection (1) of this section.

(4) The flow rates for all showerheads, and kitchen, bathroom and lavatory faucets shall be determined in accordance with ANSI/ASME A112.18.lM-1989 Plumbing Fixture Fittings, as amended; except that maximum flow rates may not exceed those given in subsection (1) of this section.

(5) All toilets and urinals shall be certified to meet the hydraulic performance standards for low consumption water closets specified in ANSI/ASME A112.19.2-1990 Vitreous China Plumbing Fixtures, as amended, and ANSI/ASME A112.19.6-1990 Hydraulic Requirements for Water Closets and Urinals, as amended.

(Ord. of 1-8-1991, §§ 2, 3)

Sec. 18-114. Product certification.

The manufacturer shall certify compliance with the standards in section 18-113 by labeling the fixture and packaging as described in this section and providing, upon request, appropriate certification by an independent national testing organization acceptable to the county building official. Effective April 1, 1992, all toilets, urinals, showerheads or faucets shall be clearly labeled to indicate the maximum flow rate or water usage of the fixture at the specified test pressure. Toilets and urinals shall additionally be labeled ASME A112.19.2M, as prescribed in section 8 of such standard. The label shall be affixed to the fixture and remain there until the proper building and/or plumbing inspections have been conducted. Also, the packaging must be clearly marked to identify water use rates when offered for retail.

(Ord. of 1-8-1991, § 4)

Sec. 18-115. Exceptions.

Permission for the exceptions listed in this section must be obtained from the building official. New construction and the repair or renovation of an existing building may be exempt from the standards of section 18-113 for the following:

(1) Showers and faucets installed for safety purposes, such as emergency eye wash stations, etc.

(2) Plumbing fixtures specifically designed for the physically handicapped.

(3) Fixtures specifically designed to withstand unusual abuse or for installation in a correctional institution which may require more water for proper operation.

(4) Instances of building renovation where significant plumbing modifications would be required to accommodate the lower flows or for specialized purposes that cannot be accommodated by existing technology.

(Ord. of 1-8-1991, § 5)

Sec. 18-116. Enforcement; penalty for violation of article.

Citations for violations of this article may be issued by the building official or his authorized representative. Any person violating this article shall be tried before the municipal court. Upon conviction, such person found guilty of a violation of this article shall be punished as provided in section 1-19.

(Ord. of 1-8-1991, § 6)

Secs. 18-117—18-150. Reserved.

ARTICLE V. RESERVED*

Secs. 18-151—18-225. Reserved.

ARTICLE VI. UNSAFE BUILDINGS

Sec. 18-226. Title and scope.

(a) *Title.* Provisions in the following chapters and sections shall constitute and be known and be cited as the Standard Unsafe Building Abatement Code, hereinafter referred to as "this code."

(b) *Code remedial.* This code is hereby declared to be remedial, and shall be construed to secure the beneficial interests and purposes thereof which are public safety, health and general welfare through structural strength, stability, sanitation, adequate light and ventilation, and safety to life and property from fire and other hazards to the construction, alteration, repair, removal, demolition, use or occupancy of buildings, structures or premises.

(c) *Scope.* The provisions of this code shall apply to all unsafe buildings or structures, as herein defined, and shall apply equally to new and existing conditions.

(d) *Special historic buildings and districts.* The provisions of this code relating to the construction, alteration, repair, enlargement, restoration, or relocation of buildings or structures shall not be mandatory for existing buildings or structures listed on the National Register of Historic Places; or identified and classified by the State of Georgia or local jurisdiction as an historic building to be safe and in the public interest of health, safety and welfare regarding any proposed construction, alteration, repair, enlargement, restoration, or relocation of such buildings.
(Ord. No. 200509-1o, § 101, 9-6-2005; Ord. No. 200604-1o, § 101, 4-18-2006; Ord. No. 2009-06, 4-7-2009)

Sec. 18-227. Power and duties of the enforcement officer.

(a) *Enforcement officer.* The building official, a member of his staff to whom he may delegate such duty or some other person chosen by the board of commissioners of the county shall serve as building inspector. The county code enforcement officer shall be charged with the enforcement of this article.

(b) *Inspection of property that appears unsafe.* Whenever the building inspector is advised that any building or structure is unsafe, he shall proceed to investigate and determine whether, on the basis of the facts disclosed, he finds that the building is in fact unsafe. The building inspector may enter such building at all reasonable times to inspect the same or to

---

***Editor's note—**At a council meeting held on April 2, 2013, art. V, consisting of §§ 18-151—18-161, and 18-181—18-191, pertaining to telecommunications antenna and tower standards was requested to be removed from the Code. The motion passed by unanimous vote of the board.

perform any duty imposed upon the building inspector by this Code, provided that if such building or premises is occupied, the building inspector shall first present proper credentials and request entry. If such building, structure or premises is unoccupied and not accessible, the

[The next page is CD18:23]

building inspector shall first make a reasonable effort to locate the owner or other persons having charge or control of such and request entry. If entry is refused, the building inspector shall have recourse to every remedy provided by law to secure entry.

Any person who contacts the building inspector to report the existence of an unsafe building may give his or her name and address, and the location of the building referred to.

(c) *Definition of an unsafe building.* Unsafe buildings are any buildings or structures that are vacant (except such structures as may have been originally constructed for human habitation and are currently being used for agricultural purposes* such as for the storage of agricultural products and supplies) and:

(1) Whose interior or exterior bearing walls, or other vertical structural members list, lean, or buckle, to such extent as to weaken the structural support of such member or members below the minimum required to be accepted as safe by generally accepted standards, or

(2) Which have parts which are so attached that they are likely to fall and injure persons or property, or

(3) Which in whole or in part are so dilapidated, decayed, damaged from any cause, or deteriorated in any manner that they are likely to cause injury to persons or property, or

(4) Which are likely to cause injury to persons or property because they contain weakened, defective or deteriorated:

a. Footings or foundations.

b. Floorings or floor supports.

c. Ceilings or ceiling support.

d. Roof or chimney, or

(5) Those which have visible soil erosion adjacent to or under any structural support, or

(6) Those which because of lack of proper maintenance, deterioration or decay, are fire hazards or are otherwise dangerous to human life, safety or health.

(d) *Declared nuisance.* Any building determined to be an unsafe building under this article is hereby declared to be a public nuisance.

(e) *Notice to repair, demolish.*

(1) After the building inspector has performed an inspection, a written report shall be provided to the enforcement officer. If the building inspector finds that the building is unsafe, as defined herein, then the enforcement officer shall notify the owner of that finding, and of the possible penalties for violating this code.

(2) The notice to be given to the owner shall be in writing and shall be sent to the owner by registered or certified mail, return receipt requested, the notice being addressed to the address of the owner as reflected upon the tax records of the county. If the name

or whereabouts, either or both, of the owner are unknown, the building inspector shall cause a notice to be posted upon the premises for a period of 45 days, and this shall serve as legal notice to said owner.

(Ord. No. 200509-1o, § 102, 9-6-2005; Ord. No. 200604-1o, § 102, 4-18-2006; Ord. No. 2009-06, 4-7-2009)

* To qualify for "agricultural purposes" as used herein above, the building or structure in question must sit on a tract or parcel of land consisting of a minimum of five (5) acres.

Sec. 18-228. Determination of violation.

(a) If after 45 days from receipt of the notice (refusal to accept delivery being tantamount to receipt) or from the first day of posting the notice, as the case may be, the owner of the property shall fail or refuse to respond to the notice from the enforcement officer, then the owner shall be deemed in violation, and the building demolished as provided herein.

(b) If the owner responds to the enforcement officer's notice within the time provided, and expresses an intention to correct the dangerous condition, then the owner shall be given 90 days from such response to make any such corrections. If at the end of 90 days the corrections have not been completed, the enforcement officer may, in his or her discretion, grant a reasonable extension to complete the same. Such extension shall not be granted unless the enforcement officer finds that the owner is proceeding reasonably and in good faith, and that substantial progress is being made.

(Ord. No. 200509-1o, § 103, 9-6-2005; Ord. No. 200604-1o, § 103, 4-18-2006; Ord. No. 2009-06, 4-7-2009)

Sec. 18-229. Right of appeal.

(a) *Appellate procedure.* Any person receiving written notice from the enforcement officer of deficiencies in their property under this code may enter an appeal in writing to the board of appeals and adjustments. Appeals shall be filed with the enforcement officer within 45 days of the date of the notice, and must be accompanied by an appellate review fee of $100.00. Appeals shall state the location of the property, the date of the notice of violations, and the nature of such violation cited. The appellant must state the variance or modification requested, the reasons therefore, and the hardship or conditions upon which the appeal is made.

(b) *Appeals limited.* No appeal shall be considered where an appeal has been previously decided involving the same violations at the same premises.

(c) *Board of appeals and adjustments.* The board of appeals and adjustments shall consist of five members to be selected by the Jones County Board of Commissioners.

(d) *Secretary of the board.* The enforcement officer shall act as secretary for the board of appeals and adjustments and shall make a detailed record of all of its proceedings. Such records shall set forth the reasons for decisions by the board, the vote of each member, the absence of a member, and any failure of a member to vote.

(e) *Quorum and voting.* Three members of the board of appeals and adjustments shall constitute a quorum. In varying any provision of this code, or in modifying any ruling of the enforcement officer, the majority vote of the members present shall prevail.

(f) *Powers.* The board of appeals and adjustments shall have the power, as further defined in this code, to hear appeals of decisions, interpretations, and rulings of the enforcement officer; to consider alternate materials and methods to meet the intent of this code; and to consider variances of provisions of this code.

(g) *Decisions of the board.* The board of appeals and adjustments shall, in every case, reach a decision without unreasonable or unnecessary delay. Each decision of the board shall also include the reasons for the decision. If a decision of the board reverses or modifies a refusal, order, or disallowance of the enforcement officer or varies the application of any provision of the Code, the enforcement officer shall immediately take action in accordance with such decision. Every decision shall be promptly filed in writing in the office of the enforcement officer and shall be open to public inspection. A certified copy of the decision shall be sent by mail or otherwise to the appellant and a copy shall be kept on record in the office of the enforcement officer. Every decision of the board is final.
(Ord. No. 200509-1o, § 104, 9-6-2005; Ord. No. 200604-1o, § 104, 4-18-2006; Ord. No. 2009-06, 4-7-2009)

Sec. 18-230. Implementation.

(a) *Order to repair or demolish.* If the board of appeals and adjustments, on the basis of a hearing, determines that the building is unsafe and is a public nuisance, or if there is no appeal of the building inspector's determination and report, an order shall be served by the enforcement officer upon the owner if a resident of the county, requiring the owner, within a reasonable time specified therein not exceeding 60 days, to demolish the structure. If the owner shall be a nonresident of the county or if the name or address, either or both, are unknown, a copy of the order shall be posted upon the unsafe building, and mailed to the owner's last known address, if any exists on the public records.

(b) *Enforcement of order, lien.*

(1) If the owner shall fail to repair or demolish the unsafe building as required by this code, the enforcement officer is authorized to cause such unsafe building to be demolished.

(2) Upon completion of demolition, the enforcement officer shall advise the owner by registered or certified mail, return receipt requested, if his name and address is shown upon the tax records of the county or otherwise known, the cost of such demolition and the owner shall have 30 days from the mailing of such notice within which to pay the cost. If the name of the owner or his address, either or both, are unknown, the enforcement officer shall cause a like notice to be posted upon the property and the owner shall have 30 days from the date of posting in which to pay the costs of demolition.

(3) If the owner shall fail to pay the costs within the time allowed, the enforcement officer shall notify the tax commissioner of the county who shall thereupon issue an execution for the costs of demolition plus the costs of recording the execution, which execution shall be recorded in the general execution docket of the office of the clerk of the superior court of the county.

(4) Executions shall bear such interest, have such priority and lien, and shall be enforceable in all respects as are executions issued for ad valorem taxes due the county.

(5) Any monies received from the sale of property or from the demolition shall be paid to the owner of record or other persons lawfully entitled thereto, minus the costs of demolition or repair and any other costs directly incurred by the county.

(Ord. No. 200509-1o, § 105, 9-6-2005; Ord. No. 200604-1o, § 105, 4-18-2006; Ord. No. 2009-06, 4-7-2009)

Secs. 18-231—18-250. Reserved.

ARTICLE VII. STORMWATER MANAGEMENT*

DIVISION 1. GENERALLY

Sec. 18-251. Purpose and intent.

The purpose of this article is to protect, maintain and enhance the public health, safety, environment and general welfare by establishing minimum requirements and procedures to control the adverse effects of increased post-development stormwater runoff and nonpoint source pollution associated with new development and redevelopment. It has been determined that proper management of post-development stormwater runoff will minimize damage to public and private property and infrastructure, safeguard the public health, safety, environment and general welfare of the public, and protect water and aquatic resources. This seeks to meet that purpose through the following objectives:

(1) Establish decision-making processes surrounding land development activities that protect the integrity of the watershed and preserve the health of water resources;

(2) Require that new development and redevelopment maintain the pre-development hydrologic response in their post-development state as nearly as practicable in order to reduce flooding, streambank erosion, nonpoint source pollution and increases in stream temperature, and maintain the integrity of stream channels and aquatic habitats;

***Editor's note—**Ord. No. 200612-1o, §§ 1—7, adopted Dec. 5, 2006, amended Art. VII in its entirety, in effect deleting the former Art. VII as being superseded by said provisions. These provisions have been included as Art. VII to read as set out herein. Former Art. VII pertained to similar subject matter and derived from Ord. No. 200603-1o, §§ 1—7, adopted Mar. 7, 2006.

(3) Establish minimum post-development stormwater management standards and design criteria for the regulation and control of stormwater runoff quantity and quality;

(4) Establish design and application criteria for the construction and use of structural stormwater control facilities that can be used to meet the minimum post-development stormwater management standards;

(5) Encourage the use of nonstructural stormwater management and stormwater better site design practices, such as the preservation of greenspace and other conservation areas, to the maximum extent practicable. Coordinate site design plans, which include greenspace, with the county's greenspace protection plan;

(6) Establish provisions for the long-term responsibility for and maintenance of structural stormwater control facilities and nonstructural stormwater management practices to ensure that they continue to function as designed, are maintained, and pose no threat to public safety; and,

(7) Establish administrative procedures for the submission, review, approval and disapproval of stormwater management plans, and for the inspection of approved active projects, and long-term follow up.

(Ord. No. 200612-1o, § 1.1, 12-5-2006)

Sec. 18-252. Applicability.

(a) This article shall be applicable to all land development within the MS4 area of Jones County, including, but not limited to, site plan applications, subdivision applications, and grading applications, unless exempt pursuant to subsection (b) below. These standards apply to any new development or redevelopment site that meets one or more of the following criteria:

(1) New development that involves the creation of 5,000 square feet or more of impervious cover, or that involves other land development activities of one acre or more;

(2) Redevelopment that includes the creation, addition or replacement of 5,000 square feet or more of impervious cover, or that involves other land development activity of one acre or more;

(3) Any new development or redevelopment, regardless of size, that is defined by the zoning director to be a hotspot land use; or,

(4) Land development activities that are smaller than the minimum applicability criteria set forth in items (1) and (2) above if such activities are part of a larger common plan of development, even though multiple, separate and distinct land development activities may take place at different times on different schedules.

(b) The following activities are exempt from this article:

(1) Individual single-family or duplex residential lots that are not part of a subdivision or phased development project;

(2) Additions or modifications to existing single-family or duplex residential structures;

(3) Agricultural or silvicultural land management activities within areas zoned for these activities;

(4) Repairs to any stormwater management facility or practice deemed necessary by the zoning director; and,

(5) Any project outside of the MS4 area of Jones County.

(Ord. No. 200612-1o, § 1.2, 12-5-2006)

Sec. 18-253. Designation of article administrator.

The zoning director or any county employee designated by the zoning director is hereby appointed to administer and implement the provisions of this article.

(Ord. No. 200612-1o, § 1.3, 12-5-2006)

Sec. 18-254. Compatibility with other regulations.

This article is not intended to modify or repeal any other ordinance, rule, regulation or other provision of law. The requirements of this article are in addition to the requirements of any other ordinance, rule, regulation or other provision of law, and where any provision of this article imposes restrictions different from those imposed by any other ordinance, rule, regulation or other provision of law, whichever provision is more restrictive or imposes higher protective standards for human health or the environment shall control.

(Ord. No. 200612-1o, § 1.4, 12-5-2006)

Sec. 18-255. Severability.

If the provisions of any section, subsection, paragraph, subdivision or clause of this article shall be adjudged invalid by a court of competent jurisdiction, such judgment shall not affect or invalidate the remainder of any section, subsection, paragraph, subdivision or clause of this article.

(Ord. No. 200612-1o, § 1.5, 12-5-2006)

Sec. 18-256. Stormwater design manual.

The zoning director or any county employee designated by the zoning director will utilize the policy, criteria and information including technical specifications and standards in the latest edition of the Georgia Stormwater Management Manual and any relevant local addenda for the proper implementation of the requirements of this article. The manual may be updated and expanded periodically, based on improvements in science, engineering, monitoring and local maintenance experience.

(Ord. No. 200612-1o, § 1.6, 12-5-2006)

Sec. 18-257. Definitions.

Applicant means a person submitting a post-development stormwater management application and plan for approval.

Channel means a natural or artificial watercourse with a definite bed and banks that conducts continuously or periodically flowing water.

Conservation easement means an agreement between a land owner and Jones County or other government agency or land trust that permanently protects open space or greenspace on the owner's land by limiting the amount and type of development that can take place, but continues to leave the remainder of the fee interest in private ownership.

Detention means the temporary storage of stormwater runoff in a stormwater management facility for the purpose of controlling the peak discharge.

Detention facility means a detention basin or structure designed for the detention of stormwater runoff and gradual release of stored water at controlled rates.

Developer means a person who undertakes land development activities.

Development means a land development or land development project.

Drainage easement means an easement appurtenant or attached to a tract or parcel of land allowing the owner of adjacent tracts or other persons to discharge stormwater runoff onto the tract or parcel of land subject to the drainage easement.

Erosion and sedimentation control plan means a plan that is designed to minimize the accelerated erosion and sediment runoff at a site during land disturbance activities.

Extended detention means the detention of stormwater runoff for an extended period, typically 24 hours or greater.

Extreme flood protection means measures taken to prevent adverse impacts from large low-frequency storm events with a return frequency of 100 years or more.

Flooding means a volume of surface water that is too great to be confined within the banks or walls of a conveyance or stream channel and that overflows onto adjacent lands.

Greenspace or open space means permanently protected areas of the site that are preserved in a natural state.

Hotspot means an area where the use of the land has the potential to generate highly contaminated runoff, with concentrations of pollutants in excess of those typically found in stormwater.

Hydrologic soil group (HSG) means a natural resource conservation service classification system in which soils are categorized into four runoff potential groups. The groups range from group A soils, with high permeability and little runoff produced, to group D soils, which have low permeability rates and produce much more runoff.

Impervious cover means a surface composed of any material that significantly impedes or prevents the natural infiltration of water into soil. Impervious surfaces include, but are not limited to, rooftops, buildings, streets and roads, and any concrete or asphalt surface.

Industrial stormwater permit means a national pollutant discharge elimination system (NPDES) permit issued to an industry or group of industries which regulates the pollutant levels associated with industrial stormwater discharges or specifies on-site pollution control strategies.

Infiltration means the process of percolating stormwater runoff into the subsoil.

Jurisdictional wetland means an area that is inundated or saturated by surface water or groundwater at a frequency and duration sufficient to support a prevalence of vegetation typically adapted for life in saturated soil conditions, commonly known as hydrophytic vegetation.

Land development means any land change, including, but not limited to, clearing, digging, grubbing, stripping, removal of vegetation, dredging, grading, excavating, transporting and filling of land, construction, paving, and any other installation of impervious cover.

Land development activities means those actions or activities which comprise, facilitate or result in land development.

Land development project means a discrete land development undertaking.

Inspection and maintenance agreement means a written agreement providing for the long-term inspection and maintenance of stormwater management facilities and practices on a site or with respect to a land development project, which when properly recorded in the deed records constitutes a restriction on the title to a site or other land involved in a land development project.

New development means a land development activity on a previously undeveloped site.

Nonpoint source pollution means a form of water pollution that does not originate from a discrete point such as a sewage treatment plant or industrial discharge, but involves the transport of pollutants such as sediment, fertilizers, pesticides, heavy metals, oil, grease, bacteria, organic materials and other contaminants from land to surface water and groundwater via mechanisms such as precipitation, stormwater runoff, and leaching. Nonpoint source pollution is a by-product of land use practices such as agricultural, silvicultural, mining, construction, subsurface disposal and urban runoff sources.

Nonstructural stormwater management practice or nonstructural practice means any natural or planted vegetation or other nonstructural component of the stormwater management plan that provides for or enhances stormwater quantity and/or quality control or other stormwater management benefits, and includes, but is not limited to, riparian buffers, open and greenspace areas, overland flow filtration areas, natural depressions, and vegetated channels.

Off-site facility means a stormwater management facility located outside the boundaries of the site.

On-site facility means a stormwater management facility located within the boundaries of the site.

Overbank flood protection means measures taken to prevent an increase in the frequency and magnitude of out-of-bank flooding (i.e. flow events that exceed the capacity of the channel and enter the floodplain), and that are intended to protect downstream properties from flooding for the two-year through 25-year frequency storm events.

Owner means the legal or beneficial owner of a site, including but not limited to, a mortgagee or vendee in possession, receiver, executor, trustee, lessee or other person, firm or corporation in control of the site.

Permit means the permit issued by Jones County to the applicant which is required for undertaking any land development activity.

Person means, except to the extent exempted from this article, any individual, partnership, firm, association, joint venture, public or private corporation, trust, estate, commission, board, public or private institution, utility, cooperative, city, county or other political subdivision of the State, any interstate body or any other legal entity.

Post-development refers to the time period, or the conditions that may reasonably be expected or anticipated to exist, after completion of the land development activity on a site as the context may require.

Pre-development refers to the time period, or the conditions that exist, on a site prior to the commencement of a land development project and at the time that plans for the land development of a site are approved by the plan approving authority. Where phased development or plan approval occurs (preliminary grading, roads and utilities, etc.), the existing conditions at the time prior to the first item being approved or permitted shall establish pre-development conditions.

Project means a land development project.

Redevelopment means a land development project on a previously developed site, but excludes ordinary maintenance activities, remodeling of existing buildings, resurfacing of paved areas, and exterior changes or improvements which do not materially increase or concentrate stormwater runoff, or cause additional nonpoint source pollution.

Regional stormwater management facility or regional facility means stormwater management facilities designed to control stormwater runoff from multiple properties, where the owners or developers of the individual properties may assist in the financing of the facility, and the requirement for on-site controls is either eliminated or reduced.

Runoff means stormwater runoff.

Site means the parcel of land being developed, or the portion thereof on which the land development project is located.

Stormwater better site design means nonstructural site design approaches and techniques that can reduce a site's impact on the watershed and can provide for nonstructural stormwater management. Stormwater better site design includes conserving and protecting natural areas and greenspace, reducing impervious cover and using natural features for stormwater management.

Stormwater management means the collection, conveyance, storage, treatment and disposal of stormwater runoff in a manner intended to prevent increased flood damage, streambank channel erosion, habitat degradation and water quality degradation, and to enhance and promote the public health, safety and general welfare.

Stormwater management facility means any infrastructure that controls or conveys stormwater runoff.

Stormwater management measure means any stormwater management facility or nonstructural stormwater practice.

Stormwater management plan means a document describing how existing runoff characteristics will be affected by a land development project and containing measures for complying with the provisions of this article.

Stormwater management system means the entire set of structural and nonstructural stormwater management facilities and practices that are used to capture, convey and control the quantity and quality of the stormwater runoff from a site.

Stormwater retrofit means a stormwater management practice designed for a currently developed site that previously had either no stormwater management practice in place or a practice inadequate to meet the stormwater management requirements of the site.

Stormwater runoff means the flow of surface water resulting from precipitation.

Structural stormwater control means a structural stormwater management facility or device that controls stormwater runoff and changes the characteristics of that runoff including, but not limited to, the quantity and quality, the period of release or the velocity of flow of such runoff.

Subdivision means the division of a tract or parcel of land resulting in one or more new lots or building sites for the purpose, whether immediately or in the future, of sale, other transfer of ownership or land development, and includes divisions of land resulting from or made in connection with the layout or development of a new street or roadway or a change in an existing street or roadway.
(Ord. No. 200612-1o, § 2, 12-5-2006)

Secs. 18-258—18-270. Reserved.

DIVISION 2. PERMIT PROCEDURES AND REQUIREMENTS

Sec. 18-271. Permit application requirements.

No owner or developer shall perform any land development activities without first meeting the requirements of this article prior to commencing the proposed activity.

Unless specifically exempted by this article, any owner or developer proposing a land development activity shall submit to Jones County a permit application on a form provided by Jones County for that purpose.

Unless otherwise exempted by this article, a permit application shall be accompanied by the following items in order to be considered:

Stormwater concept plan and consultation meeting certification in accordance with section 18-272;

Stormwater management plan in accordance with section 18-273;

Inspection and maintenance agreement in accordance with section 18-274, if applicable;

Performance bond in accordance with section 18-275, if applicable; and,

Permit application and plan review fees in accordance with section 18-276.
(Ord. No. 200612-1o, § 3.1, 12-5-2006)

Sec. 18-272. Stormwater concept plan and consultation meeting.

Before any stormwater management permit application is submitted, it is recommended that the land owner or developer meet with the zoning director for a consultation meeting on a concept plan for the post-development stormwater management system to be utilized in the proposed land development project. This consultation meeting should take place at the time of the preliminary plan of subdivision or other early step in the development process. The purpose of this meeting is to discuss the post-development stormwater management measures necessary for the proposed project, as well as to discuss and assess constraints, opportunities and potential ideas for stormwater management designs before the formal site design engineering is commenced.

To accomplish this goal the following information should [shall] be included in the concept plan which should [shall] be submitted in advance of the meeting:

(1) *Existing conditions/proposed site plans.* Existing conditions and proposed site layout sketch plans, which illustrate at a minimum: existing and proposed topography; perennial and intermittent streams; mapping of predominant soils from soil surveys (when available); boundaries of existing predominant vegetation and proposed limits of clearing and grading; and location of existing and proposed roads, buildings, parking areas and other impervious surfaces.

(2) *Natural resources inventory.* A written or graphic inventory of the natural resources at the site and surrounding area as it exists prior to the commencement of the project. This description should include a discussion of soil conditions, forest cover, topography, wetlands, and other native vegetative areas on the site, as well as the location and boundaries of other natural feature protection and conservation areas such as wetlands, lakes, ponds, floodplains, stream buffers and other setbacks (e.g., drinking water well setbacks, septic setbacks, etc.). Particular attention should be paid to environmentally sensitive features that provide particular opportunities or constraints for development.

(3) *Stormwater management system concept plan.* A written or graphic concept plan of the proposed post-development stormwater management system including: preliminary

selection and location of proposed structural stormwater controls; location of existing and proposed conveyance systems such as grass channels, swales, and storm drains; flow paths; location of floodplain/floodway limits; relationship of site to upstream and downstream properties and drainages; and preliminary location of proposed stream channel modifications, such as bridge or culvert crossings.

(4) *Potential water quality impact considerations.* A site plan that addresses potential water quality impacts of the proposed project will be included.

Local watershed plans, Jones County greenspace projection plan (if applicable), and any relevant resource protection plans will be consulted in the discussion of the concept plan. (Ord. No. 200612-1o, § 3.2, 12-5-2006)

Sec. 18-273. Stormwater management plan requirements.

The stormwater management plan shall detail how post-development stormwater runoff will be controlled or managed and how the proposed project will meet the requirements of this article, including the performance criteria set forth in division 3 below.

This plan shall be in accordance with the criteria established in this section and must be submitted with the stamp and signature of a professional engineer (PE) licensed in the State of Georgia, who must verify that the design of all stormwater management facilities and practices meet the submittal requirements outlined in the submittal checklist(s) found in the stormwater design manual.

The stormwater management plan must ensure that the requirements and criteria in this article are being complied with and that opportunities are being taken to minimize adverse post-development stormwater runoff impacts from the development. The plan shall consist of maps, narrative, and supporting design calculations (hydrologic and hydraulic) for the proposed stormwater management system. The plan shall include all of the information required in the stormwater management site plan checklist found in the stormwater design manual. This includes:

(1) Common address and legal description of site;

(2) Vicinity map;

(3) *Existing conditions hydrologic analysis.* The existing condition hydrologic analysis for stormwater runoff rates, volumes, and velocities, which shall include: a topographic map of existing site conditions with the drainage basin boundaries indicated; acreage, soil types and land cover of areas for each subbasin affected by the project; all perennial and intermittent streams and other surface water features; all existing stormwater conveyances and structural control facilities; direction of flow and exits from the site; analysis of runoff provided by off-site areas upstream of the project site; and methodologies, assumptions, site parameters and supporting design calculations used in analyzing the existing conditions site hydrology. For redevelopment sites, predevelopment conditions shall be modeled using the established guidelines for the portion of the site undergoing land development activities.

(4) *Post-development hydrologic analysis.* The post-development hydrologic analysis for stormwater runoff rates, volumes, and velocities, which shall include: a topographic map of developed site conditions with the post-development drainage basin boundaries indicated; total area of post-development impervious surfaces and other land cover areas for each subbasin affected by the project; calculations for determining the runoff volumes that need to be addressed for each subbasin for the development project to meet the post-development stormwater management performance criteria in division 3; location and boundaries of proposed natural feature protection and conservation areas; documentation and calculations for any applicable site design credits that are being utilized; methodologies, assumptions, site parameters and supporting design calculations used in analyzing the existing conditions site hydrology. If the land development activity on a redevelopment site constitutes more than 50 percent of the site area for the entire site, then the performance criteria in division 3 must be met for the stormwater runoff from the entire site.

(5) *Stormwater management system.* The description, scaled drawings and design calculations for the proposed post-development stormwater management system, which shall include: A map and/or drawing or sketch of the stormwater management facilities, including the location of nonstructural site design features and the placement of existing and proposed structural stormwater controls, including design water surface elevations, storage volumes available from zero to maximum head, location of inlet and outlets, location of bypass and discharge systems, and all orifice/restrictor sizes; a narrative describing how the selected structural stormwater controls will be appropriate and effective; cross-section and profile drawings and design details for each of the structural stormwater controls in the system, including supporting calculations to show that the facility is designed according to the applicable design criteria; a hydrologic and hydraulic analysis of the stormwater management system for all applicable design storms (including stage-storage or outlet rating curves, and inflow and outflow hydrographs); documentation and supporting calculations to show that the stormwater management system adequately meets the post-development stormwater management performance criteria in division 3; drawings, design calculations, elevations and hydraulic grade lines for all existing and proposed stormwater conveyance elements including stormwater drains, pipes, culverts, catch basins, channels, swales and areas of overland flow; and where applicable, a narrative describing how the stormwater management system corresponds with any watershed protection plans and/or local greenspace protection plan.

(6) *Post-development downstream analysis.* A downstream peak flow analysis which includes the assumptions, results and supporting calculations to show safe passage of post-development design flows downstream. The analysis of downstream conditions in the report shall address each and every point or area along the project site's boundaries at which runoff will exit the property. The analysis shall focus on the portion of the drainage channel or watercourse immediately downstream from the project. This area shall extend downstream from the project to a point in the drainage

basin where the project area is ten percent of the total basin area. In calculating runoff volumes and discharge rates, consideration may need to be given to any planned future upstream land use changes. The analysis shall be in accordance with the stormwater design manual.

(7) *Construction-phase erosion and sedimentation control plan.* An erosion and sedimentation control plan in accordance with the Georgia Erosion and Sedimentation Control Act (or reference to the local erosion and sedimentation control ordinance) or NPDES permit for construction activities. The plan shall also include information on the sequence/phasing of construction and temporary stabilization measures and temporary structures that will be converted into permanent stormwater controls.

(8) *Landscaping and open space plan.* A detailed landscaping and vegetation plan describing the woody and herbaceous vegetation that will be used within and adjacent to stormwater management facilities and practices. The landscaping plan must also include: the arrangement of planted areas, natural and greenspace areas and other landscaped features on the site plan; information necessary to construct the landscaping elements shown on the plan drawings; descriptions and standards for the methods, materials and vegetation that are to be used in the construction; density of plantings; descriptions of the stabilization and management techniques used to establish vegetation; and a description of who will be responsible for ongoing maintenance of vegetation for the stormwater management facility and what practices will be employed to ensure that adequate vegetative cover is preserved.

(9) *Operations and maintenance plan.* Detailed description of ongoing operations and maintenance procedures for stormwater management facilities and practices to ensure their continued function as designed and constructed or preserved. These plans will identify the parts or components of a stormwater management facility or practice that need to be regularly or periodically inspected and maintained, and the equipment and skills or training necessary. The plan shall include an inspection and maintenance schedule, maintenance tasks, responsible parties for maintenance, funding, access and safety issues. Provisions for the periodic review and evaluation of the effectiveness of the maintenance program and the need for revisions or additional maintenance procedures shall be included in the plan.

(10) *Maintenance access easements.* The applicant must ensure access from public right-of-way to stormwater management facilities and practices requiring regular maintenance at the site for the purpose of inspection and repair by securing all the maintenance access easements needed on a permanent basis. Such access shall be sufficient for all necessary equipment for maintenance activities. Upon final inspection and approval, a plat or document indicating that such easements exist shall be recorded and shall remain in effect even with the transfer of title of the property.

(11) *Inspection and maintenance agreements.* Unless an on-site stormwater management facility or practice is dedicated to and accepted by Jones County as provided in section

18-274 below, the applicant must execute an easement and an inspection and maintenance agreement binding on all subsequent owners of land served by an on-site stormwater management facility or practice in accordance section 18-274.

(12) *Evidence of acquisition of applicable local and non-local permits.* The applicant shall certify and provide documentation to the zoning director that all other applicable environmental permits have been acquired for the site prior to approval of the stormwater management plan.

(13) *Pollution control plan.* All projects not exempted by this article must comply with the national pollutant discharge elimination system (NPDES) permit for construction activities (General Permit No. GAR 100000). A copy of the pollution control plan that has been developed to comply with the NPDES program shall be required.

(Ord. No. 200612-1o, § 3.3, 12-5-2006)

Sec. 18-274. Stormwater management inspection and maintenance agreements.

Prior to the issuance of any permit for a land development activity requiring a stormwater management facility or practice hereunder and for which Jones County requires ongoing maintenance, the applicant or owner of the site must, unless an on-site stormwater management facility or practice is dedicated to and accepted by Jones County, execute an inspection and maintenance agreement, and/or a conservation easement, if applicable, that shall be binding on all subsequent owners of the site.

The inspection and maintenance agreement, if applicable, must be approved by the zoning director prior to plan approval, and recorded in the deed records upon final plat approval.

The inspection and maintenance agreement shall identify by name or official title the person(s) responsible for carrying out the inspection and maintenance. Responsibility for the operation and maintenance of the stormwater management facility or practice, unless assumed by a governmental agency, shall remain with the property owner and shall pass to any successor owner. If portions of the land are sold or otherwise transferred, legally binding arrangements shall be made to pass the inspection and maintenance responsibility to the appropriate successors in title. These arrangements shall designate for each portion of the site, the person to be permanently responsible for its inspection and maintenance.

As part of the inspection and maintenance agreement, a schedule shall be developed for when and how often routine inspection and maintenance will occur to ensure proper function of the stormwater management facility or practice. The agreement shall also include plans for annual inspections to ensure proper performance of the facility between scheduled maintenance and shall also includeremedies for the default thereof.

In addition to enforcing the terms of the inspection and maintenance agreement, the zoning director or any county employee designated by the zoning director may also enforce all of the provisions for ongoing inspection and maintenance in division 5 of this article.

Jones County, in lieu of an inspection and maintenance agreement, may accept dedication of any existing or future stormwater management facility for maintenance, provided such facility meets all the requirements of this article and includes adequate and perpetual access and sufficient area, by easement or otherwise, for inspection and regular maintenance.
(Ord. No. 200612-1o, § 3.4, 12-5-2006)

Sec. 18-275. Performance and maintenance bonds.

(a) *Application procedure.*

(1) Applications for land development permits shall be filed with the zoning director.

(2) Permit applications shall include the items set forth in section 18-271 above (two copies of the stormwater management plan and the inspection maintenance agreement, if applicable, shall be included).

(3) The zoning director shall inform the applicant whether the application, stormwater management plan and inspection and maintenance agreement are approved or disapproved.

(4) If either the permit application, stormwater management plan or inspection and maintenance agreement are disapproved, the zoning director shall notify the applicant of such fact in writing. The applicant may then revise any item not meeting the requirements hereof and resubmit the same, in which event subsection (3) above and this subsection shall apply to such resubmittal.

(5) Upon a finding by the zoning director that the permit application, stormwater management plan and inspection and maintenance agreement, if applicable, meet the requirements of this article, the zoning director may issue a permit for the land development project, provided all other legal requirements for the issuance of such permit have been met.

(6) Notwithstanding the issuance of the permit, in conducting the land development project, the applicant or other responsible person shall be subject to the following requirements:

a. The applicant shall comply with all applicable requirements of the approved plan and this article and shall certify that all land clearing, construction, land development and drainage will be done according to the approved plan;

b. The land development project shall be conducted only within the area specified in the approved plan;

c. The zoning director or any county employee designated by the zoning director shall be allowed to conduct periodic inspections of the project;

d. No changes may be made to an approved plan without review and written approval by the zoning director; and,

e. Upon completion of the project, the applicant or other responsible person shall submit the engineer's report and certificate and as-built plans required by section 18-312.

(b) *Application review fees.* The fee for review of any stormwater management application shall be based on the fee structure established by Jones County and shall be made prior to the issuance of any building permit for the development.

(c) *Modifications for off-site facilities.* The stormwater management plan for each land development project shall provide for stormwater management measures located on the site of the project, unless provisions are made to manage stormwater by an off-site or regional facility. The off-site or regional facility must be located on property legally dedicated for the purpose, must be designed and adequately sized to provide a level of stormwater quantity and quality control that is equal to or greater than that which would be afforded by on-site practices and there must be a legally-obligated entity responsible for long-term operation and maintenance of the off-site or regional stormwater facility. In addition, on-site measures shall be implemented, where necessary, to protect upstream and downstream properties and drainage channels from the site to the off-site facility.

A stormwater management plan must be submitted to the zoning director which shows the adequacy of the off-site or regional facility.

To be eligible for a modification, the applicant must demonstrate to the satisfaction of the zoning director that the use of an off-site or regional facility will not result in the following impacts to upstream or downstream areas:

(1) Increased threat of flood damage to public health, life, and property;

(2) Deterioration of existing culverts, bridges, dams, and other structures;

(3) Accelerated streambank or streambed erosion or siltation;

(4) Degradation of in-stream biological functions or habitat; or

(5) Water quality impairment in violation of state water quality standards, and/or violation of any state or federal regulations.

(Ord. No. 200612-1o, § 3.5, 12-5-2006)

Sec. 18-276. Application procedure.

(a) Applications for land development permits shall be filed with the zoning director.

(b) Permit applications shall include the items set forth in section 18-271 above (two copies of the stormwater management plan and the inspection maintenance agreement, if applicable, shall be included).

(c) The zoning director shall inform the applicant whether the application, stormwater management plan and inspection and maintenance agreement are approved or disapproved.

(d) If either the permit application, stormwater management plan or inspection and maintenance agreement are disapproved, the zoning director shall notify the applicant of such fact in writing. The applicant may then revise any item not meeting the requirements hereof and resubmit the same, in which event subsection (c) above and this subsection shall apply to such resubmittal.

(e) Upon a finding by the zoning director that the permit application, stormwater management plan and inspection and maintenance agreement, if applicable, meet the requirements of this article, the zoning director may issue a permit for the land development project, provided all other legal requirements for the issuance of such permit have been met.

(f) Notwithstanding the issuance of the permit, in conducting the land development project, the applicant or other responsible person shall be subject to the following requirements:

(1) The applicant shall comply with all applicable requirements of the approved plan and this article and shall certify that all land clearing, construction, land development and drainage will be done according to the approved plan;

(2) The land development project shall be conducted only within the area specified in the approved plan;

(3) The zoning director or any county employee designated by the zoning director shall be allowed to conduct periodic inspections of the project;

(4) No changes may be made to an approved plan without review and written approval by the zoning director; and,

(5) Upon completion of the project, the applicant or other responsible person shall submit the engineer's report and certificate and as-built plans required by section 18-312.

(Ord. No. 200612-1o, § 3.6, 12-5-2006)

Sec. 18-277. Application review fees.

The fee for review of any stormwater management application shall be based on the fee structure established by Jones County and shall be made prior to the issuance of any building permit for the development.

(Ord. No. 200612-1o, § 3.7, 12-5-2006)

Sec. 18-278. Modifications for off-site facilities.

The stormwater management plan for each land development project shall provide for stormwater management measures located on the site of the project, unless provisions are made to manage stormwater by an off-site or regional facility. The off-site or regional facility must be located on property legally dedicated for the purpose, must be designed and adequately sized to provide a level of stormwater quantity and quality control that is equal to or greater than that which would be afforded by on-site practices and there must be a legally-obligated entity responsible for long-term operation and maintenance of the off-site or

regional stormwater facility. In addition, on-site measures shall be implemented, where necessary, to protect upstream and downstream properties and drainage channels from the site to the off-site facility.

A stormwater management plan must be submitted to the zoning director which shows the adequacy of the off-site or regional facility.

To be eligible for a modification, the applicant must demonstrate to the satisfaction of the zoning director that the use of an off-site or regional facility will not result in the following impacts to upstream or downstream areas:

(1) Increased threat of flood damage to public health, life, and property;

(2) Deterioration of existing culverts, bridges, dams, and other structures;

(3) Accelerated streambank or streambed erosion or siltation;

(4) Degradation of in-stream biological functions or habitat; or

(5) Water quality impairment in violation of state water quality standards, and/or violation of any state or federal regulations.

(Ord. No. 200612-1o, § 3.8, 12-5-2006)

Secs. 18-279—18-290. Reserved.

DIVISION 3. POST-DEVELOPMENT STORMWATER MANAGEMENT PERFORMANCE CRITERIA

Sec. 18-291. Applicability.

The following performance criteria shall be applicable to all stormwater management plans, unless otherwise provided for in this article.

(Ord. No. 200612-1o, § 4, 12-5-2006)

Sec. 18-292. Water quality.

All stormwater runoff generated from a site shall be adequately treated before discharge. It will be presumed that a stormwater management system complies with this requirement if:

It is sized to treat the prescribed water quality treatment volume from the site, as defined in the Georgia Stormwater Management Manual;

Appropriate structural stormwater controls or nonstructural practices are selected, designed, constructed or preserved, and maintained according to the specific criteria in the Georgia Stormwater Management Manual; and,

Runoff from hotspot land uses and activities identified by the zoning director are adequately treated and addressed through the use of appropriate structural stormwater controls, nonstructural practices and pollution prevention practices.

(Ord. No. 200612-1o, § 4.1, 12-5-2006)

Sec. 18-293. Stream channel protection.

Protection of stream channels from bank and bed erosion and degradation shall be provided by using all of the following three approaches:

Preservation, restoration and/or reforestation (with native vegetation) of the applicable stream buffer;

24-hour extended detention storage of the 1-year, 24-hour return frequency storm event;

Erosion prevention measures such as energy dissipation and velocity control.
(Ord. No. 200612-1o, § 4.2, 12-5-2006)

Sec. 18-294. Overbank flooding protection.

Downstream overbank flood and property protection shall be provided by controlling (attenuating) the post-development peak discharge rate to the pre-development rate for the 25-year, 24-hour return frequency storm event. If control of the 1-year, 24-hour storm under section 18-293 is exempted, then peak discharge rate attenuation of the two-year through the 25-year return frequency storm event must be provided.
(Ord. No. 200612-1o, § 4.3, 12-5-2006)

Sec. 18-295. Extreme flooding protection.

Extreme flood and public safety protection shall be provided by controlling and safely conveying the 100-year, 24-hour return frequency storm event such that flooding is not exacerbated.
(Ord. No. 200612-1o, § 4.4, 12-5-2006)

Sec. 18-296. Structural stormwater controls.

All structural stormwater management facilities shall be selected and designed using the appropriate criteria from the Georgia Stormwater Management Manual. All structural stormwater controls must be designed appropriately to meet their intended function. For other structural stormwater controls not included in the Georgia Stormwater Management Manual, or for which pollutant removal rates have not been provided, the effectiveness and pollutant removal of the structural control must be documented through prior studies, literature reviews, or other means and receive approval from the zoning director before being included in the design of a stormwater management system. In addition, if hydrologic or topographic conditions, or land use activities warrant greater control than that provided by the minimum control requirements, the zoning director may impose additional requirements deemed necessary to protect upstream and downstream properties and aquatic resources from damage due to increased volume, frequency, and rate of stormwater runoff or increased nonpoint source pollution loads created on the site in question.

Applicants shall consult the Georgia Stormwater Management Manual for guidance on the factors that determine site design feasibility when selecting and locating a structural stormwater control.
(Ord. No. 200612-1o, § 4.5, 12-5-2006)

Sec. 18-297. Stormwater credits for nonstructural measures.

The use of one or more site design measures by the applicant may allow for a reduction in the water quality treatment volume required under section 18-292. The applicant may, if approved by the zoning director, take credit for the use of stormwater better site design practices and reduce the water quality volume requirement. For each potential credit, there is a minimum set of criteria and requirements which identify the conditions or circumstances under which the credit may be applied. The site design practices that qualify for this credit and the criteria and procedures for applying and calculating the credits are included in the Georgia Stormwater Management Manual.
(Ord. No. 200612-1o, § 4.6, 12-5-2006)

Sec. 18-298. Drainage system guidelines.

Stormwater conveyance facilities, which may include but are not limited to culverts, stormwater drainage pipes, catch basins, drop inlets, junction boxes, headwalls, gutter, swales, channels, ditches, and energy dissipaters shall be provided when necessary for the protection of public right-of-way and private properties adjoining project sites and/or public right-of-ways. Stormwater conveyance facilities that are designed to carry runoff from more that one parcel, existing or proposed, shall meet the following requirements:

(1) Methods to calculate stormwater flows shall be in accordance with the stormwater design manual;

(2) All culverts, pipe systems and open channel flow systems shall be sized in accordance with the stormwater management plan using the methods included in the stormwater design manual; and,

(3) Design and construction of stormwater conveyance facilities shall be in accordance with the criteria and specifications found in the stormwater design manual.

(Ord. No. 200612-1o, § 4.7, 12-5-2006)

Sec. 18-299. Dam design guidelines.

Any land disturbing activity that involves a site which proposes a dam shall comply with the Georgia Safe Dams Act and Rules for Dam Safety as applicable.
(Ord. No. 200612-1o, § 4.8, 12-5-2006)

Secs. 18-300—18-310. Reserved.

DIVISION 4. CONSTRUCTION INSPECTIONS OF POST-DEVELOPMENT STORMWATER MANAGEMENT SYSTEM

Sec. 18-311. Inspections to ensure plan compliance during construction.

Periodic inspections of the stormwater management system construction shall be conducted by the zoning director or any county employee designated by the zoning director or conducted and certified by a professional engineer who has been approved by Jones County. Construction inspections shall utilize the approved stormwater management plan for establishing compliance.

All inspections shall be documented with written reports that contain the following information:

(1) The date and location of the inspection;

(2) Whether construction is in compliance with the approved stormwater management plan;

(3) Variations from the approved construction specifications; and,

(4) Any other variations or violations of the conditions of the approved stormwater management plan.

If any violations are found, the applicant shall be notified in writing of the nature of the violation and the required corrective actions.
(Ord. No. 200612-1o, § 5.1, 12-5-2006)

Sec. 18-312. Final inspection and as built plans.

Upon completion of a project, and before a certificate of occupancy shall be granted, the applicant is responsible for certifying that the completed project is in accordance with the approved stormwater management plan. All applicants are required to submit actual "as built" plans for any stormwater management facilities or practices after final construction is completed. The plan must show the final design specifications for all stormwater management facilities and practices and must be certified by a professional engineer. A final inspection by the zoning director or any county employee designated by the zoning director is required before the release of any performance securities can occur.
(Ord. No. 200612-1o, § 5.2, 12-5-2006)

Secs. 18-313—18-320. Reserved.

DIVISION 5. ONGOING INSPECTION AND MAINTENANCE OF STORMWATER FACILITIES AND PRACTICES

Sec. 18-321. Long-term maintenance inspection of stormwater facilities and practices.

Stormwater management facilities and practices included in a stormwater management plan which are subject to an inspection and maintenance agreement must undergo ongoing inspections to document maintenance and repair needs and ensure compliance with the requirements of the agreement, the plan and this article.

A stormwater management facility or practice shall be inspected on a periodic basis by the responsible person in accordance with the approved inspection and maintenance agreement. In the event that the stormwater management facility has not been maintained and/or becomes a danger to public safety or public health, the zoning director or any county employee designated by the zoning director shall notify the person responsible for carrying out the maintenance plan by registered or certified mail to the person specified in the inspection and maintenance agreement. The notice shall specify the measures needed to comply with the agreement and the plan and shall specify the time within which such measures shall be completed. If the responsible person fails or refuses to meet the requirements of the inspection and maintenance agreement, the zoning director or any county employee designated by the zoning director, may correct the violation as provided in section 18-324 hereof.

Inspection programs by the zoning director or any county employee designated by the zoning director may be established on any reasonable basis, including but not limited to: routine inspections; random inspections; inspections based upon complaints or other notice of possible violations; and joint inspections with other agencies inspecting under environmental or safety laws. Inspections may include, but are not limited to: reviewing maintenance and repair records; sampling discharges, surface water, groundwater, and material or water in stormwater management facilities; and evaluating the condition of stormwater management facilities and practices.

Sec. 18-322. Right-of-entry for inspection.

The terms of the inspection and maintenance agreement shall provide for the zoning director or any county employee designated by the zoning director to enter the property at reasonable times and in a reasonable manner for the purpose of inspection. This includes the right to enter a property when it has a reasonable basis to believe that a violation of this article is occurring or has occurred and to enter when necessary for abatement of a public nuisance or correction of a violation of this article.
(Ord. No. 200612-1o, § 6.2, 12-5-2006)

Sec. 18-323. Records of maintenance activities.

Parties responsible for the operation and maintenance of a stormwater management facility shall provide records of all maintenance and repairs to the zoning director.
(Ord. No. 200612-1o, § 6.3, 12-5-2006)

Sec. 18-324. Failure to maintain.

If a responsible person fails or refuses to meet the requirements of the inspection and maintenance agreement, Jones County, after 30 days' written notice (except, that in the event the violation constitutes an immediate danger to public health or public safety, 24 hours' notice shall be sufficient), may correct a violation of the design standards or maintenance requirements by performing the necessary work to place the facility or practice in proper working

condition. Jones County may assess the owner(s) of the facility for the cost of repair work which shall be a lien on the property, and may be placed on the ad valorum tax bill for such property and collected in the ordinary manner for such taxes.
(Ord. No. 200612-1o, § 6.4, 12-5-2006)

Secs. 18-325—18-340. Reserved.

DIVISION 6. VIOLATIONS, ENFORCEMENT AND PENALTIES

Sec. 18-341. Violation; relief.

Any action or inaction which violates the provisions of this article or the requirements of an approved stormwater management plan or permit, may be subject to the enforcement actions outlined in this section. Any such action or inaction which is continuous with respect to time is deemed to be a public nuisance and may be abated by injunctive or other equitable relief. The imposition of any of the penalties described below shall not prevent such equitable relief.
(Ord. No. 200612-1o, § 7, 12-5-2006)

Sec. 18-342. Notice of violation.

If the zoning director or any county employee designated by the zoning director determines that an applicant or other responsible person has failed to comply with the terms and conditions of a permit, an approved stormwater management plan or the provisions of this article, it shall issue a written notice of violation to such applicant or other responsible person. Where a person is engaged in activity covered by this article without having first secured a permit therefor, the notice of violation shall be served on the owner or the responsible person in charge of the activity being conducted on the site.

The notice of violation shall contain:

(1) The name and address of the owner or the applicant or the responsible person;

(2) The address or other description of the site upon which the violation is occurring;

(3) A statement specifying the nature of the violation;

(4) A description of the remedial measures necessary to bring the action or inaction into compliance with the permit, the stormwater management plan or this article and the date for the completion of such remedial action;

(5) A statement of the penalty or penalties that may be assessed against the person to whom the notice of violation is directed; and,

(6) A statement that the determination of violation may be appealed to the Jones County Board of Appeals and Adjustments by filing a written notice of appeal within 30 days after the notice of violation (except, that in the event the violation constitutes an immediate danger to public health or public safety, 24 hours' notice shall be sufficient).

(Ord. No. 200612-1o, § 6.1, 12-5-2006)

Sec. 18-343. Penalties.

In the event the remedial measures described in the notice of violation have not been completed by the date set forth for such completion in the notice of violation, any one or more of the following actions or penalties may be taken or assessed against the person to whom the notice of violation was directed. Before taking any of the following actions or imposing any of the following penalties, the zoning director or any county employee designated by the zoning director shall first notify the applicant or other responsible person in writing of its intended action, and shall provide a reasonable opportunity, of not less than ten days (except, that in the event the violation constitutes an immediate danger to public health or public safety, 24 hours' notice shall be sufficient) to cure such violation. In the event the applicant or other responsible person fails to cure such violation after such notice and cure period, the zoning director or any county employee designated by the zoning director may take any one or more of the following actions or impose any one or more of the following penalties.

(1) *Stop work order.* The zoning director or any county employee designated by the zoning director may issue a stop work order which shall be served on the applicant or other responsible person. The stop work order shall remain in effect until the applicant or other responsible person has taken the remedial measures set forth in the notice of violation or has otherwise cured the violation or violations described therein, provided the stop work order may be withdrawn or modified to enable the applicant or other responsible person to take the necessary remedial measures to cure such violation or violations.

(2) *Withhold certificate of occupancy.* The zoning director or any county employee designated by the zoning director may refuse to issue a certificate of occupancy for the building or other improvements constructed or being constructed on the site until the applicant or other responsible person has taken the remedial measures set forth in the notice of violation or has otherwise cured the violations described therein.

(3) *Suspension, revocation or modification of permit.* The zoning director or any county employee designated by the zoning director may suspend, revoke or modify the permit authorizing the land development project. A suspended, revoked or modified permit may be reinstated after the applicant or other responsible person has taken the remedial measures set forth in the notice of violation or has otherwise cured the violations described therein, provided such permit may be reinstated [upon such conditions as the zoning director or any county employee designated by the zoning director may deem necessary] to enable the applicant or other responsible person to take the necessary remedial measures to cure such violations.

(4) *Civil penalties.* In the event the applicant or other responsible person fails to take the remedial measures set forth in the notice of violation or otherwise fails to cure the violations described therein within ten days, or such greater period as the zoning director shall deem appropriate (except, that in the event the violation constitutes an immediate danger to public health or public safety, 24 hours' notice shall be sufficient) after the zoning director or any county employee designated by the zoning director has

taken one or more of the actions described above, the zoning director or any county employee designated by the zoning director may impose a penalty not to exceed $1,000.00 (depending on the severity of the violation) for each day the violation remains unremedied after receipt of the notice of violation.

(5) *Criminal penalties.* For intentional and flagrant violations of this article, the zoning director or any county employee designated by the zoning director may issue a citation to the applicant or other responsible person, requiring such person to appear in superior court to answer charges for such violation. Upon conviction, such person shall be punished by a fine not to exceed $1,000.00 or imprisonment for 60 days or both. Each act of violation and each day upon which any violation shall occur shall constitute a separate offense.

(Ord. No. 200612-1o, § 7.2, 12-5-2006)

Secs. 18-344—18-375. Reserved.

ARTICLE VIII. MINIMUM HEALTH AND SAFETY STANDARDS FOR PRE-OWNED MANUFACTURERED HOMES

Sec. 18-376. Definitions.

The following words, terms, or phrases, when used in this article, shall have the meanings ascribed to them in this section:

Applicant means any person seeking to install a pre-owned manufactured home in the unincorporated area of Jones County.

Building inspector means the person appointed, employed, or otherwise designated as the director of planning, permits and inspections; the county building official or any of his or her assistants.

Certificate of occupancy means a document issued by the building inspector certifying that a pre-owned manufactured home is in compliance with applicable requirements set forth by this article, and indicating it to be in a condition suitable for residential occupancy.

Guarantee of condition bond means a surety bond to guarantee that the affidavit and photographs required by paragraphs (1) and (2) of subsection (a) of section 18-378 of this article reasonably portray or represents the existing condition of the pre-owned manufactured home proposed for relocation. In lieu of the bond, a cash deposit may be deposited with the county.

Install means to construct a foundation system and to place or erect a manufactured home on such foundation system. Such term includes, without limitation, supporting, blocking, leveling, securing, or anchoring such manufactured home and connecting multiple or expandable sections of such manufactured home.

Jurisdiction means the unincorporated areas within Jones County, Georgia.

Manufactured home means a structure, transportable in one or more sections, which, in the traveling mode, is eight body feet or more in width or 40 body feet or more in length or, when erected on-site, is 320 or more square feet and which is built on a permanent chassis and designed to be used as a dwelling with or without a permanent foundation when connected to the required utilities and includes the plumbing, heating, air-conditioning, and electrical systems contained therein; except that such term shall include any structure which meets all the requirements of this paragraph except the size requirements and with respect to which the manufacturer voluntarily files a certification required by the secretary of housing and urban development and complies with the standards established under the National Manufactured Housing Construction and Safety Standards Act of 1974, 42 U.S.C. Section 5401, et seq.

Pre-owned manufactured home means any manufactured home that has been previously used as a residential dwelling and has been titled.
(Ord. No. 201106-1o, § 8-20, 6-21-2011)

Sec. 18-377. Conditions.

All pre-owned manufactured homes located in the jurisdiction shall bear a label certifying it was constructed in compliance with the National Manufactured Housing Construction and Safety Standards Act of 1974, 42 U.S.C. Section 5401, et seq. (the HUD Code) and shall be installed in accordance with O.C.G.A. § 8-2-160, et seq.
(Ord. No. 201106-1o, § 8-21, 6-21-2011)

Sec. 18-378. Permitting, inspection, certificate of occupancy and fees.

A permit shall be required to locate a pre-owned manufactured home in the jurisdiction.

(a) *Permit.* To obtain a permit, applicants shall provide to the building inspector:

(1) An affidavit signed by the applicant that the pre-owned manufactured home meets health and safety standards required by this act;

(2) Photographs of the interior and exterior of the pre-owned manufactured home providing evidence that home meets the minimum health and safety standards of section 18-379 of this article;

(3) A $750.00 refundable guarantee of condition bond or $750.00 refundable cash deposit; and

(4) The permit and inspection fee required by subsection (d) of this section.

(b) *Inspection.* Upon receipt of a permit, applicants may relocate the manufactured home on a residential site for the purposes of inspection. Applicant shall arrange for an inspection to be held once the installation of the manufactured home is complete.

(c) *Certificate of occupancy.* A certificate of occupancy shall be issued to the applicant at such time that the building inspector certifies that the requirements of this article have been met.

(d) *Fee.* A permit and inspection fee of $0.30 times the square footage of the manufactured home shall be charged to the applicant to cover the cost to the county to process the permit application and inspect the pre-owned manufactured home. Such fee shall cover the initial inspection and one followup inspection. The applicant shall be charged an additional inspection fee of $0.15 times the square footage of the manufactured home for each additional followup inspection that may be necessary.

(e) *Alternative inspection.* At the request of the applicant, the building inspector may, at his or her discretion, inspect a pre-owned manufactured home prior to its being relocated if the home is then located at another site within the county.

(Ord. No. 201106-1o, § 8-22, 6-21-2011)

Sec. 18-379. Minimum health and safety standards.

All pre-owned manufactured homes shall comply with the following before being issued a certificate of occupancy by the building inspector:

(a) *HUD Code.* Every pre-owned manufactured home located in the jurisdiction shall be in compliance with the Federal Manufactured Housing Construction and Safety Standards Act, 42 U.S.C. 5401-5445 (the HUD Code) and shall not have been altered in such a way that the home no longer meets the HUD Code.

(b) *Interior condition.* Every floor, interior wall, and ceiling of a pre-owned manufactured home shall be in sound condition. Doors and windows shall be operable, watertight and in good working condition. The floor system shall be in sound condition and free of warping, holes, water damage, or deterioration.

(c) *Exterior condition.* The exterior of all pre-owned manufactured homes shall be free of loose or rotting boards or timbers and any other conditions that might admit rain or moisture to the interior portions of the walls or to occupied spaces. The exterior siding shall be free of rot and rust. Roofs shall be structurally sound and have no obvious defects that might admit rain or cause moisture to collect on the interior portion of the home.

(d) *Sanitary facilities.* Every plumbing fixture, water, and waste pipe of a pre-owned manufactured home shall be in a sanitary working condition when properly connected, and shall be free from leaks and obstructions. Each home shall contain a kitchen sink. Each bathroom shall contain a lavatory and water closet. At least one bathroom shall contain a tub and/or shower facilities. Each of these fixtures shall be checked upon being connected to ensure they are in good working condition.

(e) *Heating systems.* Heating shall be safe and in working condition. Unvented heaters shall be prohibited.

(f) *Electrical systems (switches, receptacles, fixtures, etc.)* shall be properly installed and wired and shall be in working condition. Distribution panels shall be in compliance with the approved listing, complete with required breakers, with all unused openings covered with solid covers approved and listed for that purpose. The home shall be

subject to an electrical continuity test to assure that all metallic parts are properly bonded. Each pre-owned manufactured home shall contain a water heater in safe and working order.

(g) *Hot water supply.* Each home shall contain a water heater in safe and working condition.

(h) *Egress windows.* Each bedroom of a manufactured home shall have at least one operable window of sufficient size to allow egress if necessary.

(i) *Ventilation.* The kitchen in the home shall have at least one operating window or other ventilation device.

(j) *Smoke detectors.* Each pre-owned manufactured home shall contain one operable battery-powered smoke detector in each bedroom and in the kitchen, which must be installed in accordance with the manufacturer's recommendations.

(Ord. No. 201106-1o, § 8-23, 6-21-2011)

Sec. 18-380. Enforcement.

(a) Permanent connection to utilities shall not be approved until the building inspector has issued a certificate of occupancy.

(b) Owners of pre-owned manufactured homes that are not in compliance upon a third inspection shall have their permit revoked and shall be required to remove the home from the jurisdiction at their own expense.

(c) The guarantee of condition bond or cash deposit will be forfeited after 90 days from the date of inspection, unless all conditions and standards are met prior to the end of the 90 days or an extension has been issued in writing by the building inspector.

(Ord. No. 201106-1o, § 8-24, 6-21-2011)

Sec. 18-381. Penalties

Failure to remove a pre-owned manufactured home from the jurisdiction upon failure to receive a certificate of occupancy shall be punishable by a fine of $500.00. Each day any violation under this ordinance continues shall be considered a separate offense.

(Ord. No. 201106-1o, § 8-25, 6-21-2011)

Chapters 19—21

RESERVED

Chapter 22

BUSINESSES AND BUSINESS REGULATIONS*

Article I. In General

Secs. 22-1—22-30. Reserved.

Article II. Pawnbrokers

Division 1. Generally

Sec. 22-31. Definitions.
Sec. 22-32. Daily report.
Sec. 22-33. Inspections.
Secs. 22-34—22-50. Reserved.

Division 2. License

Sec. 22-51. Required.
Sec. 22-52. Applicability of article.
Sec. 22-53. Fee.
Sec. 22-54. Duration, renewal.
Sec. 22-55. Transfer.
Sec. 22-56. Revocation.
Secs. 22-57—22-60. Reserved.

Article III. Occupation Taxes and Regulatory Fees

Sec. 22-61. Definitions.
Sec. 22-62. Administrative fee.
Sec. 22-63. Occupation tax levied; limitations.
Sec. 22-64. Occupation tax certificate.
Sec. 22-65. Reserved.
Sec. 22-66. Exemptions.
Sec. 22-67. Evidence of state registration when required.
Sec. 22-68. Evidence of qualification required if applicable.
Sec. 22-69. Filing returns; other information required or requested.
Sec. 22-70. Confidentiality.
Sec. 22-71. Date due; penalty.
Sec. 22-72. Enforcement; violations.
Sec. 22-73. Transfer of occupation tax certificate to a new owner.

***Cross references—**Alcoholic beverages, ch. 6; amusements and entertainments, ch. 10; emergency services, ch. 30; taxation, ch. 66; water and sewers, ch. 74; commercial districts, app. A, § 73; home occupations, app. A, § 95; automobile service stations, app. A, § 96; adult entertainment establishments, app. A, § 99.

State law references—Limitation on expanding the power of municipal regulation over any business activity regulated by the Public Service Commission, O.C.G.A. § 36-35-6(5); business and occupation taxes, O.C.G.A. § 48-13-1 et seq.

Sec. 22-74. Transfer of occupation tax certificate to a new location.
Sec. 22-75. Public hearing.
Sec. 22-76. Prior ordinance.
Sec. 22-77. Effective date.

ARTICLE I. IN GENERAL

Secs. 22-1—22-30. Reserved.

ARTICLE II. PAWNBROKERS

DIVISION 1. GENERALLY

Sec. 22-31. Definitions.

The following words, terms and phrases, when used in this article, shall have the meanings ascribed to them in this section, except where the context clearly indicates a different meaning:

Pawnbroker means one who lends money on personal property, taking possession of such personal property and holding it as a pledge or pawn for the security of a loan; and any person who purchases jewelry, guns, pistols, household effects, or other articles of merchandise or personal property, and at the time thereof gives the seller the privilege of redeeming the same thereafter. The term "pawnbroker" shall also include those engaged in the business of lending money on automobile titles, commonly known as a title pawn business.
(Ord. of 11-18-1986; Ord. of 1-7-1997)

Cross reference—Definitions generally, § 1-4.

Sec. 22-32. Daily report.

Each pawnbroker in the county shall make a report to the sheriff before 10:00 a.m. each day (except Sunday, when the transactions of Saturday shall be made on the following business day) of every article or thing pawned to or purchased by him or them, whether such purchase be unconditional or with the privilege of redeeming on the part of the seller, on the day and night previous. Such report shall specify the article or thing, giving a full description thereof, such as number, mark, and all other details as will make identification of such article or thing clear and positive.
(Ord. of 11-18-1986)

Sec. 22-33. Inspections.

Each pawnbroker shall hold his place of business subject to inspections by the sheriff. On refusal of any pawnbroker at any time to submit to such inspections, his shop shall be immediately closed by the board of commissioners.
(Ord. of 11-18-1986)

Secs. 22-34—22-50. Reserved.

DIVISION 2. LICENSE

Sec. 22-51. Required.

It shall be unlawful for any person to engage in business in the county as a pawnbroker without first obtaining a license to do so.
(Ord. of 11-18-1986)

Sec. 22-52. Applicability of article.

All licenses for pawnbrokers shall be subject to the provisions of this article.
(Ord. of 11-18-1986)

Sec. 22-53. Fee.

The fee for a license required by this division shall be as set forth in the schedule of fees and charges on file in the office of the county clerk.
(Ord. of 11-18-1986; Ord. of 4-20-1989)

Sec. 22-54. Duration, renewal.

Each license issued under this division shall be valid from July 1 through June 30, and may be renewed on an annual basis.
(Ord. of 11-18-1986)

Sec. 22-55. Transfer.

No license issued under this division may be transferred from the person to whom it was issued.
(Ord. of 11-18-1986)

Sec. 22-56. Revocation.

In addition to the penalties provided in section 1-19 of this Code, any license issued under this division may be revoked for the violation of any provision of this article.
(Ord. of 11-18-1986)

ARTICLE III. OCCUPATION TAXES AND REGULATORY FEES

Sec. 22-61. Definitions.

The following words, terms and phrases, when used in this article, shall have the meanings ascribed to them in this section, except where the context clearly indicates a different meaning:

Administrative fee means the component of the occupation tax which approximates the reasonable cost of handling and processing the occupation tax.

Employee means an individual whose work is performed under the direction and supervision of the employer and whose employer withholds FICA, federal income tax, or state income tax from such individual's compensation, or whose employer issues to such individual for purposes of documenting compensation a form IRS W-2, but not a form IRS 1099.

Location or *office* means a fixed place located within the county from which a person conducts business, but shall not include a work site located in the county for less than six months for the purpose of serving a single customer or project.

Occupation tax means a tax levied for revenue purposes on persons, partnerships, corporations or other entities for engaging in an occupation, profession or business in the county.

Occupation tax certificate means a document issued by the county acknowledging payment of the occupation tax and administrative fee.

Practitioners of professions and occupations means those individuals listed in O.C.G.A. § 48-13-9(c), 1—22 but does not include a practitioner who is an employee of a business if such business pays an occupation tax.
(Ord. No. 2009-07-07, 7-7-2009; Ord. No. 2010-09, 9-21-2010)

Sec. 22-62. Administrative fee.

A nonprorated, nonrefundable administrative fee of $25.00 is required on all occupation tax accounts for the initial registration, annual renewal or reopening of such accounts.
(Ord. No. 2009-07-07, 7-7-2009; Ord. No. 2010-09, 9-21-2010)

Sec. 22-63. Occupation tax levied; limitations.

(a) An occupation tax of $100.00 is levied upon businesses and practitioners of professions and occupations with one or more locations or offices within the unincorporated areas of the county and, pursuant to O.C.G.A. § 48-13-7, upon out-of-state businesses with no location or office in the county but with employees or agents engaging in substantial efforts to solicit business or serve customers or clients in the county.

(b) The county shall not require the payment of more than one occupation tax for each location of a business or practitioner.

(c) A business or practitioner which is subject to an occupation tax by another local government and claiming an exemption from or limitation to the occupation tax imposed by this article shall submit documentation as to current payment of the occupation tax to the other local government and the basis of such tax.

(1) If a business or practitioner with no location or office in the state provides to the county proof of payment of a local business or occupation tax in another state which purports to tax the business's or practitioner's sales or services in this state, the business or practitioner shall be exempt from this occupation tax.

(2) A business or practitioner with no location or office in the state shall only be required to pay occupation tax to the local government in the state where the largest dollar volume of business is done or service is performed by such business or practitioner. This limitation shall only apply when the business or practitioner has provided to the county satisfactory proof as to the applicability of this subsection.

(3) If an employee works for the same business or practitioner in more than one municipal corporation or county and the business or practitioner submits proof of this, the employee shall be counted as an employee in the county only if the county is the jurisdiction where such employee works for the longest period of time within the calendar year.

(d) The full amount of the occupation tax will be charged if a business begins operation between June 1 and November 30. Fifty percent of the occupation tax will be charged if a business begins operation between December 1 and May 31.

(e) Real estate brokers shall be subject to occupation tax pursuant to this article only if they maintain a principal or branch office in the county.

(Ord. No. 2009-07-07, 7-7-2009; Ord. No. 2010-09, 9-21-2010)

Sec. 22-64. Occupation tax certificate.

Every business, practitioner and location subject to payment of the occupation tax levied by this article shall display a current occupation tax certificate in a conspicuous place at the location for which such certificate was issued. If the taxpayer does not have a permanent location within the county, the occupation tax certificate shall be shown to any county representative upon request.

(Ord. No. 2009-07-07, 7-7-2009; Ord. No. 2010-09, 9-21-2010)

Sec. 22-65. Reserved.

Sec. 22-66. Exemptions.

(a) No occupation tax shall be levied on the following:

(1) Any practitioner whose office is maintained by and who is employed in practice exclusively by the United States, the state, a municipality or county of the state, or instrumentality of the United States, the state or a municipality or county of the state;

(2) Those businesses regulated by the state public service commission;

(3) Those electrical service businesses organized under O.C.G.A. tit. 46, ch 3;

(4) Any farm operation for the production from or on the land of agricultural products, but not including any agribusiness;

(5) Nonprofit, agricultural product cooperative marketing associations pursuant to O.C.G.A. § 2-10-105;

(6) Motor common carriers pursuant to O.C.G.A. § 46-7-15;

(7) Persons purchasing guano, meats, meal, flour, bran, cottonseed, or cottonseed meal or hulls in carload lots for distribution among the purchasers for use and not sale pursuant to O.C.G.A. § 48-5-355;

(8) Pursuant to O.C.G.A. § 48-5-356 for persons selling or introducing into the county agricultural products or livestock, including animal products, raised in this state when the sale and introductions are made by the producer of the product and the sale is made within 90 days of the introduction of the product into the county;

(9) Depository institutions pursuant to O.C.G.A. § 48-6-93;

(10) Any business where the levy of such occupation tax is prohibited by the laws of the state or the United States;

(11) Persons possessing the exemption specified by O.C.G.A. § 43-12-1; or

(12) Reserved;

(13) Any business that conducts business less than eight calendar days a year within Jones County.

(b) The exemptions and limitations contained in this article shall not be construed to repeal or otherwise affect in any way any franchise fees, business taxes or other fees or taxes otherwise allowed by law.
(Ord. No. 2009-07-07, 7-7-2009; Ord. No. 2010-09, 9-21-2010)

Sec. 22-67. Evidence of state registration when required.

Each person who is licensed under O.C.G.A. title 43 by the examining boards of the Secretary of State's office shall provide evidence of proper and current state licensure before any county occupation tax certificate may be issued.
(Ord. No. 2009-07-07, 7-7-2009; Ord. No. 2010-09, 9-21-2010)

Sec. 22-68. Evidence of qualification required if applicable.

(a) Any business required to obtain health permits, bonds, certificates of qualification, certificates of competency, certificates of inspection, or any other regulatory matter shall first, before the issuance of an occupation tax certificate, show evidence of such qualification. This shall specifically include, but shall not be limited to, proof that all annual inspection fees have been paid to the Jones County Board of Health.

(b) Any business required to submit an annual application for continuance of the business shall do so before the registration is issued.

(c) At the time of the initial payment of the occupation tax charged pursuant to this article, an applicant must present a zoning compliance or home occupation permit.

(d) Any business required to obtain an occupation tax certificate in accordance with this article must present proof of payment of inventory and equipment ad valorem taxes or an exemption form from the Jones County Tax Assessor.
(Ord. No. 2009-07-07, 7-7-2009; Ord. No. 2010-09, 9-21-2010; Ord. No. 2013-001, 8-6-2013)

Sec. 22-69. Filing returns; other information required or requested.

(a) On or before June 1 of each year, an individual, business or practitioner subject to this article shall file with the zoning director on a form approved by and available from the county.

(b) Individuals, businesses and practitioners doing business in the county shall submit to the zoning director or make available within 30 days such information as may be required or requested by the county to determine the applicability of the occupation tax.
(Ord. No. 2009-07-07, 7-7-2009; Ord. No. 2010-09, 9-21-2010)

Sec. 22-70. Confidentiality.

Information provided by a business or practitioner to the county for the purpose of determining the applicability and amount of the occupation tax or levying or collecting the occupation tax is confidential and exempt from disclosure under O.C.G.A. § 50-18-70 et seq. Such information may be provided to the governing authority of another local government for occupation tax purposes or pursuant to court order or for the purpose of collecting occupation tax or prosecution for failure or refusal to pay occupation tax.
(Ord. No. 2009-07-07, 7-7-2009; Ord. No. 2010-09, 9-21-2010)

Sec. 22-71. Date due; penalty.

(a) Any occupation tax due pursuant to this article shall be due and payable annually on June 1. If any person commences business or initially engages in a regulated activity in the county after June 1 in any year, the tax and/or fee shall be due and payable on the date of the commencement of the business or regulated activity.

(b) Effective September 1, 2009, any individual, business or practitioner subject to any occupation tax imposed by this article which is unpaid for ten days after the date on which payment was due shall be subject to a penalty of 100 percent of the occupation tax. The late fee may be waived no more than one time for a specific business at the discretion of the zoning director.
(Ord. No. 2009-07-07, 7-7-2009; Ord. No. 2010-09, 9-21-2010)

Sec. 22-72. Enforcement; violations.

It is the duty of the zoning director or his designee to administer and enforce the provisions of this article, to perform all functions necessary to administer and enforce this article, and to

summon violators of this article to appear before the magistrate court. The zoning director may issue executions against individuals, businesses and practitioners for taxes and fees which are due and owing.

(a) Individuals, businesses and practitioners who fail or refuse to pay any occupation tax charged pursuant to this article shall be subject to a fine not to exceed a maximum of ten times the amount of tax that was required by the business under this article.

(b) All persons subject to the occupation tax imposed by this article shall be required to file for and pay such tax or fee. For failure to do so, any officers or agents soliciting for or obtaining for such person business shall be subject to the same penalty as other persons, businesses or practitioners who fail to obtain or make a return for or pay the applicable occupation tax.

(Ord. No. 2009-07-07, 7-7-2009; Ord. No. 2010-09, 9-21-2010)

Sec. 22-73. Transfer of occupation tax certificate to a new owner.

An occupation tax certificate may be transferred or assigned to a new operator provided the person conducts the business for which the license was issued at the same place and pays the administrative fee specified in section 22-62 of this article.

(Ord. No. 2009-07-07, 7-7-2009; Ord. No. 2010-09, 9-21-2010)

Sec. 22-74. Transfer of occupation tax certificate to a new location.

The owner of an existing business may transfer an occupation tax certificate to a new location provided the owner pays the administrative fee specified in section 22-62 of this article.

(Ord. No. 2009-07-07, 7-7-2009; Ord. No. 2010-09, 9-21-2010)

Sec. 22-75. Public hearing.

The county shall conduct at least one public hearing before adopting any ordinance or resolution which will increase the occupation tax rate specified in section 22-63.

(Ord. No. 2009-07-07, 7-7-2009; Ord. No. 2010-09, 9-21-2010)

Sec. 22-76. Prior ordinance.

To the extent that any occupation taxes or regulatory fees are owed pursuant to an ordinance passed prior to this article, such amounts remain due and owing; and the provisions of that prior ordinance will remain in effect with respect to such unpaid occupation taxes until such time as they are paid in full.

(Ord. No. 2009-07-07, 7-7-2009; Ord. No. 2010-09, 9-21-2010)

Sec. 22-77. Effective date.

This article shall take effect and be in force from and after October 1, 2010.

(Ord. No. 2009-07-07, 7-7-2009; Ord. No. 2010-09, 9-21-2010)

Chapters 23—25

RESERVED

Chapter 26

CIVIL EMERGENCIES*

Article I. In General

Sec. 26-1. Curfews during times of emergency or disaster.
Sec. 26-2. Suspension of portions of the Code of Ordinances and other formalities during a state of emergency.
Sec. 26-3. Overcharging for goods, materials, services, and housing during a state of emergency; prohibited.
Secs. 26-4—26-30. Reserved.

Article II. Emergency Management

Division 1. Generally

Sec. 26-31. Definitions.
Sec. 26-32. Unlawful acts during emergencies.
Secs. 26-33—26-50. Reserved.

Division 2. Emergency Authority

Sec. 26-51. Conditions authorizing declaration of emergency.
Sec. 26-52. Powers after declaration.
Sec. 26-53. Effective period of emergency powers.
Sec. 26-54. Duration.
Sec. 26-55. Specified area.
Secs. 26-56—26-70. Reserved.

Division 3. Emergency Management Agency

Sec. 26-71. Participation.
Sec. 26-72. Director.
Sec. 26-73. Duties, generally.
Sec. 26-74. Powers during an emergency or disaster.
Sec. 26-75. Volunteers.
Sec. 26-76. Penalties.
Sec. 26-77. Local emergency management powers.
Sec. 26-78. Financial assistance.
Sec. 26-79. Immunity of state and political subdivisions.
Sec. 26-80. Local emergency management agency plan.
Secs. 26-81—26-125. Reserved.

***Cross references—**Administration, ch. 2; emergency services, ch. 30; fire prevention and protection, ch. 38.

State law references—Georgia Emergency Management Act of 1981, O.C.G.A. § 38-3-1 et seq.; Interstate Civil Defense and Disaster Compact, O.C.G.A. § 38-3-70 et seq.

Article III. Registration of Building and Repair Services During a State of Emergency

Sec. 26-126. Building contractor registration required.
Sec. 26-127. Definitions.
Sec. 26-128. Registration; certification.
Sec. 26-129. Registration fees.
Sec. 26-130. Penalties.
Sec. 26-131. Transferability.
Sec. 26-132. Display of registration certification.
Sec. 26-133. Revocation; suspension.
Sec. 26-134. Severability.
Sec. 26-135. Exemptions.
Sec. 26-136. Effective date; expiration.

ARTICLE I. IN GENERAL

Sec. 26-1. Curfews during times of emergency or disaster.

(a) *Institution of curfew.*

(1) Upon the declaration of a state of emergency by the governor, or upon the determination by the county governing authority, or its designee, of the existence of an emergency or disaster, the county governing authority, its designee or the emergency interim successor may adopt a resolution instituting a curfew when it is determined necessary to protect and safeguard the people and property of Jones County.

(2) All of the territory of the unincorporated county shall be subject to the terms of the curfew, unless otherwise specified in the resolution.

(3) The resolution instituting the curfew shall include the dates and hours that the curfew shall be in effect.

(b) *Definitions.*

(1) *Curfew.* A "curfew" is a regulation requiring the withdrawal from any person not otherwise exempt from this ordinance from appearing in certain public areas during specified hours.

(2) *Exempt individuals.* Unless otherwise specified in the resolution implementing the curfew, 'exempt individuals' include those individuals engaged in the provision of designated, essential services, such as fire, rescue, law enforcement, emergency medical services and hospital services, military services, utility emergency repairs, or others that may be deemed necessary by the EMA director. The resolution may, in the discretion of the governing authority, also exempt regular employees of local industries traveling to and from their jobs with appropriate identification, news media employees, building and repair contractors, properly registered according to Jones County Ordinance No. [of September 19, 2006] ("Ordinance to Require Registration and Licensing of Building and Repair Services During a State of Emergency"), performing activities related to construction, repair, renovation or improvement of buildings and other structures damaged during the disaster or emergency. [Said ordinance is set out as article III of this chapter.]

(3) *State of emergency.* As defined by O.C.G.A. § 38-3-3(5), a condition declared by the governor when, in his judgment, the threat or actual occurrence of a disaster, emergency, or energy emergency is of sufficient severity and magnitude as to warrant extraordinary efforts in preventing or alleviating the damage, loss, hardship, or suffering threatened or caused thereby.

(c) *Prohibition.* It shall be prohibited for any person, other than exempt individuals, to appear in public in the territory subject to the curfew, including but not limited to, streets, highways, alleys, sidewalks, vacant lots, parks, public buildings or any other public places in all or a delineated part of unincorporated Jones County during the stated hours of the curfew.

(d) *Penalties.* Any individual violating this ordinance, upon conviction, shall be punishable by a fine not to exceed $1,000.00 per violation or imprisonment not to exceed 60 days, or both. (Ord. No. 200609-1o, §§ 1—4, 9-19-2006)

Sec. 26-2. Suspension of portions of the Code of Ordinances and other formalities during a state of emergency.

(a) *Authority to waive procedures and fee structures.*

(1) *Meetings.* Upon proclamation by the appropriate state official of an emergency or disaster of manmade or natural causes or enemy attack impending on or affecting, Jones County Georgia, the affairs and business of Jones County may be conducted at places other than the regular or usual place thereof, within or outside of Jones County, when it is not prudent, expedient or possible to conduct business at the regular location. When such meetings occur outside of Jones County, all actions taken by the local governing body shall be as valid and binding as if performed within Jones County. Such meetings may be called by the presiding officer or any three members of the governing body without regard to or compliance with time consuming procedures and formalities otherwise required by law.

(2) *Purchasing and public works contracts.* Upon the declaration of a state of emergency by the governor, or upon the determination by the county governing authority, or its designee, of the existence of an emergency or disaster, the county governing authority, their designee or the emergency interim successor may contract for public works without letting such contract out to the lowest responsible bidder and without advertising and posting notification of such contract; provided, however, that any public works contract entered into pursuant to this subsection shall be entered on the minutes of the county as soon as practical and the nature of the emergency described therein.

(3) *Code enforcement.* Upon the declaration of a state of emergency by the governor, or upon the determination by the county governing authority, or its designee, of the existence of an emergency or disaster, the county governing authority, their designee or the emergency interim successor may temporarily suspend the enforcement of the Code of Ordinances of Jones County, or any portion thereof, where: (a) the emergency or disaster is of such nature that immediate action outside the Code is required; (b) such suspension is consistent with the protection of the public health, safety and welfare; and (c) such suspension is not inconsistent with any federal or state statutes or regulations.

(4) *Fees.* Upon the declaration of a state of emergency by the governor, or upon the determination by the county governing authority, or its designee, of the existence of an emergency or disaster, the county governing authority, their designee or the emergency interim successor may temporarily reduce or suspend any permit fees, application fees or other rate structures as necessary to encourage the rebuilding of the area impacted by the disaster or emergency.

(5) *Temporary dwellings.* Upon the declaration of a state of emergency by the governor, or upon the determination by the county governing authority, or its designee or the emergency interim successor may issue temporary mobile home, trailer, recreational vehicle or other temporary dwelling structures or parks in any zoning district while the primary dwelling is being repaired provided that such temporary dwellings or parks are designed by an engineer and the plans approved by the county health department and county planning and zoning department. The temporary permit shall not exceed six months in duration. In the case of continuing hardship and in the discretion of the governing authority or its designee, the permit may be extended for a period for an additional six months. Upon expiration of the temporary permit or an extension, the temporary dwelling shall be removed.

(b) *Definitions.*

Fees. Any fee or rate charged by the county for building permits, land disturbance permits, zoning applications, special land use permits, temporary land use permits, and other fees relating to the reconstruction, repair and clean up of areas impacted by the disaster or emergency. "Fees" shall not include those fees collected by the county on behalf of the federal or state government or those fees charged by the county pursuant to a federal or state statute or regulation.

State of emergency. As defined by O.C.G.A. § 38-3-3(5), a condition declared by the governor when, in his judgment, the threat or actual occurrence of a disaster, emergency, or energy emergency is of sufficient severity and magnitude as to warrant extraordinary efforts in preventing or alleviating the damage, loss, hardship, or suffering threatened or caused thereby.

Subsequent recovery period. The period of time that the disaster or emergency continues to cause disruptions in the area impacted by the disaster or emergency. The "subsequent recovery period" shall not exceed six months after the state of emergency declaration by the governor is terminated unless extended by official action of the governing authority of Jones County.

Temporary dwelling. Any mobile or easily movable home, trailer, recreational vehicle or structure not otherwise permitted by the zoning regulations in a particular zoning district.
(Ord. No. 200609-2o, §§ 1, 2, 9-19-2006)

Sec. 26-3. Overcharging for goods, materials, services, and housing during a state of emergency; prohibited.

(a) *Overcharging prohibited.* In order to preserve, protect, or sustain the life, health, or safety of persons or their property, it shall be unlawful during the duration of a state of emergency or subsequent recovery period in which Jones County has been designated as a disaster area, for any person, firm or corporation located or doing business in Jones County to overcharge for any goods, materials, services or housing sold within the county.

(b) *Definitions.*

(1) *Overcharging.* The term "overcharging" is defined as charging prices for goods, materials, services, or housing which are substantially in excess of the customary charges or in applicable cases substantially in excess of the supplier's or provider's costs for such goods, materials, services, or housing. The existence of overcharging shall be presumed from a substantial increase in the price at which the goods, materials, services, or housing was offered in the usual course of business immediately prior to the onset of the emergency, but shall not include increases in costs to the supplier directly attributable to higher costs of materials, supplies, and labor costs resulting from the emergency.

(2) *State of emergency.* The term "state of emergency" is defined pursuant to O.C.G.A. § 38-3-3 (5), as a condition declared by the governor when, in his judgment, the threat or actual occurrence of a disaster or emergency is of sufficient severity and magnitude as to warrant extraordinary efforts in preventing or alleviating the damage, loss, hardship, or suffering threatened or caused thereby.

(3) *Subsequent recovery period.* The term 'subsequent recovery period' is defined as that period during which the disaster continues to cause disruptions in the disaster area, but shall not exceed six months after the emergency declaration has been terminated by the governor unless extended by official action of the governing authority of Jones County.

(c) *Penalties.* Violation of the provisions of this ordinance upon conviction shall be punishable by a fine not to exceed $1,000.00 per violation or imprisonment not to exceed 60 days, or both fine and imprisonment. Each sale shall constitute a separate offense.

(d) *Severability.* If any section, paragraph, sentence, clause, phrase or word of this article is for any reason held by the court to be unconstitutional, inoperative, or void, such holding shall not the remainder of the article.

(e) *Effective date.* This article shall take effect on the date of its being duly adopted but shall be operative only during the period of a declared state of emergency and any subsequent recovery periods.
(Ord. No. 200609-4o, §§ 1—5, 9-19-2006)

Secs. 26-4—26-30. Reserved.

ARTICLE II. EMERGENCY MANAGEMENT

DIVISION 1. GENERALLY

Sec. 26-31. Definitions.

The following words, terms and phrases, when used in this article, shall have the meanings ascribed to them in this section, except where the context clearly indicates a different meaning:

Emergency management means the preparation for the carrying out of all emergency functions, other than functions for which military forces are primarily responsible; to prevent,

minimize and repair injury and damage resulting from emergencies, energy emergencies, disasters or their imminent threat, of manmade or natural origin caused by enemy attack, sabotage, civil disturbance, fire, flood, earthquake, wind, storm, wave action, oil spill or other water contamination requiring emergency action to avert danger or damage, epidemic, air contamination, blight, drought, infestation, explosion, riot or other hostile action, or other causes. These functions include, without limitation:

(1) Firefighting services;

(2) Police services;

(3) Medical and health services;

(4) Rescue;

(5) Engineering;

(6) Warning services;

(7) Communications;

(8) Defense from radiological, chemical and other special weapons;

(9) Evacuation of persons from stricken areas;

(10) Emergency welfare services;

(11) Emergency transportation;

(12) Plant protection;

(13) Temporary restoration of public utility services; and

(14) Other functions related to civilian protection; together with all other activities necessary or incidental to the preparation for and carrying out of these functions.

(Res. of 8-8-2001, § I)

Cross reference—Definitions generally, § 1-4.

Sec. 26-32. Unlawful acts during emergencies.

It shall be unlawful for any person to commit any of the following acts during an emergency:

(1) Willfully obstruct, hinder or delay any member of the emergency management agency in the enforcement of any lawful rule or regulation issued pursuant to this article or in the performance of any duty imposed by virtue of this article.

(2) Do any act forbidden by any lawful rules or regulations issued pursuant to this article if such act is of such a nature as to give assistance to the enemy; imperil the life or property of any inhabitant of this county; or prevent, hinder or delay the defense or protection of the county.

(3) Wear, carry or display without authority any mark or identification specified by the emergency management agency.

Secs. 26-33—26-50. Reserved.

DIVISION 2. EMERGENCY AUTHORITY

Sec. 26-51. Conditions authorizing declaration of emergency.

The chairman shall have the right to declare an emergency to exist when, in his opinion, one or more of the following conditions exist:

(1) There is extreme likelihood of danger of destruction of life or property due to unusual conditions.

(2) Unusual or extreme weather conditions, making use of county roads or highways difficult or impossible.

(3) Civil unrest, commotion or uprising is imminent or exists.

(4) There is a stoppage or loss of electrical power or natural gas service affecting a major portion of the county.

Sec. 26-52. Powers after declaration.

After declaration of an emergency under section 26-51, the chairman, as chief executive, shall have the right to exercise any or all of the following powers:

(1) Use employees of the county to assist in the safety and preservation of life, limb and property of its citizenry.

(2) Close roads and highways and delineate areas within the county wherein an emergency exists.

(3) Impose emergency curfew regulations.

(4) Close business establishments within the affected area.

(5) Close any or all county-owned buildings and other facilities to the use of the general public.

(6) Do all acts necessary and incidental to the preservation of life, limb and property of the citizenry of the county.

Sec. 26-53. Effective period of emergency powers.

No emergency power as set forth in section 26-52 may be effective for more than 72 hours after the declaration of an emergency by the chairman. However, upon declaration of a second or further emergencies to exist, the emergency powers as set forth in such section may be exercised during such further emergency period, but never for more than 72 hours in one declared emergency period.

Sec. 26-54. Duration.

No emergency period shall extend beyond the next regular, special or called meeting of the board of commissioners.

Sec. 26-55. Specified area.

The declaration of an emergency as to a portion of the county shall specify with exactness the area in which the emergency is declared to exist.

Secs. 26-56—26-70. Reserved.

DIVISION 3. EMERGENCY MANAGEMENT AGENCY

Sec. 26-71. Participation.

In cases where a county has an organization for emergency management, such organization shall include participation by each city within the county unless the governing authority of any particular city elects to implement its own organization for emergency management. Any two or more of such political subdivisions may, with the approval of the state director, contract with each other so as to form one emergency management organization for the entire area included in the bounds of the contracting political subdivisions.
(Res. of 8-8-2001, § II)

Sec. 26-72. Director.

The chairman of the board of commissioners is authorized to nominate a local director to the state director of emergency management who shall have the authority to make the appointment.
(Res. of 8-8-2001, § II)

Cross reference—Officers and employees, § 2-141 et seq.

Sec. 26-73. Duties, generally.

Upon appointment, the local emergency management agency director shall have direct responsibility for the organization, administration, and operations of the local organization for emergency management, subject to the direction and control of the chairman of the board of commissioners and shall serve at the pleasure of the chairman. The local director shall:

(1) Maintain an emergency management office in a building owned or leased by the political subdivision and the director or designee shall be available or on call at all times beyond working hours.

(2) Develop, in conjunction with public and private agencies/organizations that have responsibility for designated emergency support functions, plans for responding to and recovering from disasters and/or emergencies.

(3) Respond to emergency scenes, command posts, and operation centers.

(4) Coordinate emergency response of public and private agencies and organizations and attend training and meetings convened by the appointing authority or the state emergency management director.

(5) Develop or cause to be developed, in collaboration with other public and private agencies within the state, mutual aid arrangements, consistent with state plans and programs, for reciprocal emergency management aid and assistance in case of emergency or disaster too great to be dealt with unassisted.

(6) Enter into mutual aid agreements, subject to approval of the governor, with emergency management agencies or organizations in other states for reciprocal emergency management aid and assistance in case of emergency or disaster too great to be dealt with unassisted.

(Res. of 8-8-2001, § II)

Sec. 26-74. Powers during an emergency or disaster.

Upon a manmade or natural disaster, actual enemy attack upon the United States, or any other emergency which may affect the lives and property of the citizens of the county, the mayor separately, or jointly with the chairman of the county commissioners, or in their absences their legally appointed successors, may determine that an emergency or disaster exists and thereafter shall have and may exercise for such period as such emergency or disaster exists or continues the following powers:

(1) Enforce all rules, laws and regulations relating to emergency management, and to assume direct operational control over all emergency management resources;

(2) Seize or take for temporary use any private property for the protection of the public;

(3) Sell, lend, give or distribute all or any such property or supplies among the inhabitants of the county and to maintain a strict accounting of property or supplies distributed and for funds received for such property or supplies; and

(4) Perform and exercise such other functions and duties, and take such emergency actions as may be necessary to promote and secure the safety, protection and well-being of the inhabitants of the county.

(Ord. of 8-19-1992, § IV)

Sec. 26-75. Volunteers.

All persons other than officers and employees of the county volunteering in service pursuant to the defense under this article shall serve without compensation. While engaged in such service they shall have the same immunities as officers and employees of the county performing similar duties.

(Ord. of 8-19-1992, § V)

Sec. 26-76. Penalties.

Any person violating any provision of this division, or any rule, order, or regulation made pursuant to this division, shall, upon conviction, be punished as provided in section 1-19.

(Ord. of 8-19-1992, § VI)

Sec. 26-77. Local emergency management powers.

The county shall have the emergency management power and authority to:

(1) Appropriate and expend funds;

(2) Execute contracts;

(3) Obtain and distribute equipment, materials, and supplies;

(4) Provide for the health and safety of persons and property, including emergency assistance to victims;

(5) Direct and coordinate development of local emergency management plans and programs in accordance with federal and state policies and plans;

(6) Appoint, employ, remove or provide, with or without compensation, chiefs of services, warning personnel, rescue teams, auxiliary fire and police personnel, and other emergency management workers;

(7) Establish a primary and one or more secondary control centers to serve as command posts; and

(8) Acquire, temporarily or permanently, by purchase or lease, or otherwise identify sites required for installation of temporary housing units, and prepare or equip such sites.

(Res. of 8-8-2001, § III)

Sec. 26-78. Financial assistance.

The county shall be entitled to receive federal disaster funds if the local emergency management organization has met all state and federal requirements to receive such funds. Qualifications include:

(1) Legal establishment of an emergency management organization by local ordinance or resolution;

(2) A legally appointed local director who has been endorsed and appointed by the state emergency management director;

(3) An approved emergency and disaster plan with all applicable emergency support functions; and

(4) An approved fiscal year program and other necessary compliance documents.

(Res. of 8-8-2001, § IV)

Sec. 26-79. Immunity of state and political subdivisions.

Neither the state nor any political subdivision of the state, nor the agents or representatives of the state or any political subdivision thereof, shall be liable for personal injury or property damage sustained by any person appointed or acting as a volunteer emergency management worker or member of any agency engaged in emergency management activity. Immunity does not apply in cases of willful misconduct, gross negligence or bad faith.

(Res. of 8-8-2001, § V)

Sec. 26-80. Local emergency management agency plan.

The county emergency management agency has developed, in partnership with local government and community agencies/organizations which have primary responsibility for emergency support functions, an approved emergency management plan.

(Res. of 8-8-2001, § VI)

Secs. 26-81—26-125. Reserved.

ARTICLE III. REGISTRATION OF BUILDING AND REPAIR SERVICES DURING A STATE OF EMERGENCY

Sec. 26-126. Building contractor registration required.

No person, firm partnership, corporation or other entity shall engage in, undertake or carry on any business in whole or in part within the unincorporated areas of Jones County, consisting of or relating to building, constructing, repairing, renovating or making improvements to real property including dwellings, homes, buildings, structures, or fixtures attached thereto without having registered the name of the business with the governing authority of the county and having paid fees as provided by this article.

(Ord. No. 2006-09-3o, § 1, 9-19-2006)

Sec. 26-127. Definitions.

Building contractor. As used in this article the word or term "building contractor" shall mean any person, firm, partnership, corporation or other entity engaging in, undertaking or carrying on any business consisting of or relating to building construction, repair, renovation or making improvements to real property including dwellings, homes, buildings, structures, or fixtures attached thereto.

Doing business. Any building contractor shall be deemed to be "doing business" subject to the requirements of this ordinance if: (a) he has or operates an office, agency, project site or place of business located in the unincorporated areas of the county, whether permanently, temporarily, periodically, or otherwise, that provides the following activities in the unincorporated areas of the county expressly including but not limited to the construction, renovation or repair of dwellings or buildings or the making of improvements to real property or any fixtures attached thereto; or (b) he performs the following activities or services in the unincorporated areas of the county expressly including but not limited to the construction, renovation or repair of dwellings or building or the making of improvements to real property or any fixtures attached thereto regardless of the location of the principal office.

State of emergency. The term "state of emergency" is defined pursuant to O.C.G.A. § 38-3-3(5), as a condition declared by the governor when, in his judgment, the threat or actual occurrence of a disaster or is of sufficient severity and magnitude as to warrant extraordinary efforts in preventing or alleviating the damage, loss, hardship, or suffering threatened or caused thereby.

Subsequent recovery period. The term "subsequent recovery period" is defined as the period during which the disaster continues to cause disruptions in the disaster area, but shall not exceed three months after the emergency declaration has been terminated by the governor.
(Ord. No. 200609-3o, § 2, 9-19-2006)

Sec. 26-128. Registration; certification.

All building contractors doing business or proposing to do business in the unincorporated area of Jones County during a state of emergency or the subsequent recovery period shall register and file applications with the clerk of governing authority of the county or such other person designated by the governing authority at the county government center or such other place or places designated by the county. The building contractor shall, under oath, provide the county governing authority with a statement describing the general nature of the business to be conducted and give true and correct information as may be called for on the registration form, application or certificate provided by the county.
(Ord. No. 200609-3o, § 3, 9-19-2006)

Sec. 26-129. Registration fees.

Building contractor registration fees are hereby fixed under the terms and conditions of this article at $50.00 per annum. Registration fees shall be paid in full at the time of issuance of the registration certification.
(Ord. No. 200609-3o, § 4, 9-19-2006)

Sec. 26-130. Penalties.

Any building contractor required by this article to pay a registration fee who engages in business without first registering and receiving a registration certification from the county as required shall be in violation of this article. Violation of this article, upon conviction, shall be punishable by a fine not to exceed $1,000.00 per violation and/or imprisonment not to exceed 60 days. Each day a building contractor does business in the unincorporated areas of the county without complying with this article shall constitute a separate offense.
(Ord. No. 200609-3o, § 5, 9-19-2006)

Sec. 26-131. Transferability.

Each certification issued under this article is granted to, and shall be accepted by, the building contractor under the condition that the same is not transferable and after issuance no such certification shall be transferred by the county or the building contractor to another individual or entity.
(Ord. No. 200609-3o, § 6, 9-19-2006)

Sec. 26-132. Display of registration certification.

Each certification issued hereunder shall be posted conspicuously by the building contractor in the place of business of the building contractor or shall be carried on his person or vehicle used in such business. Such certification shall be exhibited to any authorized enforcement officer when so requested.
(Ord. No. 200609-3o, § 7, 9-19-2006)

Sec. 26-133. Revocation; suspension.

Each certification granted under this article is a mere permit to engage in the business only so long as said business is conducted in a lawful manner. The county governing authority hereby reserves the right to revoke or suspend any certification granted hereunder, if the building contractor, or the building contractor's agent or employee acting within the scope of his employment, violates this article or any other county, state or federal law. If after issuance of a certification, the county desires to revoke such certification, written notice thereof shall be given to the building contractor, which notice shall specify the violation with which the building contractor is charged and a date, time and place at which a hearing shall be held with regard to the violation. The building contractor shall have an opportunity to be heard at such hearing, shall have the right to be represented by counsel, and shall have the right to introduce and submit evidence in opposition to such revocation.
(Ord. No. 200609-3o, § 8, 9-19-2006)

Sec. 26-134. Severability.

If any section, paragraph, sentence, clause, phrase or word of this article is for any reason held by the court to be unconstitutional, inoperative, or void, such holding shall not affect the remainder to the article.
(Ord. No. 200609-3o, § 9, 9-19-2006)

Sec. 26-135. Exemptions.

Any building contractor that is in the process of building new or remodeling construction and has already obtained permits from the county planning and zoning office for a particular project shall be exempt for the permitted project only.
(Ord. No. 200609-3o, § 10, 9-19-2006)

Sec. 26-136. Effective date; expiration.

This article shall take effect on the date of its being duly adopted and shall apply to all building contractors doing business in the unincorporated areas of Jones County on that date and doing business on any date thereafter. However, this article and any certification issued pursuant to it shall be operative only during the period of a declared state of emergency and any subsequent recovery periods.
(Ord. No. 200609-3o, § 11, 9-19-2006)

Chapters 27—29

RESERVED

Chapter 30

EMERGENCY SERVICES*

Article I. In General

Sec. 30-1. Monthly E 911 charge.
Secs. 30-2—30-30. Reserved.

Article II. Identification of Residences

Sec. 30-31. Required.
Sec. 30-32. Location of display.
Secs. 30-33—30-60. Reserved.

Article III. 911 Emergency Answering Service

Sec. 30-61. Definitions.
Sec. 30-62. Established.
Sec. 30-63. Purpose.
Sec. 30-64. Scope of service.
Sec. 30-65. Control of equipment.
Sec. 30-66. Rules, regulations.
Sec. 30-67. Training of employees.
Sec. 30-68. Board of governors.
Sec. 30-69. Division of fiscal responsibility.
Sec. 30-70. Duration of contract.
Sec. 30-71. Gifts, grants.
Sec. 30-72. Claims for aid.
Sec. 30-73. Satisfaction of liabilities.
Sec. 30-74. Resolution of disputes.
Sec. 30-75. Audit.
Sec. 30-76. Agreement administrator.
Sec. 30-77. 9-1-1 charges on prepaid wireless service.

***Cross references—**Businesses and business regulations, ch. 22; civil emergencies, ch. 26; fire prevention and protection, ch. 38.

State law references—Restrictions on operation, installation, maintenance, etc., of electronic security systems by local governments, O.C.G.A. § 36-60-12; Georgia Emergency Telephone Number 911 Service Act of 1977, O.C.G.A. § 46-5-120 et seq.

ARTICLE I. IN GENERAL

Sec. 30-1. Monthly E 911 charge.

(a) Pursuant to O.C.G.A. § 46-5-133, there is hereby imposed a monthly E 911 charge upon each exchange access facility subscribed to by the telephone subscribers whose exchange to access lines are in areas in the incorporated and unincorporated area of the county.

(b) The amount of such charge shall be $1.50 per month per exchange access facility provided to the telephone subscribers in the incorporated and unincorporated areas of the county.
(Res. of 6-6-2000)

Secs. 30-2—30-30. Reserved.

ARTICLE II. IDENTIFICATION OF RESIDENCES

Sec. 30-31. Required.

All owners or residences in the county are hereby required to post their assigned residence or house number in reflective numbers at least three inches in height and the numbers must be visible from the roadway from both directions.
(Ord. of 11-17-1998)

Sec. 30-32. Location of display.

(a) A residence or house may post the identification number on both sides of the mailbox. If no mailbox is present, that owner must post the reflective residence or house number at least three inches in height on a post of sufficient height to be seen from the roadway from both directions.

(b) The placement of this identification number, when not posted on the mailbox, is required to be as close to the driveway as possible.
(Ord. of 11-17-1998)

Secs. 30-33—30-60. Reserved.

ARTICLE III. 911 EMERGENCY ANSWERING SERVICE

Sec. 30-61. Definitions.

The following words, terms and phrases, when used in this article, shall have the meanings ascribed to them in this section, except where the context clearly indicates a different meaning:

Answering center means the Jones County Cooperative 911 Emergency Answering Center established in this article.

City means the City of Gray, Georgia, located in the county.

Party means either the county or the city, whichever is appropriate to the context.
Cross reference—Definitions generally, § 1-4.

Sec. 30-62. Established.

The county and the city hereby form an association known as the Jones County Cooperative 911 Emergency Answering Center, located at the sheriff's office.
(Res. of 3-2-1999, § 1)

Sec. 30-63. Purpose.

The purpose of the answering center is to provide emergency answering services for the parties in this article, and which is referred to as the answering center.
(Res. of 3-2-1999, § 1)

Sec. 30-64. Scope of service.

The county shall provide emergency call answering and dispatch services for law enforcement, fire and emergency medical agencies 24 hours a day, seven days a week, 365 days per year.
(Res. of 3-2-1999, § 2)

Sec. 30-65. Control of equipment.

The county shall hold the title and have custody and control of the answering center's equipment, furnishings and other property, as well as the answering center itself. The county shall further be responsible for acquiring and maintaining the equipment needed in the operation of the answering center. The county shall have sole discretion in determining what equipment is needed for answering center operation.
(Res. of 3-2-1999, § 3)

Sec. 30-66. Rules, regulations.

The sheriff shall make and promulgate any rules and regulations he deems necessary for the operation of the answering center.
(Res. of 3-2-1999, § 4)

Sec. 30-67. Training of employees.

The sheriff shall have the sole power to hire, train and discipline employees working on the premises of or in conjunction with the operation of the answering center.
(Res. of 3-2-1999, § 5)

Sec. 30-68. Board of governors.

The parties agree to form the county cooperative 911 emergency answering center board of governors. The board of governors shall consist of the sheriff, police chief and emergency agency director.
(Res. of 3-2-1999, § 6)

Cross reference—Administration, ch. 2.

Sec. 30-69. Division of fiscal responsibility.

All costs for operating and maintaining the answering center shall be paid initially by the county; and purchases and contracts for the purpose of operating the answering center shall be in the name of the county, provided:

(1) The city shall pay to the county the fee of $1,000.00 per month beginning on March 2, 1999. It is agreed and understood by the parties that this fee shall be renegotiated on an annual basis beginning on January 1, 2000. If an agreement cannot be reached with respect to the fee, either party may terminate this agreement.

(2) The county shall maintain financial records relating to the cost of operating and maintaining the answering center. Such records shall be available to the parties, or their representatives, upon request.

(3) Answering center service payments from the city to the county shall be due the first day of each month.

(Res. of 3-2-1999, § 7)

Sec. 30-70. Duration of contract.

The period of the contract shall be for 60 months. Either party may terminate this agreement by 90 days' written notice to the other party.
(Res. of 3-2-1999, § 8)

Sec. 30-71. Gifts, grants.

All gifts or grants in furtherance of the purpose of the answering center shall be in the name of the county and shall be used for the purpose of reducing the overall operational cost of the answering center.
(Res. of 3-2-1999, § 9)

Sec. 30-72. Claims for aid.

All claims for federal or state aid for the operation of the answering center shall be made by the county.
(Res. of 3-2-1999, § 10)

Sec. 30-73. Satisfaction of liabilities.

Any liabilities incurred by the parties hereto as a result of the operation of the answering center will be paid initially by the county, with each of the parties subsequently paying their pro rata share, except that any individual action of an employee of one of the parties hereto, and not in furtherance of the purpose stated in this article, shall be borne individually by that party.
(Res. of 3-2-1999, § 11)

Sec. 30-74. Resolution of disputes.

Any disputes arising between the parties hereto shall be decided by a majority vote of the board of governors; and in the event the controversy cannot be settled by the board, the director of the department of administrative services, telecommunications division, shall serve as arbitrator, whose decision shall be binding on all parties.
(Res. of 3-2-1999, § 12)

Sec. 30-75. Audit.

All funds, payments and disbursements on behalf of the answering center shall be strictly accountable by the finance department of the county, who shall conduct an annual audit of the answering center. A copy of the audit shall be available to the representatives of any party.
(Res. of 3-2-1999, § 13)

Sec. 30-76. Agreement administrator.

It is agreed by the parties hereto that the sheriff of the county shall serve as the administrator of the agreement in the manner provided in this article.
(Res. of 3-2-1999, § 14)

Sec. 30-77. 9-1-1 charges on prepaid wireless service.

(1) In accordance with O.C.G.A. § 46-5-134.2, there is hereby imposed a prepaid wireless 9-1-1 charge as defined by O.C.G.A. § 46-5-134.2(a)(4) upon every prepaid wireless retail transaction occurring within the jurisdiction of the public service answering point in the amount of $0.75.

(2) *Collection.* Prepaid wireless 9-1-1 charges collected by sellers shall be remitted to the commissioner of the department of revenue at the times and in the manner provided by Chapter 8 of Title 48 of the Official Code of Georgia annotated with respect to the sales and use tax imposed on prepaid wireless calling service.

(3) *Administrative provisions.* The clerk of the county is hereby directed to file with the state revenue commissioner a certified copy of Ord. No. 201107-1o and amendments thereto, in accordance with O.C.G.A. § 46-5-134.2(j)(1), within ten days of enactment of this article.

(4) *Depositing of funds; use of funds.* In accordance with O.C.G.A., § 46-5-134.2(j)(5), funds received by this county from charges imposed by this article shall be deposited in the emergency telephone system fund maintained by this county pursuant to O.C.G.A. § 46-5-134 and kept separate from general revenue of the jurisdiction; all such funds shall be used exclusively for the purposes authorized by O.C.GA § 46-5-134(f).
(Ord. No. 201107-1o, §§ 1—4, 7-19-2011)

Chapters 31—33

RESERVED

Chapter 34

ENVIRONMENT*

Article I. In General

Sec. 34-1. Restriction of outdoor water of landscape.
Sec. 34-2. Enforcement.
Secs. 34-3—34-30. Reserved.

Article II. Noise Control

Sec. 34-31. General prohibition.
Sec. 34-32. Enumeration.
Sec. 34-33. Horns; signaling devices.
Sec. 34-34. Radios, phonographs, other machines or devices that produce or reproduce sound.
Sec. 34-35. Loudspeakers; amplifiers; other devices for production or reproduction of sound for advertising.
Sec. 34-36. Yelling; shouting; hooting; whistling; singing.
Sec. 34-37. Reserved.
Sec. 34-38. Steam whistle.
Sec. 34-39. Exhausts.
Sec. 34-40. Defect in vehicle or load.
Sec. 34-41. Loading; unloading; opening boxes.
Sec. 34-42. Construction or repairing of buildings.
Sec. 34-43. Schools; courts; churches; hospitals.
Sec. 34-44. Hawkers; peddlers; vendors.
Sec. 34-45. Noises to attract attention.
Sec. 34-46. Transportation of metal rails, pillars or columns.
Sec. 34-47. Piledrivers, hammers, other such appliances.
Sec. 34-48. Blowers.
Sec. 34-49. Sound trucks.
Sec. 34-50. Vehicle repair in residential areas.
Sec. 34-51. Exemptions.
Sec. 34-52. Injunctions.
Secs. 34-53—34-80. Reserved.

Article III. Nuisances

Division 1. Generally

Sec. 34-81. Defined.
Sec. 34-82. Enumeration.
Sec. 34-83. Maintaining or permitting nuisance prohibited.
Sec. 34-84. Issuance of summons for abatement.

***Cross references—**Animals, ch. 14; buildings, construction and related activities, ch. 18; floods, ch. 42; health and sanitation, ch. 46; historic preservation, ch. 50; roads, ch. 58; solid waste, ch. 62; water and sewers, ch. 74; comprehensive land development, app. A.

Sec. 34-85. Order for abatement.
Sec. 34-86. Special provisions for old, unused, stripped, junked automobiles.
Sec. 34-87. Nuisances constituting imminent danger.
Sec. 34-88. Service of notice on nonresidents and others regarding nuisances.
Sec. 34-89. Aditional powers of magistrate judge to punish.
Secs. 34-90—34-110. Reserved.

Division 2. Vegetation

Sec. 34-111. Certain weeds, grasses and plants declared a nuisance; exemptions.
Sec. 34-112. Height permitted.
Sec. 34-113. Notice to abate.
Sec. 34-114. Abatement by county; notice of abatement.
Sec. 34-115. Remedies.
Sec. 34-116. Award of contracts for clearing of lots by county.
Secs. 34-117—34-140. Reserved.

Division 3. Mosquito Control

Sec. 34-141. Nuisance declared.
Sec. 34-142. Keeping water in which mosquitoes may breed.
Sec. 34-143. Treatment of collections of water.
Sec. 34-144. Mosquito larvae as evidence of breeding.
Sec. 34-145. Failure to remedy conditions after notice.
Sec. 34-146. Right of entry of health officer.
Secs. 34-147—34-170. Reserved.

Article IV. Soil Erosion and Sedimentation Control

Division 1. Generally

Sec. 34-171. Definitions.
Sec. 34-172. Exemptions.
Sec. 34-173. Inspection of permitted sites; notice to comply; failure.
Sec. 34-174. Right of zoning director to enter upon public or private property.
Sec. 34-175. Refusal or obstruction of access to property by inspectors.
Sec. 34-176. Review of issuing authority's actions; deadline for corrective action.
Sec. 34-177. Failure to obtain a permit for land-disturbing activity.
Sec. 34-178. Stop work orders.
Sec. 34-179. Bond forfeiture.
Sec. 34-180. Monetary penalties.
Sec. 34-181. Administrative remedies.
Sec. 34-182. Judicial review.
Sec. 34-183. Liability.
Sec. 34-184. Title.
Sec. 34-185. Requirement to amend.
Secs. 34-186—34-200. Reserved.

Division 2. Permit Procedures

Sec. 34-201. Review of ordinances regulating land development by applicant.

Sec. 34-202. Application requirements.
Sec. 34-203. Plan requirements.
Sec. 34-204. Issuance, denial of permits.
Sec. 34-205. Approval of plan prior to issuance.
Sec. 34-206. Phased development; separate permits.
Sec. 34-207. Suspension, revocation, rejection or modification.
Sec. 34-208. Reserved.
Sec. 34-209. Injury of permit holder to property of another.
Sec. 34-210. Education and certification.
Secs. 34-211—34-230. Reserved.

Division 3. Minimum Requirements

Sec. 34-231. Plans to contain control measures and practices; application and installation.
Sec. 34-232. Best management practices.
Sec. 34-233. Conservation and engineering practices.
Sec. 34-234. Adoption of requirements exceeding division standards.
Sec. 34-235. Effectivity.
Sec. 34-236. Validity.

ARTICLE I. IN GENERAL

Sec. 34-1. Restriction of outdoor water of landscape.

Outdoor watering for purposes of planting, growing, managing, or maintaining ground cover, trees, shrubs, or other plants in the unincorporated area may occur only between the hours of 4:00 p.m. and 10:00 a.m.; provided, however, that this limitation shall not create any limitation upon the following outdoor water uses:

(a) Commercial raising, harvesting, or storing of crops; feeding, breeding, or managing livestock or poultry; the commercial production or storing of feed for use in the production of livestock, including, but not limited to, cattle, calves, swine, hogs, goats, sheep, and rabbits, or for use in the production of poultry, including, but not limited to, chickens, hens, ratites, and turkeys; producing plants, trees, fowl, or animals; or the commercial production of aquacultural, horticultural, dairy, livestock, poultry, eggs, and apiarian products or as otherwise defined in O.C.G.A. § 1-3-3;

(b) Capture and reuse of cooling system condensate or stormwater in compliance with applicable ordinances and state guidelines;

(c) Reuse of gray water in compliance with O.C.G.A. § 31-3-5.2 and applicable local board of health regulations;

(d) Use of reclaimed waste water by a designated user from a system permitted by the Environmental Protection Division of the Georgia Department of Natural Resources to provide reclaimed waste water;

(e) Watering personal food gardens;

(f) Watering new and replanted plant, seed, or turf in landscapes, golf courses, or sports turf fields during installation and for a period of 30 days immediately following the date of installation;

(g) Drip irrigation or irrigation using soaker hoses;

(h) Hand watering with a hose with automatic cutoff or handheld container;

(i) Use of water withdrawn from private water wells or surface water by an owner or operator of property if such well or surface water is on said property;

(j) Watering horticultural crops held for sale, resale, or installation;

(k) Watering athletic fields, golf courses, or public turf grass recreational areas;

(l) Installation, maintenance, or calibration of irrigation systems; or

(m) Hydro seeding.

(Ord. No. 2010-11, § 1.01, 12-10-2010)

Sec. 34-2. Enforcement.

(a) No person shall use or allow the use of water in violation of the restrictions on outdoor water use contained in ordinance.

(b) The Jones County Water Department shall be the enforcement authority for this chapter. The county administrator may also authorize other departments as may be deemed necessary to support enforcement.

(c) Criminal and alternative penalties. Any violation of this section may also be enforced by a citation or accusation returnable to the magistrate court or by any other legal means as set forth in this code.
(Ord. No. 2010-11, § 1.02, 12-10-2010)

Secs. 34-3—34-30. Reserved.

ARTICLE II. NOISE CONTROL*

Sec. 34-31. General prohibition.

It shall be unlawful for any person to make, continue or cause to be made or continued any loud, unnecessary or unusual noise or any noise that unreasonably or unnecessarily annoys, disturbs, injures or endangers the comfort, repose, health, peace or safety of others in the county. The provisions of this section shall not apply to or be enforced against:

(1) Any vehicle of the county while engaged in necessary public business.

(2) Excavations or repairs of streets by or on behalf of the county or state at night when public welfare and convenience render it impossible to perform such work during the day.

(3) The reasonable use of amplifiers or loudspeakers in the course of public addresses that are noncommercial in character.

Sec. 34-32. Enumeration.

The acts contained in this article, among others, shall constitute a violation of this article; but such enumeration shall not be deemed to be exclusive.

Sec. 34-33. Horns; signaling devices.

The following shall be a violation of this article:

(1) The sounding of any horn or signaling device on any automobile, motorcycle or other vehicle on any street or public place in the county except as a danger warning.

(2) The creation of any unreasonably loud or harsh sound by means of any such signaling device and the sounding of any such device for an unreasonable period of time.

(3) The use of any signaling device, except a police whistle or one operated by hand or electricity.

***State law references—**Limits on sound volume produced by radio, tape player or other mechanical sound-making device or instrument from within motor vehicle, O.C.G.A. § 40-6-14; sale of muffler which causes excessive noise prohibited, O.C.G.A. § 40-8-71(c).

(4) The use of any horn, whistle or other device operated by engine exhaust.

(5) The use of any signaling device when traffic is held up for any reason.

Sec. 34-34. Radios, phonographs, other machines or devices that produce or reproduce sound.

The using, operating or permitting to be played, used or operated of any radio receiving set, musical instrument, phonograph or other machine or device for the producing or reproducing of sound in such manner as to disturb the peace, quiet and comfort of the neighboring inhabitants, or at any time with louder volume than is necessary for convenient hearing for the person who is in the room, vehicle or chamber in which such machine or device is operated and who is a voluntary listener shall be a violation of this article. The operation of any such set, instrument, phonograph, machine or device between the hours of 9:00 p.m. and 7:00 a.m. in such a manner as to be plainly audible at a distance of 50 feet from the building, structure or vehicle in which it is located shall be prima facie evidence of a violation of this section.

Sec. 34-35. Loudspeakers; amplifiers; other devices for production or reproduction of sound for advertising.

The using, operating or permitting to be played, used or operated of any radio receiving set, musical instrument, phonograph, loudspeaker, sound amplifier or other machine or device for the producing or reproducing of sound which is cast upon the public streets for the purpose of commercial advertising or attracting the attention of the public to any building or structure without a special permit from the county clerk or board of commissioners shall be a violation of this article. Announcements over loudspeakers can only be made by the announcer, in person, and without the aid of any mechanical device.

Sec. 34-36. Yelling; shouting; hooting; whistling; singing.

Yelling, shouting, hooting, whistling or singing on the public streets, particularly between the hours of 9:00 p.m. and 7:00 a.m. or at any time or place so as to annoy or disturb the quiet, comfort or repose of any persons in the vicinity shall be a violation of this article.

Sec. 34-37. Animals and birds.

The keeping of any animal or bird that will disturb the comfort or repose of any persons in the vicinity by making long, continual or frequent noise shall be a violation of this article.

Sec. 34-38. Steam whistle.

The blowing of any train whistle or steam whistle attached to any stationary boiler except to give notice of the time to begin or stop work or as a warning of fire or danger or upon request of proper county authorities shall be a violation of this article.

Sec. 34-39. Exhausts.

The discharge into the open air of the exhaust of any steam engine, stationary internal combustion engine, motorboat or motor vehicle except through a muffler or other device that will effectively prevent loud or explosive noises shall be a violation of this article.

Sec. 34-40. Defect in vehicle or load.

The use of any automobile, motorcycle or vehicle so out of repair, so loaded or in such manner as to create loud and unnecessary grating, grinding, rattling or other noise shall be a violation of this article.

Cross reference—Traffic and vehicles, ch. 70.

Sec. 34-41. Loading; unloading; opening boxes.

The creation of a loud and excessive noise in connection with loading or unloading any vehicle or the opening and destruction of bales, boxes, crates and containers shall be a violation of this article.

Sec. 34-42. Construction or repairing of buildings.

The erection, including excavation, demolition, alteration or repair, of any building other than between the hours of 7:00 a.m. and 6:00 p.m. on weekdays, except on urgent necessity in the interest of public health and safety, and then only with a permit from the county building official shall be a violation of this article. Such permit may be granted for a period not to exceed three days or less while the emergency continues and may be renewed by the board of commissioners for periods of three days or less while the emergency continues. If the board of commissioners determines that the public health and safety will not be impaired by the erection, demolition, alteration or repair of any building or the excavation of streets and highways from 6:00 p.m. to 7:00 a.m., and further determines that loss or inconvenience would result to any party in interest, the board may grant permission for such work to be done from 6:00 p.m. to 7:00 a.m., upon application made at the time the permit for the work is applied for or during the progress of the work.

Cross reference—Buildings, construction and related activities, ch. 18.

Sec. 34-43. Schools; courts; churches; hospitals.

The creation of any excessive noise on any street adjacent to any school, institution of learning, church or court while they are in session or adjacent to any hospital, and which unreasonably interferes with the work of such institution, or which disturbs or unduly annoys patients in the hospital, provided that conspicuous signs are displayed about such institutions indicating the presence of such institutions, shall be a violation of this article.

Sec. 34-44. Hawkers; peddlers; vendors.

The shouting and crying of hawkers, peddlers and vendors which disturb the peace and quiet of the neighborhood shall be a violation of this article.

Sec. 34-45. Noises to attract attention.

The use of any drum or other instrument or device for the purpose of attracting attention to any performance, show or sale by creation of noise shall be a violation of this article.

Sec. 34-46. Transportation of metal rails, pillars or columns.

The transportation of rails, pillars or columns of iron, steel or other material over and along streets and other public places upon carts, drays, cars, trucks or in any other manner so loaded as to cause loud noises or as to disturb the peace and quiet of such streets or other public places shall be a violation of this article.

Cross reference—Traffic and vehicles, ch. 70.

Sec. 34-47. Piledrivers, hammers, other such appliances.

The operation from 6:00 p.m. to 7:00 a.m. of any piledriver, steam shovel, pneumatic hammer, derrick, steam or electric hoist or other appliance the use of which is attended by loud or unusual noise without a special permit from the board of commissioners shall be a violation of this article.

Sec. 34-48. Blowers.

The operation of any noise-creating blower or power fan or any internal combustion engine, the operation of which causes noise due to the explosion of operating gases or fluids, unless the noise from such blower or fan is muffled and such engine is equipped with a muffler device sufficient to deaden such noise, shall be a violation of this article.

Sec. 34-49. Sound trucks.

The use of mechanical loudspeakers or amplifiers on trucks or other moving or standing vehicles for advertising or other commercial purposes and the use of sound trucks for noncommercial purposes during such hours or in such places or with such volume as would constitute such use a public nuisance shall be a violation of this article.

Sec. 34-50. Vehicle repair in residential areas.

The repairing, rebuilding, or testing of any motor vehicle between the hours of 10:00 p.m. and 7:00 a.m. within any residential area in such a manner as to disturb the peace, quiet, and comfort of the residents of the area shall be a violation of this article.

Cross reference—Traffic and vehicles, ch. 70.

Sec. 34-51. Exemptions.

The following uses and activities shall be exempt from noise regulations set forth in this article:

(1) Noises of safety signals and warning devices.

(2) Noises resulting from any authorized emergency vehicle, when responding to an emergency call or responding to an emergency.

(3) Noises resulting from emergency work, to be construed as work made necessary to restore property to a safe condition following a public calamity, or work requited to protect persons or property from an imminent exposure to danger.

(4) Applications for other exemptions should be filed with the county clerk for approval by the chairman, and should state the time, date, organization and reason for the request.

Sec. 34-52. Injunctions.

The operation or maintenance of any device, vehicle, or machinery in violation of any provision of this article which causes discomfort or annoyance to reasonable persons of normal sensitivity or which endangers the comfort, repose, health, or peace of residents of this county shall be deemed, and is declared to be, a public nuisance, and may be subject to abatement summarily by a restraining order or injunction issued by a court of competent jurisdiction.

Secs. 34-53—34-80. Reserved.

ARTICLE III. NUISANCES*

DIVISION 1. GENERALLY

Sec. 34-81. Defined.

A nuisance is anything within the county that causes hurt, inconvenience or damage to another; and the fact that the act done may otherwise be lawful shall not keep it from being a nuisance. The inconvenience complained of shall not be fanciful or such as would affect only one of fastidious taste, but it shall be such as would affect an ordinary, reasonable person. Any such nuisance may be abated as provided in this article.

Cross reference—Definitions generally, § 1-4.

State law reference—Similar provisions, O.C.G.A. § 41-1-1.

Sec. 34-82. Enumeration.

(a) The various nuisances described and enumerated in this section shall not be deemed to be exclusive but shall be in addition to all other nuisances described and prohibited in this Code.

(b) The following are declared to be nuisances:

(1) *Things interfering with peace or comfort.* Sounds, animals or things that interfere with the peace or comfort, or disturb the quiet of the county.

(2) *Obnoxious, offensive odors.* The emission of obnoxious and offensive odors; the tainting of the air rendering it offensive or unwholesome so as to affect the health or comfort of reasonable persons residing in the neighborhood.

***State law references—**Nuisances, O.C.G.A. § 41-1-1 et seq.; jurisdiction of municipal court or magistrate court to abate nuisances, O.C.G.A. § 41-2-5.

(3) *Discharging of offensive matter.* The placing or throwing or discharging from any house or premises and flow from or out of any house or premises, of any filthy, foul or offensive matter or liquid of any kind, into any street, alley or public place, or upon any adjacent lot or ground.

(4) *Water pollution.* The obstruction or pollution of any watercourse or source of water supply in the county.

(5) *Emission of dense smoke.* The emission of dense smoke from any fire, chimney, engine, oil burner or other agency in the county so as to cause disturbance or discomfort to the public. For the purpose of testing and grading the density of smoke, the Ringelmann smoke chart, as published and used by the United States Geological Survey, shall be the standard for such grading; and smoke shall be defined and declared to be dense when it is of a degree of density of number three on the chart, or greater, for more than six minutes in any one hour, whether such period of time is consecutive or not.

(6) *Vacant lots.* Any vacant lot whereon debris is permitted to accumulate and remain in such a manner as to create a fire hazard or other hazard to the public health, safety and welfare.

(7) *Nonconforming structures and machines.* Any building, business, thing, machine or machinery, erected, repaired, conducted, maintained, operated or used contrary to or in violation of any of the fire and safety regulations of this Code, state law or county ordinance.

(8) *Animal enclosures.* Any enclosure in which any animals are kept, dog kennels or runs and other animal or fowl pens wherein manure, dung, filth or litter is allowed to accumulate.

(9) *Dead animals.* The carcass of any dead animal of any kind on any premises within the county.

(10) *Depositing trash, garbage and refuse on private or public property.* The depositing and leaving on private or public property of trash, garbage, refuse, scrap building materials, paper, cardboard containers, brick, cement rubbish, tree residue, cans, containers, or any other rubbish or trash that is a menace to public health and safety in the county or which unreasonably annoys others.

(11) *Unoccupied buildings.* Unoccupied buildings that are not properly whitewashed or cleansed.

(12) *Unsafe vehicles, machinery and equipment.* Unsheltered storage of old, unused, stripped, junked, and other automobiles not in good and safe operating condition, and of any other vehicles, machinery, implements, and/or equipment and personal property of any kind that is no longer safely usable for the purposes for which it was manufactured for a period of 30 days or more (except in licensed junkyards). The absence of a license plate for the current year and/or the absence of a current motor vehicle registration shall be prima facie evidence that such vehicle is junked.

(13) *Gutters or spouts.* Any gutter or spout that conveys filth into any street, lane or alley of the county.

Sec. 34-83. Maintaining or permitting nuisance prohibited.

It shall be unlawful for any person to maintain or permit the existence of any nuisance on any property within the county.

Sec. 34-84. Issuance of summons for abatement.

Whenever any nuisance exists within the county, or whenever any condition shall exist on any property within the county that is required or subject to be demolished, removed or abated under any of the ordinances of the county, and the owner or other responsible person refuses or fails after reasonable notice to demolish, remove or abate the nuisance, the chief of police, or the officer having responsibility for enforcement of this article, may issue a summons and cause the summons to be served upon such owner or other person responsible for such condition, describing the condition complained of and specifying the ordinances or parts of ordinances claimed to be violated, and requiring such person to appear before the magistrate judge at a time, date and place specified in the summons, to show cause why such condition should not be demolished, removed or abated.

Sec. 34-85. Order for abatement.

(a) If the magistrate judge at the hearing required by section 34-84 shall determine that a condition does exist as alleged that constitutes a nuisance or a condition which under this Code or the ordinances of the county is required or subject to be demolished, removed or abated, the judge shall issue his order and judgment so finding and shall order the property owner or other responsible person to demolish, remove or abate the condition within a period of time to be fixed by the judge. The order shall provide how the condition is to be abated, including but not limited to rehabilitation or demolition of any buildings or structures located on the property in question. The order shall further provide that if the property owner or other responsible person shall fail to comply with the order within the time specified, the county shall be authorized to proceed without further notice to demolish, remove or abate such condition and to take whatever actions deemed necessary to demolish, remove or abate such condition; and the expense shall be charged against the owner of the property in question and shall be a lien against the property upon which the condition existed, ranking equally with the lien for county taxes.

(b) Execution shall issue for such costs as in the case of county taxes, and the procedure for the enforcement of the execution shall thereafter be the same as in the case of county taxes.

State law reference—Authorization and procedure for abatement of nuisances in cities, O.C.G.A. § 41-2-5.

Sec. 34-86. Special provisions for old, unused, stripped, junked automobiles.

(a) Unsheltered storage of old, unused, stripped, junked and other automobiles not in good and safe operating condition, and of any other vehicles, machinery, implements, and/or equipment and personal property of any kind that is no longer safely usable for the purposes for which it was manufactured, for a period of 30 days or more (except in licensed junkyards) within the corporate limits of this county is a nuisance.

(b) The owners, tenants, lessees and/or occupants of any lot within the corporate limits of this county upon which the storage of property is made, and also the owners and/or lessees of the property involved in such storage shall jointly and severally abate the nuisance by the prompt removal of the property into completely enclosed buildings authorized to be used for such storage purposes, if within the corporate limits of the county, or otherwise by removing it to a location outside the corporate limits.

Sec. 34-87. Nuisances constituting imminent danger.

Whenever any condition shall exist which constitutes an immediate and grave hazard to public health and safety requiring immediate action, the condition may be abated or otherwise remedied summarily and without following the procedures set forth in sections 34-84 and 34-85.

Sec. 34-88. Service of notice on nonresidents and others regarding nuisances.

Whenever it shall be necessary for the county to proceed under sections 34-84 and 34-85 and the owner of the property or other responsible person resides outside the county limits, or cannot be found after diligent search, service of the notice required by section 34-85 shall be made by posting a copy of the notice on the property involved, and by publishing the notice in a newspaper having general circulation in the county once a week for four consecutive weeks, the last notice to be not longer than ten days nor less than one day prior to the hearing. Where the address of the person to be served is known, or where there is a last known address, a copy of the notice shall also be mailed to the person at such address by certified mail. In all cases where personal service cannot be made upon such person within the county limits, the case shall proceed as quasi in rem, and the execution shall issue in rem.

Sec. 34-89. Aditional powers of magistrate judge to punish.

Nothing in this article shall in any way affect the power and authority of the magistrate judge to punish for any violations which the conditions may constitute, nor shall it affect the power and authority of the magistrate judge to punish by contempt the failure to comply with his order.

Secs. 34-90—34-110. Reserved.

DIVISION 2. VEGETATION

Sec. 34-111. Certain weeds, grasses and plants declared a nuisance; exemptions.

(a) Any weeds such as jimson, burdock, ragweed, thistle, cocklebur or other weeds of a like kind found growing in any lot or tract of land in the county, and any weeds, grasses or plants other than trees, bushes, flowers or other ornamental plants growing to a height exceeding 12 inches anywhere in the county are hereby declared to be a nuisance, subject to abatement as provided in this division.

(b) Garden flowers, vegetables, cultivated agricultural crops, ornamental shrubbery and trees shall not be considered weeds, grass or vegetation within the meaning of this section.

(c) The provisions of this division shall apply only to property located within subdivisions of record in the office of the clerk of the superior court of the county, and to the original county lots. They shall not apply to undeveloped areas of unsubdivided land within the county.

Sec. 34-112. Height permitted.

It shall be unlawful for the owner, lessee, tenant or other person having the possession and control of real property, or responsible for its management, maintenance or upkeep, to permit the growth and accumulation of weeds, grass or other vegetation to a height in excess of 12 inches above the ground.

Sec. 34-113. Notice to abate.

(a) For a violation of this division, the owner of the property shall be given notice to remove excess growth within seven days from the receipt of the notice. Such notice may be served personally, or may be served by registered or certified mail, or by attaching a copy of the notice to the principal entrance of the dwelling, and shall contain a description of the location of the property upon which such condition exists.

(b) Where notice is given by registered or certified mail, the depositing of such notice in the United States mail by registered or certified mail, return receipt requested, addressed to the owner of the property at the address shown on the latest ad valorem tax return of such owner for such property shall constitute sufficient service of such notice, where the return receipt shall be duly returned signed by the addressee or someone residing on the premises, or where the return receipt or other notification from the federal postal service indicates that the notice was refused, or that there was a refusal to sign the return receipt or that delivery of the notice at such address could not be made.

Sec. 34-114. Abatement by county; notice of abatement.

(a) Upon the failure to comply within the required time by the owner of the property when properly notified pursuant to the provisions of section 34-113, the county is authorized to have the contractor enter upon the property; and the contractor is authorized to enter the property, and cut and remove the weeds, grass and vegetation. The county shall issue a lot cleaning order to the contractor, who shall promptly perform the work and submit his bill to the county. The county shall inspect the work, and if satisfactory, shall approve the bill for payment and forward it to the county treasurer for payment.

(b) The county treasurer shall promptly send to the owner of the property a statement of account demanding payment on or before a date named in such demand, which shall not be earlier than 15 days nor later than 45 days after payment to the contractor.

(c) If payment under subsection (b) of this section shall not have been made on or before the date named, the county treasurer shall issue a notice directed to the owner of the property and signed by the magistrate judge, notifying such owner to show cause before the judge at a time and place and on a date named in the notice why execution should not issue against the property for its approval amount.

(d) If it shall appear at such hearing that the property was in violation of this division, that the notice required in section 34-113 was given, that the work was performed and the cost paid by the county, and that the county has not been reimbursed, execution shall issue for such amount, and shall be executed by the chief of police in the same manner as tax executions are executed.

(e) If the owner of the property is unknown or cannot be located, the provisions of subsections (b) and (c) of this section shall not apply; but in lieu thereof a notice shall be published once a week for four weeks in a newspaper of general circulation in the county, which notice shall be addressed "To Whom It May Concern"; shall describe with reasonable particularity the property involved; shall provide a statement of the amount due for the removal of the weeds, grass or other vegetation, and shall notify all persons interested to show cause before the magistrate judge at a time and place and on a date named in the notice why execution should not issue in rem against the property for such amount. In such event, subsection (a) of this section will apply, but the execution shall issue against the property in rem.

Sec. 34-115. Remedies.

The remedies provided in this division are cumulative of all other remedies the county has for the accomplishment of the objectives set forth in this division. Nothing in this division shall be construed as relieving any person from the obligation to comply with this Code, all ordinances, laws or regulations of the county, or to permit the maintenance by any person of a nuisance; and any nuisance shall be subject to be abated in the manner provided by law.

Sec. 34-116. Award of contracts for clearing of lots by county.

Prior to the commencement of each fiscal year, the county shall obtain bids from contractors or other qualified persons for clearing lots of weeds, grass and other vegetation not in excess of two inches in diameter, and for clearing lots of weeds, grass and other vegetation in excess of two inches but not in excess of four inches in diameter; and the board of commissioners shall award a contract to the lowest and best bidder, such contract to remain in effect during the ensuing fiscal year.

Secs. 34-117—34-140. Reserved.

DIVISION 3. MOSQUITO CONTROL

Sec. 34-141. Nuisance declared.

A violation of any provision of this division is a nuisance.

Sec. 34-142. Keeping water in which mosquitoes may breed.

(a) It shall be unlawful to have, keep, maintain, cause or permit within the county any collection of standing or flowing water in which mosquitoes breed or are likely to breed unless such collection of water is so treated as to effectually prevent such breeding.

(b) The collections of water prohibited by subsection (a) of this section shall be those contained in ditches, pools, ponds, excavations, holes, depressions, open cesspools, privy vaults, fountains, cisterns, tanks, shallow wells, barrels, troughs (except horse troughs in frequent use), urns, cans, boxes, bottles, tubs, buckets, defective house roof gutters, tanks of flush closets, or other similar water containers.

Sec. 34-143. Treatment of collections of water.

The method of treatment of any collections of water that are specified in section 34-142 directed toward the prevention of breeding of mosquitoes shall be approved by the health officer and may be one or more of the following:

(1) Screening with wire netting of at least 16 meshes to the inch each way, or with any other material that will effectually prevent the ingress or egress of mosquitoes.

(2) Complete emptying every seven days of unscreened containers, together with their thorough drying and cleaning.

(3) Using a larvicide approved and applied under the direction of the health officer.

(4) Covering completely the surface of the water with kerosene, petroleum or paraffin oil once every seven days.

(5) Cleaning and keeping sufficiently free of vegetable growth and other obstructions, and stocking with mosquito-destroying fish.

(6) Filling and draining to the satisfaction of the health officer, his agent or accredited representative.

(7) Proper disposal by removal or destruction of tin cans, tin boxes, broken or empty bottles and similar articles likely to hold water.

Sec. 34-144. Mosquito larvae as evidence of breeding.

The natural presence of mosquito larvae in standing or running water shall be evidence that mosquitoes are breeding there; and failure to prevent such breeding within three days after notice by the health officer, his authorized agent or representative, shall be deemed a violation of this division.

Sec. 34-145. Failure to remedy conditions after notice.

Should the person responsible for conditions giving rise to the breeding of mosquitoes fail or refuse to take necessary measures to prevent the breeding of mosquitoes, within three

days after due notice has been given to him, the health officer or his authorized agent is authorized to do so; and all necessary costs incurred by him for this purpose shall be a charge against the property owner or other person offending, as the case may be.

Sec. 34-146. Right of entry of health officer.

For the purpose of enforcing the provisions of this division, the health officer, or his duly accredited agent under his authority, may at all reasonable times lawfully enter in and upon any premises within his jurisdiction.

Secs. 34-147—34-170. Reserved.

ARTICLE IV. SOIL EROSION AND SEDIMENTATION CONTROL*

DIVISION 1. GENERALLY

Sec. 34-171. Definitions.

The following definitions shall apply in the interpretation and enforcement of this article, unless otherwise specifically stated:

Best management practices (BMPs): These include sound conservation and engineering practices to prevent and minimize erosion and resultant sedimentation, which are consistent with, and no less stringent than, those practices contained in the "Manual for Erosion and Sediment Control in Georgia" published by the commission as of January 1 of the year in which the land-disturbing activity was permitted.

Board: The Board of Natural Resources.

Buffer: The area of land immediately adjacent to the banks of state waters in its natural state of vegetation, which facilitates the protection of water quality and aquatic habitat.

Certified personnel: A person who has successfully completed the appropriate certification course approved by the Georgia Soil and Water Conservation Commission.

Coastal Marshlands: Shall have the same meaning as in O.C.G.A. 12-5-282.

Commission: The Georgia Soil and Water Conservation Commission (GSWCC).

CPESC: Certified professional in erosion and sediment control with current certification by EnviroCert, Inc., which is also referred to as CPESC or CPESC, Inc.

***Editor's note—**Ord. No. 2010-07, adopted July 20, 2010, amended art. IV in its entirety to read as herein set out. Former art. IV consisted of §§ 34-171—34-183, 34-201—34-210, 34-231—34-234, pertained to the same subject matter and derived from ordinances adopted Jan. 2, 2001, and June 15, 2004.

State law references—Erosion and Sedimentation Act of 1975, O.C.G.A. § 12-7-1 et seq.; local land disturbing activity ordinances, O.C.G.A. § 12-7-4.

Cut: A portion of land surface or area from which earth has been removed or will be removed by excavation; the depth below original ground surface to the excavated surface. Also known as excavation.

Department: The Georgia Department of Natural Resources (DNR).

Design professional: A professional licensed by the State of Georgia in the field of: engineering, architecture, landscape architecture, forestry, geology, or land surveying; or a person that is a certified professional in erosion and sediment control (CPESC) with a current certification by EnviroCert, Inc. Design Professionals shall practice in a manner that complies with applicable Georgia law governing professional licensure.

Director: The director of the environmental protection division or an authorized representative.

District: The Piedmont Soil and Water Conservation District.

Division: The Environmental Protection Division (EPD) of the Department of Natural Resources.

Drainage structure: A device composed of a virtually nonerodible material such as concrete, steel, plastic or other such material that conveys water from one place to another by intercepting the flow and carrying it to a release point for stormwater management, drainage control, or flood control purposes.

Erosion: The process by which land surface is worn away by the action of wind, water, ice or gravity.

Erosion, sedimentation and pollution control plan: A plan required by the Erosion and Sedimentation Act, O.C.G.A. Chapter 12-7, that includes, as a minimum protections at least as stringent as the State General Permit, best management practices, and requirements in section 34.233 of this article.

Fill: A portion of land surface to which soil or other solid material has been added; the depth above the original ground surface or an excavation.

Final stabilization: All soil disturbing activities at the site have been completed, and that for unpaved areas and areas not covered by permanent structures and areas located outside the waste disposal limits of a landfill cell that has been certified by EPD for waste disposal, 100 percent of the soil surface is uniformly covered in permanent vegetation with a density of 70 percent or greater, or landscaped according to the plan (uniformly covered with landscaping materials in planned landscape areas), or equivalent permanent stabilization measures as defined in the manual (excluding a crop of annual vegetation and seeding of target crop perennials appropriate for the region). Final stabilization applies to each phase of construction.

Finished grade: The final elevation and contour of the ground after cutting or filling and conforming to the proposed design.

Grading: Altering the shape of ground surfaces to a predetermined condition; this includes stripping, cutting, filling, stockpiling and shaping or any combination thereof and shall include the land in its cut or filled condition.

Ground elevation: The original elevation of the ground surface prior to cutting or filling.

Land-disturbing activity: Any activity which may result in soil erosion from water or wind and the movement of sediments into state waters or onto lands within the state, including, but not limited to, clearing, dredging, grading, excavating, transporting, and filling of land but not including agricultural practices as described in subsection 34-172(5).

Larger common plan of development or sale: A contiguous area where multiple separate and distinct construction activities are occurring under one plan of development or sale. For the purposes of this paragraph, "plan" means an announcement; piece of documentation such as a sign, public notice or hearing, sales pitch, advertisement, drawing, permit application, zoning request, or computer design; or physical demarcation such as boundary signs, lot stakes, or surveyor markings, indicating that construction activities may occur on a specific plot.

Local issuing authority: The governing authority of any county or municipality which is certified pursuant to O.C.G.A. 12-7-8(a).

Metropolitan River Protection Act (MRPA): A state law referenced as O.C.G.A. § 12-5-440 et seq. which addresses environmental and developmental matters in certain metropolitan river corridors and their drainage basins.

Natural ground surface: The ground surface in its original state before any grading, excavation or filling.

Nephelometric turbidity units (NTU): Numerical units of measure based upon photometric analytical techniques for measuring the light scattered by finely divided particles of a substance in suspension. This technique is used to estimate the extent of turbidity in water in which colloidally dispersed or suspended particles are present.

NOI: A notice of intent form provided by EPD for coverage under the state general permit.

NOT: A notice of termination form provided by EPD to terminate coverage under the state general permit.

Operator: The party or parties that have: (A) operational control of construction project plans and specifications, including the ability to make modifications to those plans and specifications; or (B) day-to-day operational control of those activities that are necessary to ensure compliance with an erosion, sedimentation and pollution control plan for the site or other permit conditions, such as a person authorized to direct workers at a site to carry out activities required by the erosion, sedimentation and pollution control plan or to comply with other permit conditions.

Outfall: The location where stormwater in a discernible, confined and discrete conveyance, leaves a facility or site or, if there is a receiving water on site, becomes a point source discharging into that receiving water.

Permit: The authorization necessary to conduct a land-disturbing activity under the provisions of this article.

Person: Any individual, partnership, firm, association, joint venture, public or private corporation, trust, estate, commission, board, public or private institution, utility, cooperative, state agency, municipality or other political subdivision of the State of Georgia, any interstate body or any other legal entity.

Phase or *phased:* Sub-parts or segments of construction projects where the sub-part or segment is constructed and stabilized prior to completing construction activities on the entire construction site.

Project: The entire proposed development project regardless of the size of the area of land to be disturbed.

Properly designed: Designed in accordance with the design requirements and specifications contained in the "Manual for Erosion and Sediment Control in Georgia" (manual) published by the Georgia Soil and Water Conservation Commission as of January 1 of the year in which the land-disturbing activity was permitted and amendments to the Manual as approved by the Commission up until the date of NOI submittal.

Roadway drainage structure: A device such as a bridge, culvert, or ditch, composed of a virtually nonerodible material such as concrete, steel, plastic, or other such material that conveys water under a roadway by intercepting the flow on one side of a traveled roadway consisting of one or more defined lanes, with or without shoulder areas, and carrying water to a release point on the other side.

Sediment: Solid material, both organic and inorganic, that is in suspension, is being transported, or has been moved from its site of origin by wind, water, ice, or gravity as a product of erosion.

Sedimentation: The process by which eroded material is transported and deposited by the action of water, wind, ice or gravity.

Soil and water conservation district approved plan: An erosion, sedimentation and pollution control plan approved in writing by the Piedmont Soil and Water Conservation District.

Stabilization: The process of establishing an enduring soil cover of vegetation by the installation of temporary or permanent structures for the purpose of reducing to a minimum the erosion process and the resultant transport of sediment by wind, water, ice or gravity.

State general permit: The National Pollution Discharge Elimination System (NPDES) general permit or permits for stormwater runoff from construction activities as is now in

effect or as may be amended or reissued in the future pursuant to the state's authority to implement the same through federal delegation under the Federal Water Pollution Control Act, as amended, 33 U.S.C. Section 1251, et seq., and O.C.G.A. § 12-5-30(f).

State waters: Any and all rivers, streams, creeks, branches, lakes, reservoirs, ponds, drainage systems, springs, wells, and other bodies of surface or subsurface water, natural or artificial, lying within or forming a part of the boundaries of Georgia which are not entirely confined and retained completely upon the property of a single individual, partnership, or corporation.

Structural erosion, sedimentation and pollution control practices: Practices for the stabilization of erodible or sediment-producing areas by utilizing the mechanical properties of matter for the purpose of either changing the surface of the land or storing, regulating or disposing of runoff to prevent excessive sediment loss. Examples of structural erosion and sediment control practices are riprap, sediment basins, dikes, level spreaders, waterways or outlets, diversions, grade stabilization structures and sediment traps, etc. Such practices can be found in the publication Manual for Erosion and Sediment Control in Georgia.

Trout streams: All streams or portions of streams within the watershed as designated by the Wildlife Resources Division of the Georgia Department of Natural Resources under the provisions of the Georgia Water Quality Control Act, O.C.G.A. § 12-5-20, in the rules and regulations for Water Quality Control, Chapter 391-3-6 at www.epd.georgia.gov. Streams designated as primary trout waters are defined as water supporting a self- sustaining population of rainbow, brown or brook trout. Streams designated as secondary trout waters are those in which there is no evidence of natural trout reproduction, but are capable of supporting trout throughout the year. First order trout waters are streams into which no other streams flow except springs.

Vegetative erosion and sedimentation control measures: Measures for the stabilization of erodible or sediment-producing areas by covering the soil with:

a. Permanent seeding, sprigging or planting, producing long-term vegetative cover, or

b. Temporary seeding, producing short-term vegetative cover; or

c. Sodding, covering areas with a turf of perennial sod-forming grass.

Such measures can be found in the publication *Manual for Erosion and Sediment Control in Georgia*.

Watercourse: Any natural or artificial watercourse, stream, river, creek, channel, ditch, canal, conduit, culvert, drain, waterway, gully, ravine, or wash in which water flows either continuously or intermittently and which has a definite channel, bed and banks, and including any area adjacent thereto subject to inundation by reason of overflow or floodwater.

Wetlands: Those areas that are inundated or saturated by surface or ground water at a frequency and duration sufficient to support, and that under normal circumstances do support a prevalence of vegetation typically adapted for life in saturated soil conditions. Wetlands generally include swamps, marshes, bogs, and similar areas.
(Ord. No. 2010-07, 7-20-2010; Ord. No. 201801-1o, 1-16-2018)

Cross reference—Definitions generally, § 1-4.

Sec. 34-172. Exemptions.

This article shall apply to any land-disturbing activity undertaken by any person on any land except for the following

(1) Surface mining, as the same is defined in O.C.G.A. § 12-4-72, "The Georgia Surface Mining Act of 1968".

(2) Granite quarrying and land clearing for such quarrying;

(3) Such minor land-disturbing activities as home gardens and individual home landscaping, repairs, maintenance work, fences, and other related activities which result in minor soil erosion;

(4) The construction of single-family residences, when such construction disturbs less than one acre and is not a part of a larger common plan of development or sale with a planned disturbance of equal to or greater than one acre and not otherwise exempted under this paragraph; provided, however, that construction of any such residence shall conform to the minimum requirements as set forth in O.C.G.A. § 12-7-6 and this paragraph. For single-family residence construction covered by the provisions of this paragraph, there shall be a buffer zone between the residence and any state waters classified as trout streams pursuant to Article 2 of Chapter 5 of the Georgia Water Quality Control Act. In any such buffer zone, no land-disturbing activity shall be constructed between the residence and the point where vegetation has been wrested by normal stream flow or wave action from the banks of the trout waters. For primary trout waters, the buffer zone shall be at least 50 horizontal feet, and no variance to a smaller buffer shall be granted. For secondary trout waters, the buffer zone shall be at least 50 horizontal feet, but the director may grant variances to no less than 25 feet. Regardless of whether a trout stream is primary or secondary, for first order trout waters, which are streams into which no other streams flow except for springs, the buffer shall be at least 25 horizontal feet, and no variance to a smaller buffer shall be granted. The minimum requirements of O.C.G.A. § 12-7-6(b) and the buffer zones provided by this paragraph shall be enforced by the local issuing authority;

(5) Agricultural operations as defined in O.C.G.A. 1-3-3, "definitions", to include raising, harvesting or storing of products of the field or orchard; feeding, breeding or managing livestock or poultry; producing or storing feed for use in the production of livestock, including but not limited to cattle, calves, swine, hogs, goats, sheep, and rabbits or for use in the production of poultry, including but not limited to chickens,

hens and turkeys; producing plants, trees, fowl, or animals; the production of aqua culture, horticultural, dairy, livestock, poultry, eggs and apiarian products; farm buildings and farm ponds;

(6) Forestry land management practices, including harvesting; provided, however, that when such exempt forestry practices cause or result in land-disturbing or other activities otherwise prohibited in a buffer, as established in paragraphs (15) and (16) of section 34-233 of this article, no other land-disturbing activities, except for normal forest management practices, shall be allowed on the entire property upon which the forestry practices were conducted for a period of three years after completion of such forestry practices;

(7) Any project carried out under the technical supervision of the Natural Resources Conservation Service (NRCS) of the United States Department of Agriculture;

(8) Any project involving less than one acre of disturbed area; provided, however, that this exemption shall not apply to any land-disturbing activity within a larger common plan of development or sale with a planned disturbance of equal to or greater than one acre or within 200 feet of the bank of any state waters, and for purposes of this paragraph, "state waters" excludes channels and drainage ways which have water in them only during and immediately after rainfall events and intermittent streams which do not have water in them year-round; provided, however, that any person responsible for a project which involves less than one acre, which involves land-disturbing activity, and which is within 200 feet of any such excluded channel or drainage way, must prevent sediment from moving beyond the boundaries of the property on which such project is located and provided, further, that nothing contained herein shall prevent the local issuing authority from regulating any such project which is not specifically exempted by paragraphs 1, 2, 3, 4, 5, 6, 7, 9 or 10 of this section;

(9) Construction or maintenance projects, or both, undertaken or financed in whole or in part, or both, by the Department of Transportation, the Georgia Highway Authority, or the state road and tollway authority; or any road construction or maintenance project, or both, undertaken by any county or municipality; provided, however, that construction or maintenance projects of the Department of Transportation or the state road and tollway authority which disturb one or more contiguous acres of land shall be subject to provisions of O.C.G.A. § 12-7-7.1; except where the Department of Transportation, the Georgia Highway Authority, or the state road and tollway authority is a secondary permittee for a project located within a larger common plan of development or sale under the state general permit, in which case a copy of a notice of intent under the state general permit shall be submitted to the local issuing authority, the local issuing authority shall enforce compliance with the minimum requirements set forth in O.C.G.A. § 12-7-6 as if a permit had been issued, and violations shall be subject to the same penalties as violations by permit holders;

(10) Any land-disturbing activities conducted by any electric membership corporation or municipal electrical system or any public utility under the regulatory jurisdiction of the Public Service Commission, any utility under the regulatory jurisdiction of the Federal Energy Regulatory Commission, any cable television system as defined in O.C.G.A. § 36-18-1, or any agency or instrumentality of the United States engaged in the generation, transmission, or distribution of power; except where an electric membership corporation or municipal electrical system or any public utility under the regulatory jurisdiction of the Public Service Commission, any utility under the regulatory jurisdiction of the Federal Energy Regulatory Commission, any cable television system as defined in O.C.G.A. § 36-18-1, or any agency or instrumentality of the United states engaged in the generation, transmission, or distribution of power is a secondary permittee for a project located within a larger common plan of development or sale under the state general permit, in which case the local issuing authority shall enforce compliance with the minimum requirements set forth in O.C.G.A. § 12-7-6 as if a permit had been issued, and violations shall be subject to the same penalties as violations by permit holders; and

(11) Any public water system reservoir.

(Ord. No. 2010-07, 7-20-2010; Ord. No. 201801-1o, 1-16-2018)

Sec. 34-173. Inspection of permitted sites; notice to comply; failure.

The zoning director or other county employee designated by the zoning director will periodically inspect the sites of land-disturbing activities for which permits have been issued to determine if the activities are being conducted in accordance with the plan and if the measures required in the plan are effective in controlling erosion and sedimentation. Also, the local issuing authority shall regulate primary, secondary and tertiary permittees as such terms are defined in the state general permit. Primary permittees shall be responsible for installation and maintenance of best management practices where the primary permittee is conducting land-disturbing activities. Secondary permittees shall be responsible for installation and maintenance of best management practices where the secondary permittee is conducting land-disturbing activities. Tertiary permittees shall be responsible for installation and maintenance where the tertiary permittee is conducting land-disturbing activities. If, through inspection, it is deemed that a person engaged in land-disturbing activities as defined herein has failed to comply with the approved plan, with permit conditions, or with the provisions of this article, a written notice to comply shall be served upon that person. The notice shall set forth the measures necessary to achieve compliance and shall state the time within which such measures must be completed. If the person engaged in the land-disturbing activity fails to comply within the time specified, he shall be deemed in violation of this article.

(Ord. No. 2010-07, 7-20-2010; Ord. No. 201801-1o, 1-16-2018)

Sec. 34-174. Right of zoning director to enter upon public or private property.

The zoning director or other county employee designated by the zoning director shall have the power to conduct such investigations as it may reasonably deem necessary to carry out

duties as prescribed in this article, and for this purpose to enter at reasonable times upon any property, public or private, for the purpose of investigation and inspecting the sites of land-disturbing activities.
(Ord. No. 2010-07, 7-20-2010; Ord. No. 201801-1o, 1-16-2018)

Sec. 34-175. Refusal or obstruction of access to property by inspectors.

No person shall refuse entry or access to any authorized representative or agent of the local issuing authority, the commission, the district, or division who requests entry for the purposes of inspection, and who presents appropriate credentials, nor shall any person obstruct, hamper or interfere with any such representative while in the process of carrying out his official duties.
(Ord. No. 2010-07, 7-20-2010; Ord. No. 201801-1o, 1-16-2018)

Sec. 34-176. Review of issuing authority's actions; deadline for corrective action.

The district or the commission or both shall semi-annually review the actions of counties and municipalities which have been certified as local issuing authorities pursuant to O.C.G.A. § 12-7-8(a). The district or the commission or both may provide technical assistance to any county or municipality for the purpose of improving the effectiveness of the county's or municipality's erosion, sedimentation and pollution control program. The district or the commission shall notify the division and request investigation by the division if any deficient or ineffective local program is found. The division may periodically review the actions of counties and municipalities which have been certified as local issuing authorities pursuant to O.C.G.A. § 12-7-8(a). Such review may include, but shall not be limited to, review of the administration and enforcement of a governing authority's ordinance and review of conformance with an agreement, if any, between the district and the governing authority. If such review indicates that the governing authority of any county or municipality certified pursuant to O.C.G.A. § 12-7-8(a) has not administered or enforced its ordinances or has not conducted the program in accordance with any agreement entered into pursuant to O.C.G.A. § 12-7-7(e), the division shall notify the governing authority of the county or municipality in writing. The governing authority of any county or municipality so notified shall have 90 days within which to take the necessary corrective action to retain certification as a local issuing authority. If the county or municipality does not take necessary corrective action within 90 days after notification by the division, the division shall revoke the certification of the county or municipality as a local issuing authority.
(Ord. No. 2010-07, 7-20-2010; Ord. No. 201801-1o, 1-16-2018)

Sec. 34-177. Failure to obtain a permit for land-disturbing activity.

If any person commences any land-disturbing activity requiring a land-disturbing permit as prescribed in this article without first obtaining said permit, the person shall be subject

to revocation of his business license, work permit or other authorization for the conduct of a business and associated work activities within the jurisdictional boundaries of the local issuing authority.
(Ord. No. 2010-07, 7-20-2010; Ord. No. 201801-1o, 1-16-2018)

Sec. 34-178. Stop work orders.

(a) For the first and second violations of the provisions of this article, the director or the local issuing authority shall issue a written warning to the violator. The violator shall have five days to correct the violation. If the violation is not corrected within five days, the director or the local issuing authority shall issue a stop-work order requiring that land-disturbing activities be stopped until necessary corrective action or mitigation has occurred; provided, however, that, if the violation presents an imminent threat to public health or waters of the state or if the land-disturbing activities are conducted without obtaining the necessary permit, the director or the local issuing authority shall issue an immediate stop-work order in lieu of a warning;

(b) For a third and each subsequent violation, the director or the local issuing authority shall issue an immediate stop-work order; and

(c) All stop-work orders shall be effective immediately upon issuance and shall be in effect until the necessary corrective action or mitigation has occurred.

(d) When a violation in the form of taking action without a permit, failure to maintain a stream buffer, or significant amounts of sediment, as determined by the local issuing authority or by the director or his or her designee, have been or are being discharged into state waters and where best management practices have not been properly designed, installed, and maintained, a stop work order shall be issued by the local issuing authority or by the director or his or her designee. All such stop work orders shall be effective immediately upon issuance and shall be in effect until the necessary corrective action or mitigation has occurred. Such stop work orders shall apply to all land-disturbing activity on the site with the exception of the installation and maintenance of temporary or permanent erosion and sediment controls.
(Ord. No. 2010-07, 7-20-2010; Ord. No. 201801-1o, 1-16-2018)

Sec. 34-179. Bond forfeiture.

If, through inspection, it is determined that a person engaged in land-disturbing activities has failed to comply with the approved plan, a written notice to comply shall be served upon that person. The notice shall set forth the measures necessary to achieve compliance with the plan and shall state the time within which such measures must be completed. If the person engaged in the land-disturbing activity fails to comply within the time specified, he shall be deemed in violation of this article and, in addition to other penalties, shall be deemed to have forfeited his performance bond, if required to post one under the provisions

of subsection 34-202(g). The local issuing authority may call the bond or any part thereof to be forfeited and may use the proceeds to hire a contractor to stabilize the site of the land-disturbing activity and bring it into compliance.
(Ord. No. 2010-07, 7-20-2010; Ord. No. 201801-1o, 1-16-2018)

Sec. 34-180. Monetary penalties.

Any person who violates any provisions of this article, or any permit condition or limitation established pursuant to this article, or who negligently or intentionally fails or refuses to comply with any final or emergency order of the director issued as provided in this article shall be liable for a civil penalty not to exceed $2,500.00 per day. For the purpose of enforcing the provisions of this article, notwithstanding any provisions in any City Charter to the contrary, municipal courts shall be authorized to impose penalty not to exceed $2,500.00 for each violation. Notwithstanding any limitation of law as to penalties which can be assessed for violations of county ordinances, any magistrate court or any other court of competent jurisdiction trying cases brought as violations of this article under county ordinances approved under this article shall be authorized to impose penalties for such violations not to exceed $2,500.00 for each violation. Each day during which violation or failure or refusal to comply continues shall be a separate violation.
(Ord. No. 2010-07, 7-20-2010; Ord. No. 201801-1o, 1-16-2018)

Sec. 34-181. Administrative remedies.

The suspension, revocation, modification or grant with condition of a permit by the local issuing authority upon finding that the holder is not in compliance with the approved erosion, sediment and pollution control plan; or that the holder is in violation of permit conditions; or that the holder is in violation of any article; shall entitle the person submitting the plan or holding the permit to a hearing before the Jones County Board of Commissioners within 30 days after receipt by the local issuing authority of written notice of appeal.
(Ord. No. 2010-07, 7-20-2010; Ord. No. 201801-1o, 1-16-2018)

Sec. 34-182. Judicial review.

Any person, aggrieved by a decision or order of the local issuing authority, after exhausting his administrative remedies, shall have the right to appeal denovo to the Superior Court of Jones County.
(Ord. No. 2010-07, 7-20-2010; Ord. No. 201801-1o, 1-16-2018)

Sec. 34-183. Liability.

(a) Neither the approval of a plan under the provisions of this article, nor the compliance with provisions of this article shall relieve any person from the responsibility for damage to any person or property otherwise imposed by law nor impose any liability upon the local issuing authority or district for damage to any person or property.

(b) The fact that a land-disturbing activity for which a permit has been issued results in injury to the property of another shall neither constitute proof of nor create a presumption of a violation of the standards provided for in this article or the terms of the permit.

(c) No provision of this article shall permit any persons to violate the Georgia Erosion and Sedimentation Act of 1975, the Georgia Water Quality Control Act or the rules and regulations promulgated and approved thereunder or pollute any waters of the state as defined thereby.
(Ord. No. 2010-07, 7-20-2010; Ord. No. 201801-1o, 1-16-2018)

Sec. 34-184. Title.

This article will be known as "The Jones County Soil Erosion, Sedimentation and Pollution Control Ordinance."
(Ord. No. 2010-07, 7-20-2010; Ord. No. 201801-1o, 1-16-2018)

Sec. 34-185. Requirement to amend.

The local issuing authority must amend its ordinances to the extent appropriate within 12 months of any amendments to the Erosion and Sedimentation Act of 1975.
(Ord. No. 2010-07, 7-20-2010; Ord. No. 201801-1o, 1-16-2018)

Secs. 34-186—34-200. Reserved.

DIVISION 2. PERMIT PROCEDURES

Sec. 34-201. Review of ordinances regulating land development by applicant.

The property owner, developer and designated planners and engineers shall design and review before submittal the general development plans. The local issuing authority shall review the tract to be developed and the area surrounding it. They shall consult the zoning ordinance, stormwater management ordinance, subdivision ordinance, flood damage prevention ordinance, this article, and any other ordinances, rules, regulations or permits, which regulate the development of land within the jurisdictional boundaries of the local issuing authority. However, the owner and/or operator are the only parties who may obtain a permit.
(Ord. No. 2010-07, 7-20-2010; Ord. No. 201801-1o, 1-16-2018)

Sec. 34-202. Application requirements.

(a) No person shall conduct any land-disturbing activity within the jurisdictional boundaries of Jones County without first obtaining a permit from the zoning director to perform such activity and providing a copy of notice of intent submitted to EPD if applicable.

(b) The application for a permit shall be submitted to the zoning director and must include the applicant's erosion, sedimentation and pollution control plan with supporting data, as necessary. Said plans shall include, as a minimum, the data specified in section 34-203 of this article. Erosion, sedimentation and pollution control plans, together with

supporting data, must demonstrate affirmatively that the land disturbing activity proposed will be carried out in such a manner that the provisions of section 34-232 and 34-233 of this article will be met. Applications for a permit will not be accepted unless accompanied by two copies of the applicant's erosion, sedimentation and pollution control plans. All applications shall contain a certification stating that the plan preparer or the designee thereof visited the site prior to creation of the plan in accordance with EPD Rule 391-3-7-.10.

(c) A fee, as set forth in the building fee schedule adopted by the board of commissioners shall be charged for each acre or fraction thereof in the project area.

(d) In addition to the local permitting fees, fees will also be assessed pursuant to O.C.G.A. 12-5-23(a)(5), provided that such fees shall not exceed $80.00 per acre of land-disturbing activity, and these fees shall be calculated and paid by the primary permittee as defined in the state general permit for each acre of land-disturbing activity included in the planned development or each phase of development. All applicable fees shall be paid prior to issuance of the land disturbance permit. In a jurisdiction that is certified pursuant to O.C.G.A. 12-7-8(a) half of such fees levied shall be submitted to the Division; except that any and all fees due from an entity which is required to give notice pursuant to paragraph (9) or (10) of O.C.G.A. 12-7-17 shall be submitted in full to the division, regardless of the existence of a local issuing authority in the jurisdiction.

(e) Immediately upon receipt of an application and plan for a permit, the local issuing authority shall refer the application and plan to the district for its review and approval or disapproval concerning the adequacy of the erosion, sedimentation and pollution control plan. The district shall approve or disapprove a plan within 35 days of receipt. Failure of the district to act within 35 days shall be considered an approval of the pending plan. The results of the district review shall be forwarded to the local issuing authority. No permit will be issued unless the plan has been approved by the district, and any variances required by subsections 34-233(25) and (16) have been obtained, all fees have been paid, and bonding, if required as per subsection 34-202(g), have been obtained. Such review will not be required if the local issuing authority and the district have entered into an agreement which allows the local issuing authority to conduct such review and approval of the plan without referring the application and plan to the district. The local issuing authority with plan review authority shall approve or disapprove a revised plan submittal within 35 days of receipt. Failure of the local issuing authority with plan review authority to act within 35 days shall be considered an approval of the revised plan submittal.

(f) If a permit applicant has had two or more violations of previous permits, this article section, or the Erosion and Sedimentation Act, as amended, within three years prior to the date of filing the application under consideration, the local issuing authority may deny the permit application.

(g) The local issuing authority may require the permit applicant to post a bond in the form of government security, cash, irrevocable letter of credit, or any combination thereof up to, but not exceeding, $3,000.00 per acre or fraction thereof of the proposed land-disturbing activity, prior to issuing the permit. If the applicant does not comply with this section or with

the conditions of the permit after issuance, the local issuing authority may call the bond or any part thereof to be forfeited and may use the proceeds to hire a contractor to stabilize the site of the land-disturbing activity and bring it into compliance. These provisions shall not apply unless there is in effect an ordinance or statute specifically providing for hearing and judicial review of any determination or order of the local issuing authority with respect to alleged permit violations.
(Ord. No. 2010-07, 7-20-2010; Ord. No. 201801-1o, 1-16-2018)

Sec. 34-203. Plan requirements.

(a) Plans must be prepared to meet the minimum requirements as contained in section 34-232 and 34-233 of this article, or through the use of more stringent, alternate design criteria which conform to sound conservation and engineering practices. The Manual for Erosion and Sediment Control in Georgia is hereby incorporated by reference into this article. The plan for the land-disturbing activity shall consider the interrelationship of the soil types, geological and hydrological characteristics, topography, watershed, vegetation, proposed permanent structures including roadways, constructed waterways, sediment control and stormwater management facilities, local ordinances and State laws. Maps, drawings and supportive computations shall bear the signature and seal of the certified design professional. Persons involved in land development design, review, permitting, construction, monitoring, or inspections or any land disturbing activity shall meet the education and training certification requirements, dependent on his or her level of involvement with the process, as developed by the commission and in consultation with the division and the stakeholder advisory board created pursuant to O.C.G.A. § 12-7-20.

(b) Data required for site plan shall include all the information required from the appropriate erosion, sedimentation and pollution control plan review checklist established by the commission as of January 1 of the year in which the land-disturbing activity was permitted.
(Ord. No. 2010-07, 7-20-2010; Ord. No. 201801-1o, 1-16-2018)

Sec. 34-204. Issuance, denial of permits.

Permits shall be issued or denied as soon as practicable but in any event not later than 45 days after receipt by the local issuing authority of a completed application, providing variances and bonding are obtained, where necessary and all applicable fees have been paid prior to permit issuance. The permit shall include conditions under which the activity may be undertaken.
(Ord. No. 2010-07, 7-20-2010; Ord. No. 201801-1o, 1-16-2018)

Sec. 34-205. Approval of plan prior to issuance.

(a) No permit shall be issued by the local issuing authority unless the erosion, sedimentation and pollution control plan has been approved by the district and the local issuing authority has affirmatively determined that the plan is in compliance with this article, any variances required by division 3 are obtained, bonding requirements, if

necessary, as per subsection 34-202(e) are met and all ordinances and rules and regulations in effect within the jurisdictional boundaries of the local issuing authority are met. If the permit is denied, the reason for denial shall be furnished to the applicant.

(b) Any land-disturbing activities by a local issuing authority shall be subject to the same requirements of this article, and any other ordinances relating to land development, as are applied to private persons and the division shall enforce such requirements upon the local issuing authority.
(Ord. No. 2010-07, 7-20-2010; Ord. No. 201801-1o, 1-16-2018)

Sec. 34-206. Phased development; separate permits.

If the tract is to be developed in phases, then a separate permit shall be required for each phase.
(Ord. No. 2010-07, 7-20-2010; Ord. No. 201801-1o, 1-16-2018)

Sec. 34-207. Suspension, revocation, rejection or modification.

(a) The permit may be suspended, revoked, or modified by the local issuing authority, as to all or any portion of the land affected by the plan, upon finding that the holder or his successor in the title is not in compliance with the approved erosion and sedimentation control plan or that the holder or his successor in title is in violation of this article. A holder of a permit shall notify any successor in title to him as to all or any portion of the land affected by the approved plan of the conditions contained in the permit.

(b) The LIA may reject a permit application if the applicant has had two or more violations of previous permits or the Erosion and Sedimentation Act permit requirements within three years prior to the date of the application, in light of O.C.G.A. § 12-7-7(f)(1).
(Ord. No. 2010-07, 7-20-2010; Ord. No. 201801-1o, 1-16-2018)

Sec. 34-208. Reserved.

Sec. 34-209. Injury of permit holder to property of another.

The fact that land-disturbing activity for which a permit has been issued results in injury to the property of another shall neither constitute proof of nor create a presumption of a violation of the standards provided for in this article or the terms of the permit.
(Ord. No. 2010-07, 7-20-2010; Ord. No. 201801-1o, 1-16-2018)

Sec. 34-210. Education and certification.

(a) Persons involved in land development design, review, permitting, construction, monitoring, or inspection or any land-disturbing activity shall meet the education and training certification requirements, dependent on their level of involvement with the process, as developed by the commission in consultation with the division and the stakeholder advisory board created pursuant to O.C.G.A. § 12-7-20.

(b) For each site on which land-disturbing activity occurs, each entity or person acting as either a primary, secondary, or tertiary permittee, as defined in the state general permit, shall have as a minimum one person who is in responsible charge of erosion and sedimentation control activities on behalf of said entity or person and meets the applicable education or training certification requirements developed by the commission present on site whenever land-disturbing activities are conducted on that site. A project site shall herein be defined as any land-disturbance site or multiple sites within a larger common plan of development or sale permitted by an owner or operator for compliance with the state general permit.

(c) Persons or entities involved in projects not requiring a state general permit but otherwise requiring certified personnel on site may contract with certified persons to meet the requirements of this article.

(d) If a state general permittee who has operational control of land-disturbing activities for a site has met the certification requirements of O.C.G.A. § 12-7-19(b)(1), then any person or entity involved in land-disturbing activity at that site and operating in a subcontractor capacity for such permittee shall meet those educational requirements specified in O.C.G.A § 12-7-19(b)(4) and shall not be required to meet any educational requirements that exceed those specified in said paragraph.
(Ord. No. 2010-07, 7-20-2010; Ord. No. 201801-1o, 1-16-2018)

Secs. 34-211—34-230. Reserved.

DIVISION 3. MINIMUM REQUIREMENTS

Sec. 34-231. Plans to contain control measures and practices; application and installation.

Excessive soil erosion and resulting sedimentation can take place during land-disturbing activities if requirements of the article and the NPDES general permit are not met. Therefore, plans for those land-disturbing activities which are not exempted by this article shall contain provisions for application of soil erosion, sedimentation and pollution control measures and practices. The provisions shall be incorporated into the erosion, sedimentation and pollution control plans. Soil erosion, sedimentation and pollution control measures and practices shall conform to the minimum requirements of sections 34-232 and 34-233 of this article. The application of measures and practices shall apply to all features of the site, including street and utility installations, drainage facilities and other temporary and permanent improvements. Measures shall be installed to prevent or control erosion, sedimentation and pollution during all stages of any land-disturbing activity in accordance with requirements of this article and the NPDES general permit.
(Ord. No. 2010-07, 7-20-2010; Ord. No. 201801-1o, 1-16-2018)

Sec. 34-232. Best management practices.

(a) Best management practices as set forth in section 34-232 and 34-233 of this article shall be required for all land-disturbing activities. Proper design, installation, and maintenance of best management practices shall constitute a complete defense to any action by the director or to any other allegation of noncompliance with paragraph (2) of this subsection or any substantially similar terms contained in a permit for the discharge of stormwater issued pursuant to O.C.G.A. § 12-5-30(f), the "Georgia Water Quality Control Act". As used in this subsection the terms "proper design" and "properly designed" mean designed in accordance with the hydraulic design specifications contained in the "Manual for Erosion and Sediment Control in Georgia" specified in O.C.G.A. § 12-7-6(b).

(b) A discharge of stormwater runoff from disturbed areas where best management practices have not been properly designed, installed, and maintained shall constitute a separate violation of any land-disturbing permit issued by a local issuing authority or of any state general permit issued by the division pursuant to O.C.G.A. § 12-5-30(f), the "Georgia Water Quality Control Act", for each day on which such discharge results in the turbidity of receiving waters being increased by more than 25 nephelometric turbidity units for waters supporting warm water fisheries or by more than ten nephelometric turbidity units for waters classified as trout waters. The turbidity of the receiving waters shall be measured in accordance with guidelines to be issued by the director. This paragraph shall not apply to any land disturbance associated with the construction of single family homes which are not part of a larger common plan of development or sale unless the planned disturbance for such construction is equal to or greater than five acres.

(c) Failure to properly design, install, or maintain best management practices shall constitute a violation of any land-disturbing permit issued by a local issuing authority or of any state general permit issued by the division pursuant to O.C.G.A. § 12-5-30(f), the "Georgia Water Quality Control Act", for each day on which such failure occurs.

(d) The director may require, in accordance with regulations adopted by the board, reasonable and prudent monitoring of the turbidity level of receiving waters into which discharges from land disturbing activities occur.

(e) The LIA may set more stringent buffer requirements than stated in subsections 34-233(15) and (16), in light of O.C.G.A. § 12-7-6(c).
(Ord. No. 2010-07, 7-20-2010; Ord. No. 201801-1o, 1-16-2018)

Sec. 34-233. Conservation and engineering practices.

The rules and regulations, ordinances, or resolutions adopted pursuant to O.C.G.A. § 12-7-1 et. seq. for the purpose of governing land-disturbing activities shall require, as a minimum, protections at least as stringent as the state general permit; and best management practices, including sound conservation and engineering practices to prevent and minimize erosion and resultant sedimentation, which are consistent with, and no less

stringent than, those practices contained in the Manual for Erosion and Sediment Control in Georgia published by the Georgia Soil and Water Conservation Commission as of January 1 of the year in which the land-disturbing activity was permitted, as well as the following:

(1) Stripping of vegetation, regrading and other development activities shall be conducted in a manner so as to minimize erosion;

(2) Cut-fill operations must be kept to a minimum;

(3) Development plans must conform to topography and soil type so as to create the lowest practicable erosion potential;

(4) Whenever feasible, natural vegetation shall be retained, protected and supplemented;

(5) The disturbed area and the duration of exposure to erosive elements shall be kept to a practicable minimum;

(6) Disturbed soil shall be stabilized as quickly as practicable;

(7) Temporary vegetation or mulching shall be employed to protect exposed critical areas during development;

(8) Permanent vegetation and structural erosion control practices shall be installed as soon as practicable;

(9) To the extent necessary, sediment in run-off water must be trapped by the use of debris basins, sediment basins, silt traps, or similar measures until the disturbed area is stabilized. As used in this paragraph, a disturbed area is stabilized when it is brought to a condition of continuous compliance with the requirements of O.C.G.A. § 12-7-1 et. seq.;

(10) Adequate provisions must be provided to minimize damage from surface water to the cut face of excavations or the sloping of fills;

(11) Cuts and fills may not endanger adjoining property;

(12) Fills may not encroach upon natural watercourses or constructed channels in a manner so as to adversely affect other property owners;

(13) Grading equipment must cross flowing streams by means of bridges or culverts except when such methods are not feasible, provided, in any case, that such crossings are kept to a minimum;

(14) Land-disturbing activity plans for erosion, sedimentation and pollution control shall include provisions for treatment or control of any source of sediments and adequate sedimentation control facilities to retain sediments on-site or preclude sedimentation of adjacent waters beyond the levels specified in subsection 34-232(b) of this article;

(15) Except as provided in paragraph (16) and (17) of this subsection, there is established a 25 foot buffer along the banks of all state waters, as measured horizontally from the point where vegetation has been wrested by normal stream flow or wave action, except where the director determines to allow a variance that is at least as protective

of natural resources and the environment, where otherwise allowed by the director pursuant to O.C.G.A. § 12-2-8, where a drainage structure or a roadway drainage structure must be constructed, provided that adequate erosion control measures are incorporated in the project plans and specifications, and are implemented; or where bulkheads and sea walls are installed to prevent shoreline erosion on Lake Oconee and Lake Sinclair; or along any ephemeral stream. As used in this provision, the term 'ephemeral stream' means a stream: that under normal circumstances has water flowing only during and for a short duration after precipitation events; that has the channel located above the ground-water table year round; for which ground water is not a source of water; and for which runoff from precipitation is the primary source of water flow, unless exempted as along an ephemeral stream, the buffers of at least 25 feet established pursuant to part 6 of Article 5, Chapter 5 of Title 12, the "Georgia Water Quality Control Act", shall remain in force unless a variance is granted by the director as provided in this paragraph. The following requirements shall apply to any such buffer:

a. No land-disturbing activities shall be conducted within a buffer and a buffer shall remain in its natural, undisturbed state of vegetation until all land-disturbing activities on the construction site are completed. Once the final stabilization of the site is achieved, a buffer may be thinned or trimmed of vegetation as long as a protective vegetative cover remains to protect water quality and aquatic habitat and a natural canopy is left in sufficient quantity to keep shade on the stream bed; provided, however, that any person constructing a single-family residence, when such residence is constructed by or under contract with the owner for his or her own occupancy, may thin or trim vegetation in a buffer at any time as long as protective vegetative cover remains to protect water quality and aquatic habitat and a natural canopy is left in sufficient quantity to keep shade on the stream bed; and

b. The buffer shall not apply to the following land-disturbing activities, provided that they occur at an angle, as measured from the point of crossing, within 25 degrees of perpendicular to the stream; cause a width of disturbance of not more than 50 feet within the buffer; and adequate erosion control measures are incorporated into the project plans and specifications and are implemented: (i) Stream crossings for water lines; or (ii) Stream crossings for sewer lines; and

(16) There is established a 50 foot buffer as measured horizontally from the point where vegetation has been wrested by normal stream flow or wave action, along the banks of any state waters classified as "trout streams" pursuant to Article 2 of Chapter 5 of Title 12, the "Georgia Water Quality Control Act", except where a roadway drainage structure must be constructed; provided, however, that small springs and streams classified as trout streams which discharge an average annual flow of 25 gallons per minute or less shall have a 25 foot buffer or they may be piped, at the discretion of the landowner, pursuant to the terms of a rule providing for a general variance promulgated by the board, so long as any such pipe stops short of the downstream

landowner's property and the landowner complies with the buffer requirement for any adjacent trout streams. The director may grant a variance from such buffer to allow land-disturbing activity, provided that adequate erosion control measures are incorporated in the project plans and specifications and are implemented. The following requirements shall apply to such buffer:

a. No land-disturbing activities shall be conducted within a buffer and a buffer shall remain in its natural, undisturbed, state of vegetation until all land-disturbing activities on the construction site are completed. Once the final stabilization of the site is achieved, a buffer may be thinned or trimmed of vegetation as long as a protective vegetative cover remains to protect water quality and aquatic habitat and a natural canopy is left in sufficient quantity to keep shade on the stream bed: provided, however, that any person constructing a single-family residence, when such residence is constructed by or under contract with the owner for his or her own occupancy, may thin or trim vegetation in a buffer at any time as long as protective vegetative cover remains to protect water quality and aquatic habitat and a natural canopy is left in sufficient quantity to keep shade on the stream bed; and

b. The buffer shall not apply to the following land-disturbing activities, provided that they occur at an angle, as measured from the point of crossing, within 25 degrees of perpendicular to the stream; cause a width of disturbance of not more than 50 feet within the buffer; and adequate erosion control measures are incorporated into the project plans and specifications and are implemented: (i) Stream crossings for water lines; or (ii) Stream crossings for sewer lines; and

(17) There is established a 25 foot buffer along coastal marshlands, as measured horizontally from the coastal marshland-upland interface, as determined in accordance with Chapter 5 of Title 12 of this title, the "Coastal Marshlands Protection Act of 1970." And the rules and regulations promulgated thereunder, except where the director determines to allow a variance that is at least as protective of natural resources and the environment, where otherwise allowed by the director pursuant to Code section 12-2-8, where an alteration within the buffer area has been authorized pursuant to Code section 12-5-286, for maintenance of any currently serviceable structure, landscaping, or hardscaping, including bridges, roads, parking lots, golf courses, golf cart paths, retaining walls, bulkheads, and patios; provided, however, that if such maintenance requires any land-disturbing activity, adequate erosion control measures are incorporated into the project plans and specifications and such measures are fully implemented, where a drainage structure or roadway drainage structure is constructed or maintained; provided, however, that if such maintenance requires any land-disturbing activity, adequate erosion control measures are incorporated into the project plans and specifications and such measures are fully implemented, on the landward side of any currently serviceable shoreline stabilization structure, or for the maintenance of any manmade stormwater detention basin, golf course pond, or impoundment that is located entirely within the property of a

single individual, partnership, or corporation; provided, however, that adequate erosion control measures are incorporated into the project plans and specifications and such measures are fully implemented. For the purposes of this paragraph maintenance shall be defined as actions necessary or appropriate for retaining or restoring a currently serviceable improvement to the specified operable condition to achieve its maximum useful life. Maintenance includes emergency reconstruction of recently damaged parts of a currently serviceable structure so long as it occurs within a reasonable period of time after damage occurs. Maintenance does not include any modification that changes the character, scope or size of the original design and serviceable shall be defined as usable in its current state or with minor maintenance but not so degraded as to essentially require reconstruction.

a. No land-disturbing activities shall be conducted within a buffer and a buffer shall remain in its natural, undisturbed, state of vegetation until all land-disturbing activities on the construction site are completed. Once the final stabilization of the site is achieved, a buffer may be thinned or trimmed of vegetation as long as a protective vegetative cover remains to protect water quality and aquatic habitat; provided, however, that any person constructing a single-family residence, when such residence is constructed by or under contract with the owner for his or her own occupancy, may thin or trim vegetation in a buffer at any time as long as protective vegetative cover remains to protect water quality and aquatic habitat; and

b. The buffer shall not apply to crossings for utility lines that cause a width of disturbance of not more than 50 feet within the buffer, provided, however, that adequate erosion control measures are incorporated into the project plans and specifications and such measures are fully implemented.

c. The buffer shall not apply to any land-disturbing activity conducted pursuant to and in compliance with a valid and effective land-disturbing permit issued subsequent to April 22, 2014, and prior to December 31, 2015; provided, however, that adequate erosion control measures are incorporated into the project plans and specifications and such measures are fully implemented or any lot for which the preliminary plat has been approved prior to December 31, 2015 if roadways, bridges, or water and sewer lines have been extended to such lot prior to the effective date of this Act and if the requirement to maintain a 25 foot buffer would consume at least 18 percent of the high ground of the platted lot otherwise available for development; provided, however, that adequate erosion control measures are incorporated into the project plans and specifications and such measures are fully implemented.

d. Activities where the area within the buffer is not more than 500 square feet or that have a "MINOR BUFFER IMPACT" as defined in 391-3-7-.01(r), provided that the total area of buffer impacts is less than 5,000 square feet are deemed to have an approved buffer variance by rule. Bank stabilization structures are

not eligible for coverage under the variance by rule and notification shall be made to the division at least 14 days prior to the commencement of land disturbing activities.

(Ord. No. 2010-07, 7-20-2010; Ord. No. 201801-1o, 1-16-2018)

Sec. 34-234. Adoption of requirements exceeding division standards.

Nothing contained in O.C.G.A. § 12-7-1 et. seq. shall prevent any local issuing authority from adopting rules and regulations, ordinances, or resolutions which contain stream buffer requirements that exceed the minimum requirements in sections 34-232 and 34-233 of this article.

(Ord. No. 2010-07, 7-20-2010; Ord. No. 201801-1o, 1-16-2018)

Sec. 34-235. Effectivity.

This article shall become effective on the second day of January, 2018.

(Ord. No. 2010-07, 7-20-2010; Ord. No. 201801-1o, 1-16-2018)

Sec. 34-236. Validity.

If any section, paragraph, clause, phrase, or provision of this article shall be adjudged invalid or held unconstitutional, such decisions shall not affect the remaining portions of this article.

(Ord. No. 2010-07, 7-20-2010; Ord. No. 201801-1o, 1-16-2018)

Chapters 35—37

RESERVED

Chapter 38

FIRE PREVENTION AND PROTECTION*

Article I. In General

Secs. 38-1—38-30. Reserved.

Article II. Volunteer Fire Department

Sec. 38-31. Established.
Sec. 38-32. Funding, budget.
Sec. 38-33. Immunity of volunteers, benefits.
Sec. 38-34. Districts; personnel.
Sec. 38-35. Rules, regulations.

***Cross references—**Buildings, construction and related activities, ch. 18; civil emergencies, ch. 26; emergency services, ch. 30.

State law references—Regulation of fire and other hazards to persons and property generally, O.C.G.A. § 25-2-1 et seq.; statewide application of Standard Fire Prevention Code, O.C.G.A. § 8-2-25(a); authority to provide police and fire protection, Ga. Const. art. IX, § II, ¶ III(a)(1).

ARTICLE I. IN GENERAL

Secs. 38-1—38-30. Reserved.

ARTICLE II. VOLUNTEER FIRE DEPARTMENT*

Sec. 38-31. Established.

The county shall have a county-wide volunteer fire department. Such department shall be operated as a part of the county emergency management agency and supervised by the emergency management agency, as the county fire chief.
(Res. of 7-1-1980)

Sec. 38-32. Funding, budget.

The county volunteer fire department shall be financed with county funds, along with state and federal grants that may be available, and a budget shall be submitted to the board of commissioners each year.
(Res. of 7-1-1980)

Sec. 38-33. Immunity of volunteers, benefits.

All registered and trained members of the volunteer fire department shall have the same immunities as officers and employees of the county and shall be covered by workman's compensation and other insurance benefits as may be available from state and federal agencies.
(Res. of 7-1-1980)

Sec. 38-34. Districts; personnel.

The county shall be divided into several districts for the purpose of localized fire department service areas; and each district shall have a district chief and line officers of captain and lieutenant.
(Res. of 7-1-1980)

Sec. 38-35. Rules, regulations.

All volunteers shall adhere to the rules and regulations of the county volunteer fire department.
(Res. of 7-1-1980)

***State law references—**Georgia Firefighter Standards and Training Act, O.C.G.A. § 25-4-1 et seq.; local fire departments generally, O.C.G.A. § 25-3-1 et seq.

Chapters 39—41

RESERVED

Chapter 42

FLOODS*

Article I. In General

Secs. 42-1—42-30. Reserved.

Article II. Flood Damage Prevention

Division 1. Generally

Sec. 42-31. Definitions.
Sec. 42-32. Lands to which article applies.
Sec. 42-33. Basis for establishing areas of special flood hazard.
Sec. 42-34. Establishment of development permit.
Sec. 42-35. Compliance with article.
Sec. 42-36. Abrogation and greater restrictions.
Sec. 42-37. Interpretation.
Sec. 42-38. Warning and disclaimer of liability.
Sec. 42-39. Penalty for violation of article.
Sec. 42-40. Statutory authorization.
Sec. 42-41. Findings of fact.
Sec. 42-42. Statement of purpose.
Sec. 42-43. Objectives.
Secs. 42-44—42-65. Reserved.

Division 2. Administration

Sec. 42-66. Local administrator—Designated.
Sec. 42-67. Duties and responsibilities of the administrator.
Sec. 42-68. Permit procedures.
Sec. 42-69. Variance procedures.
Sec. 42-70. Conditions for variances.
Secs. 42-71—42-90. Reserved.

Division 3. Provisions for Flood Hazard Reduction

Sec. 42-91. General standards.
Sec. 42-92. Elevated buildings.

***Editor's note—**Ord. No. 200904-3o, adopted Apr. 21, 2009, amended ch. 42 in its entirety to read as herein set out. Former ch. 42 pertained to the same subject matter, consisted of §§ 42-31—42-43, 42-66—42-70, 42-91—42-105, and derived from an ordinance adopted Mar. 4, 1997.

Cross references—Buildings, construction and related activities, ch. 18; environment, ch. 34; health and sanitation, ch. 46; roads, ch. 58; water and sewers, ch. 74; comprehensive land development, app. A.

State law reference—Construction and operation of watershed and flood control projects by counties, O.C.G.A. § 22-3-100 et seq.

Sec. 42-93. Technical, construction equipment.
Sec. 42-94. Manufactured homes.
Sec. 42-95. Water supply systems.
Sec. 42-96. Sanitary sewage systems.
Sec. 42-97. Waste disposal systems.
Sec. 42-98. Nonconforming repairs, etc.
Sec. 42-99. New construction and/or substantial improvements.
Sec. 42-100. Nonresidential construction.
Sec. 42-101. Standards for manufactured homes and recreational vehicles.
Sec. 42-102. Floodway.
Sec. 42-103. Building standards for streams without established base flood elevations and/or floodway.
Sec. 42-104. Standards for areas of shallow flooding (AO zones).
Sec. 42-105 Standards for areas of flood hazard (zones AE) with established base flood elevation without designated floodways.
Sec. 42-106. Standards for subdivisions.
Sec. 42-107. Standards for critical facilities.

ARTICLE I. IN GENERAL

Secs. 42-1—42-30. Reserved.

ARTICLE II. FLOOD DAMAGE PREVENTION

DIVISION 1. GENERALLY

Sec. 42-31. Definitions.

Unless specifically defined below, words or phrases used in this chapter shall be interpreted so as to give them the meaning they have in common usage and to give this chapter it's most reasonable application.

Accessory structure means a structure having minimal value and used for parking, storage and other nonhabitable uses, such as garages, carports, storage sheds, pole barns, hay sheds and the like.

Addition (to an existing building) means any walled and roofed expansion to the perimeter of a building in which the addition is connected by a common load-bearing wall other than a firewall. Any walled and roofed addition, which is connected by a firewall or is separated by an independent perimeter load-bearing wall, shall be considered "new construction".

Appeal means a request for a review of the zoning director's interpretation of any provision of this chapter.

Area of shallow flooding means a designated AO or AH zone on a community's flood insurance rate map (FIRM) with base flood depths from one to three feet, and/or where a clearly defined channel does not exist, where the path of flooding is unpredictable and indeterminate, and where velocity flow may be evident.

Area of special flood hazard is the land in the floodplain within a community subject to a one-percent or greater chance of flooding in any given year. In the absence of official designation by the Federal Emergency Management Agency, Areas of Special Flood Hazard shall be those designated by the local community and referenced in section 42-33.

Base flood means the flood having a one-percent chance of being equaled or exceeded in any given year.

Base flood elevation (BFE). The elevation shown on the flood insurance rate map for zones AE, AH, A1-A30, AR, AR/A, AR/AE, AR/A1-A30, AR/AH, AR/AO, V1-V30, and VE that indicates the water surface elevation resulting from a flood that has a one-percent chance of equaling or exceeding that level in any given year.

Basement means that portion of a building having its floor subgrade (below ground level) on all sides.

Building means any structure built for support, shelter, or enclosure for any occupancy or storage.

Critical facility means any public or private facility, which, if flooded, would create an added dimension to the disaster or would increase the hazard to life and health. Critical facilities include:

(1) Structures or facilities that produce, use, or store highly volatile, flammable, explosive, toxic, or water-reactive materials;

(2) Hospitals and nursing homes, and housing for the elderly, which are likely to contain occupants who may not be sufficiently mobile to avoid the loss of life or injury during flood and storm events;

(3) Emergency operation centers or data storage centers which contain records or services that may become lost or inoperative during flood and storm events; and

(4) Generating plants, and other principal points of utility lines.

Development means any manmade change to improved or unimproved real estate, including, but not limited to, buildings or other structures, mining, dredging, filling, grading, paving, excavating, drilling operations, and storage of materials or equipment.

Elevated building means a nonbasement building built to have the lowest floor of the lowest enclosed area elevated above the ground level by means of fill, solid foundation perimeter walls, pilings, columns, piers, or shear walls adequately anchored so as not to impair the structural integrity of the building during a base flood event.

Existing construction means for the purposes of determining rates, structures for which the "start of construction" commenced before September 1, 1990.

Existing manufactured home park or subdivision means a manufactured home park or subdivision for which the construction of facilities for servicing the lots on which the manufactured homes are to be affixed (including at a minimum the installation of utilities, the construction of streets, and final site grading or the pouring of concrete pads) is completed before September 1, 1990.

Expansion to an existing manufactured home park or subdivision means the preparation of additional sites by the construction of facilities for servicing the lots on which the manufactured homes are to be affixed, including the installation of utilities, the construction of streets, and either final site grading or the pouring of concrete pads.

Flood or *flooding* means a general and temporary condition of partial or complete inundation of normally dry land areas from:

(1) The overflow of inland or tidal waters; or

(2) The unusual and rapid accumulation or runoff of surface waters from any source.

Flood hazard boundary map (FHBM) means an official map of a community, issued by the Federal Insurance Administration, where the boundaries of areas of special flood hazard have been defined as zone A.

Flood insurance rate map (FIRM) means an official map of a community, issued by the Federal Insurance Administration, delineating the areas of special flood hazard and/or risk premium zones applicable to the community.

Flood insurance study means the official report by the Federal Insurance Administration evaluating flood hazards and containing flood profiles and water surface elevations of the base flood.

Floodplain means any land area susceptible to flooding.

Floodproofing means any combination of structural and nonstructural additions, changes, or adjustments to structures, which reduce or eliminate flood damage to real estate or improved real property, water and sanitary facilities, structures and their contents.

Floodway means the channel of a river or other watercourse and the adjacent land areas that must be reserved in order to discharge the base flood without cumulatively increasing the water surface elevation more than a designated height.

Freeboard means a factor of safety usually expressed in feet above a flood level for purposes of floodplain management. "Freeboard" tends to compensate for the many unknown factors that could contribute to flood heights greater than the height calculated for a selected size flood and floodway conditions, such as wave action, bridge openings, and the hydrological effect of urbanization of the watershed.

Highest adjacent grade means the highest natural elevation of the ground surface, prior to construction, adjacent to the proposed foundation of a building.

Historic structure means any structure that is:

(1) Listed individually in the National Register of Historic Places (a listing maintained by the U.S. Department of Interior) or preliminarily determined by the secretary of the Interior as meeting the requirements for individual listing on the National Register;

(2) Certified or preliminarily determined by the Secretary of the Interior as contributing to the historical significance of a registered historic district or a district preliminarily determined by the Secretary to qualify as a registered historic district;

(3) Individually listed on a state inventory of historic places and determined as eligible by states with historic preservation programs which have been approved by the Secretary of the Interior; or

(4) Individually listed on a local inventory of historic places and determined as eligible by communities with historic preservation programs that have been certified either:

    a. By an approved state program as determined by the Secretary of the Interior, or

    b. Directly by the Secretary of the Interior in states without approved programs.

Lowest floor means the lowest floor of the lowest enclosed area, including basement. An unfinished or flood-resistant enclosure, used solely for parking of vehicles, building access, or storage, in an area other than a basement, is not considered a building's lowest floor, provided that such enclosure is not built so as to render the structure in violation of other provisions of this Code.

Manufactured home means a building, transportable in one or more sections, built on a permanent chassis and designed to be used with or without a permanent foundation when connected to the required utilities. The term also includes park trailers, travel trailers, and similar transportable structures placed on a site for 180 consecutive days or longer and intended to be improved property.

Manufactured home park or subdivision means a parcel (or contiguous parcels) of land divided into two or more manufactured home lots for rent or sale.

Mean sea level means the average height of the sea for all stages of the tide. It is used as a reference for establishing various elevations within the floodplain. For purposes of the National Flood Insurance Program, the National Geodetic Vertical Datum (NGVD) of 1929 or other datum, to which base flood elevations shown on a community's flood insurance rate map are referenced.

National Geodetic Vertical Datum (NGVD) as corrected in 1929, is a vertical control used as a reference for establishing varying elevations within the floodplain.

New construction means, for the purposes of determining insurance rates, structures for which the "start of construction" commenced after September 1, 1990, and includes any subsequent improvements to such structures. For floodplain management purposes, "new construction" means structures for which the "start of construction" commenced after September 1, 1990, and includes any subsequent improvements to such structures.

New manufactured home park or subdivision means a manufactured home park or subdivision for which the construction of facilities for servicing the lots on which the manufactured homes are to be affixed (including at a minimum, the installation of utilities, the construction of streets, and either final site grading or the pouring of concrete pads) is completed after September 1, 1990.

North American Vertical Datum (NAVD) has replaced the National Geodetic Vertical Datum of 1929 in existing and future FEMA Flood Modernization Maps.

Recreational vehicle means a vehicle, which is:

(1) Built on a single chassis;

(2) Four hundred square feet or less when measured at the largest horizontal projection;

(3) Designed to be self-propelled or permanently towable by a light duty truck; and

(4) Designed primarily not for use as a permanent dwelling but as temporary living quarters for recreational, camping, travel, or seasonal use.

Start of construction means the date the development permit was issued, provided the actual start of construction, repair, reconstruction, or improvement was within 180 days of the permit date. The actual start means the first placement of permanent construction of the structure such as the pouring of slabs or footings, installation of piles, construction of columns, or any work beyond the stage of excavation, and includes the placement of a manufactured home on a foundation. Permanent construction does not include initial land preparation, such as clearing, grading and filling; nor does it include the installation of streets and/or walkways; nor does it include excavation for a basement, footings, piers or foundations or the erection of temporary forms; nor does it include the installation on the property of buildings appurtenant to the permitted structure, such as garages or sheds not occupied as dwelling units or part of the main structure. (NOTE: accessory structures are NOT exempt from any ordinance requirements.) For a substantial improvement, the actual start of construction means the first alteration of any wall, ceiling, floor, or other structural part of a building, whether or not that alteration affects the external dimensions of the building.

Structure means a walled and roofed building that is principally above ground, a manufactured home, a gas or liquid storage tank.

Subdivision means the division of a single lot into two or more lots for the purpose of sale or development.

Substantial damage means damage of any origin sustained by a structure whereby the cost of restoring the structure to its before-damaged condition would equal or exceed 50 percent of the market value of the structure before the damage occurred.

Substantial improvement means any reconstruction, rehabilitation, addition, or other improvement of a structure, taking place during a five-year period, in which the cumulative cost equals or exceeds 50 percent of the market value of the structure prior to the "start of construction" of the improvement. NOTE: The market value of the structure should be:

(1) The appraised value of the structure prior to the start of the initial repair or improvement, or

(2) In the case of damage, the value of the structure prior to the damage occurring. This term includes structures, which have incurred "substantial damage", regardless of the actual amount of repair work performed.

For the purposes of this definition, "substantial improvement" is considered to occur when the first alteration of any wall, ceiling, floor, or other structural part of the building commences, whether or not that alteration affects the external dimensions of the building. The term does not, however, include:

(1) Those improvements of a structure required to comply with existing violations of state or local health, sanitary, or safety code specifications which are solely necessary to assure safe living conditions and which have been identified by the code enforcement official, and not solely triggered by an improvement or repair project, or

(2) Any alteration of a "historic structure" provided that the alteration will not preclude the structure's continued designation as a "historic structure".

Substantially improved existing manufactured home parks or subdivisions is where the repair, reconstruction, rehabilitation or improvement of the streets, utilities and pads equals or exceeds 50 percent of the value of the streets, utilities and pads before the repair, reconstruction or improvement commenced.

Variance is a grant of relief from the requirements of this ordinance, which permits construction in a manner otherwise prohibited by this ordinance.

Violation means the failure of a structure or other development to be fully compliant with the community's floodplain management regulations. A structure or other development without the elevation certificate, or other certifications, or other evidence of compliance required by this chapter is presumed to be in violation until such time as that documentation is provided.
(Ord. No. 200904-3o, 4-21-2009)

Cross reference—Definitions generally, § 1-4.

Sec. 42-32. Lands to which article applies.

This article shall apply to all areas of special flood hazard within the jurisdiction of Jones County, Georgia.
(Ord. No. 200904-3o, 4-21-2009)

Sec. 42-33. Basis for establishing areas of special flood hazard.

The areas of special flood hazard identified by the Federal Emergency Management Agency in its flood insurance study (FIS), dated May 4, 2009, with accompanying maps and other supporting data and any revision thereto, are adopted by reference and declared a part of this article.

For those land areas acquired by a municipality through annexation, the current effective FIS dated May 4, 2009, with accompanying maps and other supporting data and any revision thereto, for Jones County, are hereby adopted by reference.

Areas of special flood hazard may also include those areas known to have flooded historically or defined through standard engineering analysis by governmental agencies or private parties but not yet incorporated in a FIS. The repository for public inspection of the flood insurance study (FIS), accompanying maps and other supporting data is located at the Jones County Planning and Zoning Office.
(Ord. No. 200904-3o, 4-21-2009)

Sec. 42-34. Establishment of development permit.

A development permit shall be required in conformance with the provisions of this article prior to the commencement of any development activities.
(Ord. No. 200904-3o, 4-21-2009)

Sec. 42-35. Compliance with article.

No structure or land shall hereafter be located, extended, converted or altered without full compliance with the terms of this article and other applicable regulations.
(Ord. No. 200904-3o, 4-21-2009)

Sec. 42-36. Abrogation and greater restrictions.

This article is not intended to repeal, abrogate, or impair any existing ordinance, easements, covenants, or deed restrictions. However, where this article and another conflict or overlap, whichever imposes the more stringent restrictions shall prevail.
(Ord. No. 200904-3o, 4-21-2009)

Sec. 42-37. Interpretation.

In the interpretation and application of this ordinance all provisions shall be:

(1) Considered as minimum requirements;

(2) Liberally construed in favor of the governing body; and

(3) Deemed neither to limit nor repeal any other powers granted under state statutes.
(Ord. No. 200904-3o, 4-21-2009)

Sec. 42-38. Warning and disclaimer of liability.

The degree of flood protection required by this article is considered reasonable for regulatory purposes and is based on scientific and engineering considerations. Larger floods can and will occur; flood heights may be increased by manmade or natural causes. This article does not imply that land outside the areas of special flood hazard or uses permitted within such areas will be free from flooding or flood damages. This article shall not create liability on the part of Jones County or by any officer or employee thereof for any flood damages that result from reliance on this article or any administrative decision lawfully made hereunder.
(Ord. No. 200904-3o, 4-21-2009)

Sec. 42-39. Penalty for violation of article.

Failure to comply with the provisions of this article or with any of its requirements, including conditions and safeguards established in connection with grants of variance or special exceptions shall constitute a violation. Any person who violates this article or fails to comply with any of its requirements shall, upon conviction thereof, be fined not more than $2500.00 or imprisoned for not more than 60 days, or both, and in addition, shall pay all costs and expenses involved in the case. Each day such violation continues shall be considered a separate offense. Nothing herein contained shall prevent Jones County from taking such other lawful actions as is necessary to prevent or remedy any violation.
(Ord. No. 200904-3o, 4-21-2009)

Sec. 42-40. Statutory authorization.

Article IX, Section II of the Constitution of the State of Georgia and O.C.G.A. § 36-1-20(a) have delegated the responsibility to local governmental units to adopt regulations designed to promote the public health, safety, and general welfare of its citizenry.
(Ord. No. 200904-3o, 4-21-2009)

Sec. 42-41. Findings of fact.

(1) The flood hazard areas of Jones County, Georgia, are subject to periodic inundation which results in loss of life and property, health and safety hazards, disruption of commerce and governmental services, extraordinary public expenditures for flood relief and protection, and impairment of the tax base, all of which adversely affect the public health, safety and general welfare.

(2) These flood losses are caused by the occupancy in flood hazard areas of uses vulnerable to floods, which are inadequately elevated, floodproofed, or otherwise unprotected from flood damages, and by the cumulative effect of obstructions in floodplains causing increases in flood heights and velocities.
(Ord. No. 200904-3o, 4-21-2009)

Sec. 42-42. Statement of purpose.

It is the purpose of this article to promote the public health, safety and general welfare and to minimize public and private losses due to flood conditions in specific areas by provisions designed to:

(1) Require that uses vulnerable to floods, including facilities, which serve such uses, be protected against flood damage at the time of initial construction;

(2) Restrict or prohibit uses which are dangerous to health, safety and property due to water or erosion hazards, or which increase flood heights, velocities, or erosion;

(3) Control filling, grading, dredging and other development which may increase flood damage or erosion; and

(4) Prevent or regulate the construction of flood barriers which will unnaturally divert flood waters or which may increase flood hazards to other lands;

(5) Control the alteration of natural floodplains, stream channels, and natural protective barriers, which are involved in the accommodation of floodwaters.

(Ord. No. 200904-3o, 4-21-2009)

Sec. 42-43. Objectives.

The objectives of this article are:

(1) To protect human life and health;

(2) To minimize damage to public facilities and utilities such as water and gas mains, electric, telephone and sewer lines, streets and bridges located in floodplains;

(3) To help maintain a stable tax base by providing for the sound use and development of floodprone areas in such a manner as to minimize flood blight areas;

(4) To minimize expenditure of public money for costly flood control projects;

(5) To minimize the need for rescue and relief efforts associated with flooding and generally undertaken at the expense of the general public;

(6) To minimize prolonged business interruptions; and

(7) To ensure that potential homebuyers are notified that property is in a flood area.

(Ord. No. 200904-3o, 4-21-2009)

Secs. 42-44—42-65. Reserved.

DIVISION 2. ADMINISTRATION*

Sec. 42-66. Local administrator—Designated.

The zoning director is hereby appointed to administer and implement the provisions of this article.

(Ord. No. 200904-3o, 4-21-2009)

Sec. 42-67. Duties and responsibilities of the administrator.

Duties of the zoning director shall include, but shall not be limited to:

(1) Review proposed development to assure that the permit requirements of this article have been satisfied.

(2) Review proposed development to assure that all necessary permits have been received from governmental agencies from which approval is required by federal or state law, including section 404 of the Federal Water Pollution Control Act Amendments of 1972, 33 U.S.C. 1334. Require that copies of such permits be provided and maintained on file.

(3) Review all permit applications to determine whether proposed building sites will be reasonably safe from flooding.

(4) When base flood elevation data or floodway data have not been provided in accordance with section 42-33, then the zoning director shall obtain, review and reasonably utilize any base flood elevation and floodway data available from a federal, state or other sources in order to administer the provisions of division 3.

(5) Review and record the actual elevation in relation to mean sea level (or highest adjacent grade) of the lowest floor, including basement, of all new or substantially improved structures in accordance with section 42-68(a)(2).

***State law reference—**Administration, ch. 2.

(6) Review and record the actual elevation, in relation to mean sea level to which any new or substantially improved structures have been floodproofed, in accordance with section 42-68(a)(2).

(7) When floodproofing is utilized for a structure, the zoning director shall obtain certification of design criteria from a registered professional engineer or architect in accordance with subsection 42-68(a)(1)c. and section 42-100.

(8) Make substantial damage determinations following a flood event or any other event that causes damage to structures in flood hazard areas.

(9) Notify adjacent communities and the Georgia Department of Natural Resources prior to any alteration or relocation of a watercourse and submit evidence of such notification to the Federal Emergency Management Agency (FEMA).

(10) For any altered or relocated watercourse, submit engineering data/analysis within six months to the FEMA to ensure accuracy of community flood maps through the letter of map revision process. Assure flood-carrying capacity of any altered or relocated watercourse is maintained.

(11) Where interpretation is needed as to the exact location of boundaries of the areas of special flood hazard (for example, where there appears to be a conflict between a mapped boundary and actual field conditions) the zoning director shall make the necessary interpretation. Any person contesting the location of the boundary shall be given a reasonable opportunity to appeal the interpretation as provided in this article.

(12) All records pertaining to the provisions of this article shall be maintained in the office of the zoning director, and shall be open for public inspection.

(Ord. No. 200904-3o, 4-21-2009)

Sec. 42-68. Permit procedures.

(a) Application for a development permit shall be made to the zoning director on forms furnished by the community prior to any development activities, and may include, but not be limited to the following: plans in duplicate drawn to scale showing the elevations of the area in question and the nature, location, dimensions, of existing or proposed structures, earthen fill placement, storage of materials or equipment, and drainage facilities. Specifically, the following information is required:

(1) *Application stage.*

a. Elevation in relation to mean sea level (or highest adjacent grade) of the lowest floor, including basement, of all proposed structures;

b. Elevation in relation to mean sea level to which any nonresidential structure will be floodproofed;

c. Design certification from a registered professional engineer or architect that any proposed nonresidential floodproofed structure will meet the floodproofing criteria of section 42-100);

d. Description of the extent to which any watercourse will be altered or relocated as a result of a proposed development; and

(2) *Construction stage.* For all new construction and substantial improvements, the permit holder shall provide to the administrator an as-built certification of the regulatory floor elevation or floodproofing level immediately after the lowest floor or floodproofing is completed. Any lowest floor certification made relative to mean sea level shall be prepared by or under the direct supervision of a registered land surveyor or professional engineer and certified by same. When floodproofing is utilized for nonresidential structures, said certification shall be prepared by or under the direct supervision of a professional engineer or architect and certified by same. Any work undertaken prior to submission of these certifications shall be at the permit holder's risk.

(b) The zoning director shall review the above-referenced certification data submitted. Deficiencies detected by such review shall be corrected by the permit holder immediately and prior to further progressive work being allowed to proceed. Failure to submit certification or failure to make said corrections required hereby, shall be cause to issue a stop work order for the project.
(Ord. No. 200904-3o, 4-21-2009)

Sec. 42-69. Variance procedures.

(1) The Jones County Board of Appeals and Adjustments as established by the Jones County Board of Commissioners shall hear and decide requests for appeals or variances from the requirements of this article.

(2) The board shall hear and decide appeals when it is alleged an error in any requirement, decision, or determination is made by the zoning director in the enforcement or administration of this article.

(3) Any person aggrieved by the decision of the Jones County Board of Appeals and Adjustments may appeal such decision to the Superior Court of Jones County, as provided in O.C.G.A. § 5-4-1.

(4) Variances may be issued for the repair or rehabilitation of historic structures upon a determination that the proposed repair or rehabilitation will not preclude the structure's continued designation as a historic structure and the variance is the minimum to preserve the historic character and design of the structure.

(5) Variances may be issued for development necessary for the conduct of a functionally dependent use, provided the criteria of this article are met, no reasonable alternative exists, and the development is protected by methods that minimize flood damage during the base flood and create no additional threats to public safety.

(6) Variances shall not be issued within any designated floodway if any increase in flood levels during the base flood discharge would result.

(7) In reviewing such requests, the Jones County Board of Appeals and Adjustments shall consider all technical evaluations, relevant factors, and all standards specified in this and other sections of this article.
(Ord. No. 200904-3o, 4-21-2009)

Sec. 42-70. Conditions for variances.

(1) A variance shall be issued only when there is:

(a) A finding of good and sufficient cause;

(b) A determination that failure to grant the variance would result in exceptional hardship; and

(c) A determination that the granting of a variance will not result in increased flood heights, additional threats to public safety, extraordinary public expense, create nuisance, cause fraud on or victimization of the public, or conflict with existing local laws or ordinances.

(2) The provisions of this article are minimum standards for flood loss reduction; therefore any deviation from the standards must be weighed carefully. Variances shall only be issued upon a determination that the variance is the minimum necessary, considering the flood hazard, to afford relief; and, in the instance of a historic structure, a determination that the variance is the minimum necessary so as not to destroy the historic character and design of the building.

(3) Any applicant to whom a variance is granted shall be given written notice specifying the difference between the base flood elevation and the elevation of the proposed lowest floor and stating that the cost of flood insurance will be commensurate with the increased risk to life and property resulting from the reduced lowest floor elevation.

(4) The zoning director shall maintain the records of all appeal actions and report any variances to the Federal Emergency Management Agency upon request.

(5) Upon consideration of the factors listed above and the purposes of this article, the Jones County Board of Appeals and Adjustments may attach such conditions to the granting of variances as it deems necessary to further the purposes of this article.
(Ord. No. 200904-3o, 4-21-2009)

Secs. 42-71—42-90. Reserved.

DIVISION 3. PROVISIONS FOR FLOOD HAZARD REDUCTION

Sec. 42-91. General standards.

In all areas of special flood hazard the following provisions are required:

(1) New construction and substantial improvements of existing structures shall be anchored to prevent flotation, collapse or lateral movement of the structure;

(2) New construction and substantial improvements of existing structures shall be constructed with materials and utility equipment resistant to flood damage;

(3) New construction or substantial improvements of existing structures shall be constructed by methods and practices that minimize flood damage;

(Ord. No. 200904-3o, 4-21-2009)

Sec. 42-92. Elevated buildings.

All new construction or substantial improvements of existing structures that include any fully enclosed area located below the lowest floor formed by foundation and other exterior walls shall be designed so as to be an unfinished or flood-resistant enclosure. The enclosure shall be designed to equalize hydrostatic flood forces on exterior walls by allowing for the automatic entry and exit of floodwater.

(1) Designs for complying with this requirement must either be certified by a professional engineer or architect or meet the following minimum criteria:

a. Provide a minimum of two openings having a total net area of not less than one square inch for every square foot of enclosed area subject to flooding;

b. The bottom of all openings shall be no higher than one foot above grade; and

c. Openings may be equipped with screens, louvers, valves or other coverings or devices provided they permit the automatic flow of floodwater in both direction.

(2) So as not to violate the "lowest floor" criteria of this ordinance, the unfinished or flood-resistant enclosure shall only be used for parking of vehicles, limited storage of maintenance equipment used in connection with the premises, or entry to the elevated area; and

(3) The interior portion of such enclosed area shall not be partitioned or finished into separate rooms.

(Ord. No. 200904-3o, 4-21-2009)

Sec. 42-93. Technical, construction equipment.

All heating and air conditioning equipment and components (including ductwork), all electrical, ventilation, plumbing, and other service facilities shall be designed and/or located so as to prevent water from entering or accumulating within the components during conditions of flooding.

(Ord. No. 200904-3o, 4-21-2009)

Sec. 42-94. Manufactured homes.

Manufactured homes shall be anchored to prevent flotation, collapse, or lateral movement. Methods of anchoring may include, but are not limited to, use of over-the-top or frame ties to ground anchors. This standard shall be in addition to and consistent with applicable state requirements for resisting wind forces.

(Ord. No. 200904-3o, 4-21-2009)

Sec. 42-95. Water supply systems.

New and replacement water supply systems shall be designed to minimize or eliminate infiltration of floodwaters into the system.
(Ord. No. 200904-3o, 4-21-2009)

Sec. 42-96. Sanitary sewage systems.

New and replacement sanitary sewage systems shall be designed to minimize or eliminate infiltration of floodwaters into the systems and discharges from the systems into floodwaters.
(Ord. No. 200904-3o, 4-21-2009)

Sec. 42-97. Waste disposal systems.

On-site waste disposal systems shall be located and constructed to avoid impairment to them or contamination from them during flooding.
(Ord. No. 200904-3o, 4-21-2009)

Sec. 42-98. Nonconforming repairs, etc.

Any alteration, repair, reconstruction or improvement to a structure, which is not compliant with the provisions of this article, shall be undertaken only if the nonconformity is not furthered, extended or replaced.

In all areas of special flood hazard the following provisions are required.
(Ord. No. 200904-3o, 4-21-2009)

Sec. 42-99. New construction and/or substantial improvements.

Where base flood elevation data are available, new construction and/or substantial improvement of any structure or manufactured home shall have the lowest floor, including basement, elevated no lower than one foot above the base flood elevation. Should solid foundation perimeter walls be used to elevate a structure, openings sufficient to facilitate equalization of flood hydrostatic forces on both sides of exterior walls shall be provided in accordance with standards of section 42-92, "elevated buildings". All heating and air conditioning equipment and components (including ductwork), all electrical, ventilation, plumbing, and other service facilities shall be elevated at or above one foot above the base flood elevation.
(Ord. No. 200904-3o, 4-21-2009)

Cross reference—Buildings, construction and related activities, ch. 18.

Sec. 42-100. Nonresidential construction.

New construction and/or the substantial improvement of any structure located in A1-30, AE, or AH zones, may be floodproofed in lieu of elevation. The structure, together with attendant utility and sanitary facilities, must be designed to be watertight to one foot above the base flood elevation, with walls substantially impermeable to the passage of water, and structural components having the capability of resisting hydrostatic and hydrodynamic loads and the effect of buoyancy. A registered professional engineer or architect shall certify that the design

and methods of construction are in accordance with accepted standards of practice for meeting the provisions above, and shall provide such certification to the official as set forth above and in subsection 42-67(a)(6).
(Ord. No. 200904-3o, 4-21-2009)

Cross reference—Buildings, construction and related activities, ch. 18.

Sec. 42-101. Standards for manufactured homes and recreational vehicles.

Where base flood elevation data are available:

(1) All manufactured homes placed and/or substantially improved on:

a. Individual lots or parcels,

b. In new and/or substantially improved manufactured home parks or subdivisions,

c. In expansions to existing manufactured home parks or subdivisions, or

d. On a site in an existing manufactured home park or subdivision where a manufactured home has incurred "substantial damage" as the result of a flood, must have the lowest floor including basement, elevated no lower than one foot above the base flood elevation.

(2) Manufactured homes placed and/or substantially improved in an existing manufactured home park or subdivision may be elevated so that either:

a. The lowest floor of the manufactured home is elevated no lower than one foot above the level of the base flood elevation, or

b. The manufactured home chassis is elevated and supported by reinforced piers (or other foundation elements of at least an equivalent strength) of no less than 36 inches in height above grade.

(3) All manufactured homes must be securely anchored to an adequately anchored foundation system to resist flotation, collapse and lateral movement. (Ref. section 42-94.)

(4) All recreational vehicles placed on sites must either:

a. Be on the site for fewer than 180 consecutive days;

b. Be fully licensed and ready for highway use, (a recreational vehicle is ready for highway use if it is licensed, on its wheels or jacking system, attached to the site only by quick disconnect type utilities and security devices, and has no permanently attached structures or additions); or

c. The recreational vehicle must meet all the requirements for "new construction", including the anchoring and elevation requirements of subsections (1) and (3), above.

(Ord. No. 200904-3o, 4-21-2009)

Sec. 42-102. Floodway.

Located within areas of special flood hazard established in section 42-33, are areas designated as floodway. A floodway may be an extremely hazardous area due to velocity floodwaters, debris or erosion potential. In addition, the area must remain free of encroachment in order to allow for the discharge of the base flood without increased flood heights. Therefore, the following provisions shall apply:

(1) Encroachments are prohibited, including earthen fill, new construction, substantial improvements or other development within the regulatory floodway. Development may be permitted however, provided it is demonstrated through hydrologic and hydraulic analyses performed in accordance with standard engineering practice that the encroachment shall not result in any increase in flood levels or floodway widths during a base flood discharge. A registered professional engineer must provide supporting technical data and certification thereof.

(2) Only if subsection (1) above is satisfied, then any new construction or substantial improvement shall comply with all other applicable flood hazard reduction provisions of division 3.

(Ord. No. 200904-3o, 4-21-2009)

Sec. 42-103. Building standards for streams without established base flood elevations and/or floodway.

(a) Located within the areas of special flood hazard established in section 42-33, where streams exist but no base flood data have been provided (A-zones), or where base flood data have been provided but a floodway has not been delineated, the following provisions apply:

(1) When base flood elevation data or floodway data have not been provided in accordance with section 42-33, then the zoning director shall obtain, review, and reasonably utilize any scientific or historic base flood elevation and floodway data available from a federal, state, or other source, in order to administer the provisions of division. Only if data are not available from these sources, then the following provisions (2) and (3) shall apply:

(2) No encroachments, including structures or fill material, shall be located within an area equal to the width of the stream or 20 feet, whichever is greater, measured from the top of the stream bank, unless certification by a registered professional engineer is provided demonstrating that such encroachment shall not result in more than a one-foot increase in flood levels during the occurrence of the base flood discharge.

(3) In special flood hazard areas without base flood elevation data, new construction and substantial improvements of existing structures shall have the lowest floor of the lowest enclosed area (including basement) elevated no less than three feet above the highest adjacent grade at the building site. (NOTE: Require the lowest floor to be elevated one foot above the estimated base flood elevation in A-zone areas where a

limited detail study has been completed). Openings sufficient to facilitate the unimpeded movements of floodwaters shall be provided in accordance with standards of section 42-92, "elevated buildings".

(b) All heating and air conditioning equipment and components (including ductwork), all electrical, ventilation, plumbing, and other service facilities shall be elevated no less than three feet above the highest adjacent grade at the building site.

(c) The zoning director shall certify the lowest floor elevation level and the record shall become a permanent part of the permit file.
(Ord. No. 200904-3o, 4-21-2009)

Sec. 42-104. Standards for areas of shallow flooding (AO zones).

Areas of special flood hazard established in section 42-33, may include designated "AO" shallow flooding areas. These areas have base flood depths of one to three feet above ground, with no clearly defined channel. The following provisions apply:

(1) All new construction and substantial improvements of residential and nonresidential structures shall have the lowest floor, including basement, elevated to the flood depth number specified on the flood insurance rate map (FIRM), above the highest adjacent grade. If no flood depth number is specified, the lowest floor, including basement, shall be elevated at least three feet above the highest adjacent grade. Openings sufficient to facilitate the unimpeded movements of floodwaters shall be provided in accordance with standards of section 42-92, "elevated buildings". The zoning director shall certify the lowest floor elevation level and the record shall become a permanent part of the permit file.

(2) New construction or the substantial improvement of a nonresidential structure may be floodproofed in lieu of elevation. The structure, together with attendant utility and sanitary facilities, must be designed to be watertight to the specified FIRM flood level plus one foot, above highest adjacent grade, with walls substantially impermeable to the passage of water, and structural components having the capability of resisting hydrostatic and hydrodynamic loads and the effect of buoyancy. A registered professional engineer or architect shall certify that the design and methods of construction are in accordance with accepted standards of practice for meeting the provisions above, and shall provide such certification to the official as set forth above and as required in subsection 42-68(a)(1)c. and (b).

(3) Drainage paths shall be provided to guide floodwater around and away from any proposed structure.
(Ord. No. 200904-3o, 4-21-2009)

Sec. 42-105. Standards for areas of special flood hazard (zones AE) with established base flood elevations without designated floodways.

Located within the areas of special flood hazard established in section 42-33, where streams with base flood elevations are provided but no floodways have been designated, (zones AE) the following provisions apply:

(1) No encroachments, including fill material, new structures or substantial improvements shall be located within areas of special flood hazard, unless certification by a registered professional engineer is provided demonstrating that the cumulative effect of the proposed development, when combined with all other existing and anticipated development, will not increase the water surface elevation of the base flood more than one foot at any point within the community. The engineering certification should be supported by technical data that conforms to standard hydraulic engineering principles.

(2) New construction or substantial improvements of buildings shall be elevated or floodproofed to elevations established in accordance with sections 42-99 through 42-105.

(Ord. No. 200904-3o, 4-21-2009)

Sec. 42-106. Standards for subdivisions.

(1) All subdivision and/or development proposals shall be consistent with the need to minimize flood damage;

(2) All subdivision and/or development proposals shall have public utilities and facilities such as sewer, gas, electrical and water systems located and constructed to minimize flood damage;

(3) All subdivision and/or development proposals shall have adequate drainage provided to reduce exposure to flood hazards; and

(4) For subdivisions and/or developments greater than 50 lots or five acres, whichever is less, base flood elevation data shall be provided for subdivision and all other proposed development, including manufactured home parks and subdivisions. Any changes or revisions to the flood data adopted herein and shown on the FIRM shall be submitted to FEMA for review as a conditional letter of map revision (CLOMR) or conditional letter of map amendment (CLOMA), whichever is applicable. Upon completion of the project, the developer is responsible for submitting the "as-built" data to FEMA in order to obtain the final LOMR.

(Ord. No. 200904-3o, 4-21-2009)

Sec. 42-107. Standards for critical facilities.

(1) Critical facilities shall not be located in the 100-year floodplain or the 500-year floodplain.

(2) All ingress and egress from any critical facility must be protected to the 500-year flood elevation.

(Ord. No. 200904-3o, 4-21-2009)

Chapters 43—45

RESERVED

Chapter 46

HEALTH AND SANITATION*

Article I. In General

Secs. 46-1—46-30. Reserved.

Article II. State Rules, Regulations

Sec. 46-31. Adopted.
Sec. 46-32. Issuance of citation.
Sec. 46-33. Penalty for violation.

***Cross references—**Animals, ch. 14; buildings, construction and related activities, ch. 18; environment, ch. 34; floods, ch. 42; solid waste, ch. 62; water and sewers, ch. 74.

State law reference—Health generally, O.C.G.A. § 31-1-1 et seq.

ARTICLE I. IN GENERAL

Secs. 46-1—46-30. Reserved.

ARTICLE II. STATE RULES, REGULATIONS

Sec. 46-31. Adopted.

The following rules and regulations of the state department of human resources are hereby adopted:

(1) Chapter 290-5-26, On-Site Sewage Management Systems.

(2) Chapter 290-5-14, Food Service.

(3) Chapter 290-5-18, Tourist Courts.

(Ord. of 10-9-1989, § I)

Sec. 46-32. Issuance of citation.

(a) Upon information of a violation of any of the rules and regulations adopted in this article being made known to the county health officer or to his designee, there shall cause a citation to be issued requiring such violator to appear before the judge of the magistrate court on a day and time certain, then and there to stand trial for such violation.

(b) Citations issued under this section shall be pursuant to O.C.G.A. § 15-10-63 and shall be personally served upon the person accused of such violation. Each citation shall state the time and place at which the accused is to appear for trial.

(Ord. of 10-9-1989, §§ II, IV)

Sec. 46-33. Penalty for violation.

(a) Any person violating the provisions of this article may be punished as provided in section 1-19. Separate offenses shall be deemed to be committed on each day during or on which a violation occurs or continues.

(b) In addition to all other provisions of this article, any violation of this article is hereby deemed to be a continuing nuisance and may be abated by an application for injunction in the superior court or other court of competent jurisdiction.

(Ord. of 10-9-1989, § III)

Chapters 47—49

RESERVED

Chapter 50

HISTORIC PRESERVATION*

Article I. In General

Sec. 50-1. Definitions.
Sec. 50-2. Penalty provisions.
Sec. 50-3. Expenditure of funds.
Sec. 50-4. Ordinary repair.
Sec. 50-5. Conformity with building codes.
Secs. 50-6—50-30. Reserved.

Article II. Historic Preservation Commission

Sec. 50-31. Appointment.
Sec. 50-32. Composition.
Sec. 50-33. Terms.
Sec. 50-34. Compensation.
Sec. 50-35. Advisory authority.
Sec. 50-36. Planning function.
Sec. 50-37. Powers.
Sec. 50-38. Meetings.
Sec. 50-39. Rules of procedure.
Sec. 50-40. Funding.
Sec. 50-41. Records.
Secs. 50-42—50-70. Reserved.

Article III. Designation of Historic Districts and Landmarks

Sec. 50-71. Preliminary research.
Sec. 50-72. Nominations for action.
Sec. 50-73. Preparation of report on proposed designations.
Sec. 50-74. Designation of historic district.
Sec. 50-75. Designation of landmark.
Sec. 50-76. Application for designation.
Sec. 50-77. Required public hearings.
Sec. 50-78. Notification of property owners of proposed designation.
Sec. 50-79. Requirements regarding district boundaries.
Sec. 50-80. Notification of historic preservation section.
Sec. 50-81. Ordinance for designation announcement.
Sec. 50-82. Notification of adoption of ordinance for designation.
Sec. 50-83. Notification of other agencies regarding designation.
Sec. 50-84. Moratorium on applications.
Sec. 50-85. Authority to amend or rescind designation.
Secs. 50-86—50-110. Reserved.

***Cross references—**Buildings, construction and related activities, ch. 18; environment, ch. 34; water and sewers, ch. 74; comprehensive land development, app. A.

Article IV. Application for Certificates of Appropriateness

Sec. 50-111. Approval of alterations or new construction.
Sec. 50-112. Approval of new construction within designated districts.
Sec. 50-113. Guidelines and criteria.
Sec. 50-114. Submission of plans.
Sec. 50-115. Acceptable reaction to application.
Sec. 50-116. Public hearings; notices, and rights to be heard.
Sec. 50-117. Interior alteration.
Sec. 50-118. Technical advice.
Sec. 50-119. Deadline for approval or rejection.
Sec. 50-120. Necessary actions to be taken upon rejection.
Sec. 50-121. Undue hardship.
Sec. 50-122. Requirement of conformance.
Sec. 50-123. Certificate of appropriateness void if construction not commenced.
Sec. 50-124. Recording of applications.
Sec. 50-125. Acquisition of property.
Sec. 50-126. Appeals.
Sec. 50-127. Local or state government actions.
Secs. 50-128—50-160. Reserved.

Article V. Demolition or Relocation Applications

Sec. 50-161. Authority to comment on applications.
Sec. 50-162. Actions acceptable in reaction to application for permit.
Sec. 50-163. Consideration of predemolition plans.
Sec. 50-164. Consideration at postdemolition plans.
Sec. 50-165. Demolition.

ARTICLE I. IN GENERAL

Sec. 50-1. Definitions.

The following words, terms and phrases, when used in this chapter, shall have the meanings ascribed to them in this section, except where the context clearly indicates a different meaning:

Certificate of appropriateness means a document evidencing approval by the historic preservation commission of an application to make a material change in the appearance of a designated historic property or of a property located within a designated historic district.

Exterior architectural features means the architectural style, general design, and general arrangement of the exterior of a building or other structure, including but not limited to the kind of texture of the building material and the type and style of all windows, doors, signs, and other appurtenant architectural fixtures, details or elements relative to the foregoing.

Exterior environmental features means all those aspects of the landscape or the development of the site which affect the historical character of the property.

Historic district means a geographically definable area which contains structures, sites, works of art or a combination thereof which exhibit a special historical, architectural, or environmental character as designated by the board of commissioners.

Historic property means an individual structure, site, or work of art, which exhibits a special historical, architectural or environmental character as designated by the board of commissioners.

Material change in appearance means a change that will affect either the exterior architectural or environmental features of a historic property or any structure, site, or work of art within a historic district, and may include any one or more of the following:

(1) A reconstruction or alteration of the size, shape, or facade of a historic property, including any of its architectural elements or details;

(2) Demolition of a historic structure;

(3) Commencement of excavation for construction purposes;

(4) A change in the location of advertising visible from the public right-of-way;

(5) The erection, alteration, restoration or removal of any building or other structure within a historic property or district, including walls, fences, steps and pavements, or other appurtenant features.

(Ord. of 12-3-1985, § XI)

Cross reference—Definitions generally, § 1-4.

Sec. 50-2. Penalty provisions.

Violations of any provisions of this chapter shall be punished as provided in section 1-19.
(Ord. of 12-3-1985, § VII)

Sec. 50-3. Expenditure of funds.

Any expenditures of public funds will first have to be approved by the board of commissioners.
(Ord. of 12-3-1985, § XII)

Sec. 50-4. Ordinary repair.

Ordinary maintenance or repair of any exterior or architectural feature in or on a historic property that does not involve a material change in design, material, or outer appearance thereof is excluded from review.
(Ord. of 12-3-1985, § VI(A))

Sec. 50-5. Conformity with building codes.

Nothing in this chapter shall be construed as to exempt property owners from complying with existing city or county building codes, nor to prevent any property owner from making any use of his property not prohibited by other statutes, ordinances or regulations.
(Ord. of 12-3-1985, § VI(B))

Cross reference—Construction codes, § 18-31 et seq.

Secs. 50-6—50-30. Reserved.

ARTICLE II. HISTORIC PRESERVATION COMMISSION*

Sec. 50-31. Appointment.

The members of the historic preservation commission shall be appointed by the board of commissioners.
(Ord. of 12-3-1985, § II(A))

Sec. 50-32. Composition.

The historic preservation commission shall consist of three members who shall be residents of the county, and who shall have demonstrated special interest, experience, or education in history, architecture, or the preservation of historic resources.
(Ord. of 12-3-1985, § II(C))

Sec. 50-33. Terms.

Members of the historic preservation commission shall serve three-year terms. The initial members of the commission shall be appointed in such a manner as to achieve staggered terms.
(Ord. of 12-3-1985, § II(C); Ord. No. 2009-07, 9-15-2009)

***Cross reference—**Administration, ch. 2.

Sec. 50-34. Compensation.

Members of the historic preservation commission shall not receive a salary, but will be reimbursed for expenses incurred in the furtherance of their powers and duties.
(Ord. of 12-3-1985, § II(C))

Sec. 50-35. Advisory authority.

The historic preservation commission shall have only advisory authority in recommending landmark and historic district designation.
(Ord. of 12-3-1985, § II(A))

Sec. 50-36. Planning function.

The historic preservation commission shall be considered a part of the planning functions of the county.
(Ord. of 12-3-1985, § II(B))

Sec. 50-37. Powers.

The historic preservation commission shall be authorized to:

(1) Prepare an inventory of all property within its respective historic preservation jurisdiction having the potential for designation as historic property;

(2) Recommend to the board of commissioners specific places, districts, sites, buildings, structures, or works of art to be designated by ordinance as historic properties or historic districts;

(3) Review applications for certificates of appropriateness, and grant or deny such applications in accordance with the provisions of this chapter;

(4) Recommend to the board of commissioners that the designation of any place, district, site, building, structure, or work of art as a historic property or as a historic district be revoked or removed;

(5) Restore or preserve any historic properties acquired by the county;

(6) Promote the acquisition by the county of facade easements and conservation easements in accordance with the provisions of the Facade and Conservation Easement Act of 1976 (1976 Ga. Laws, page 1181);

(7) Conduct an educational program on historic properties located within its historic preservation jurisdiction;

(8) Make such investigations and studies of matters relating to historic preservation as the board of commissioners or the historic preservation commission may, from time to time, deem necessary or appropriate for the purposes of preserving historic resources;

(9) Seek out state and federal funds for historic preservation and make recommendations to the board of commissioners concerning the most appropriate uses of any funds acquired;

(10) Submit to the historic preservation section of the department of natural resources a list of historic properties or historic districts designated;

(11) Perform historic preservation activities as the official agency of the county's historic preservation program;

(12) Employ persons if necessary to carry out the responsibilities of the commission;

(13) Receive donations, grants, funds or gifts of historic property, and acquire and sell historic properties. The commission shall not obligate the county without prior consent;

(14) Review and make comments to the state historic preservation office concerning the nomination of properties within its jurisdiction to the National Register of Historic Places.

(Ord. of 12-3-1985, § II(D))

Sec. 50-38. Meetings.

The historic preservation commission shall provide for the time and place of regular meetings, and for the calling of special meetings. A quorum shall consist of a majority of the members.

(Ord. of 12-3-1985, § II(E))

Sec. 50-39. Rules of procedure.

The historic preservation commission shall adopt rules for the transaction of its business and consideration of applications. The commission shall have the flexibility to adopt rules of procedure without amendment to this article. The latest edition of Robert's Rules of Order, Newly Revised shall determine the order of business at all meetings.

(Ord. of 12-3-1985, § II(E))

Sec. 50-40. Funding.

The historic preservation commission shall have the authority to accept donations and shall ensure that these funds do not displace appropriated governmental funds.

(Ord. of 12-3-1985, § II(F))

Sec. 50-41. Records.

A public record shall be kept of the historic preservation commission's resolutions, proceedings, and actions.

(Ord. of 12-3-1985, § II(G))

Secs. 50-42—50-70. Reserved.

ARTICLE III. DESIGNATION OF HISTORIC DISTRICTS AND LANDMARKS

Sec. 50-71. Preliminary research.

The historic preservation commission shall have the authority to compile and collect information and conduct surveys of historic resources within the county.
(Ord. of 12-3-1985, § III(A)(1))

Sec. 50-72. Nominations for action.

The historic preservation commission shall present to the board of commissioners nominations for historic districts and local landmarks.
(Ord. of 12-3-1985, § III(A)(2))

Sec. 50-73. Preparation of report on proposed designations.

(a) The historic preservation commission shall prepare formal reports when nominating historic districts or local landmarks. These reports shall be used to educate the community and to provide a permanent record of the designation. The report will follow guidelines for nominating structures to the National Register of Historic Places and shall consist of two parts:

(1) A physical description; and

(2) A description of historic significance.

(b) This report will be submitted to the historic preservation section of the department of natural resources.
(Ord. of 12-3-1985, § III(A)(3))

Sec. 50-74. Designation of historic district.

(a) *Criteria.* A historic district is a geographically definable area, which contains structures, sites, works of art, or a combination thereof, which:

(1) Have special character or special historic/aesthetic value or interest;

(2) Represent one or more periods or styles of architecture typical of one or more eras in the history of the municipality, county, state, or region;

(3) Cause such area by reason of such factors to constitute a visibly perceptible section of the municipality or county.

(b) *Boundaries.* Boundaries of a historic district shall be specified on tax maps; these boundaries will be included in the separate ordinances designating local districts. Boundaries specified in legal notices shall coincide with the boundaries finally designated. Districts shall be shown on the official zoning map; or, in the absence of zoning, on an official map designated as a public record.

(c) *Evaluation of properties.* Individual properties within historic districts shall be classified as:

(1) Historic (more than 50 years old);

(2) Nonhistoric (less than 50 years old, yet possessing architectural character);

(3) Intrusions (structures less than 50 years old which do not contribute to the historical character of the district).

(d) *Affirmation of existing zoning.* This chapter is not a use provision, and local zoning laws, where they exist, remain in effect until modified.
(Ord. of 12-3-1985, § III(B))

Sec. 50-75. Designation of landmark.

(a) *Criteria.* A historic landmark is a structure, site, or work of art, including the adjacent area necessary for the proper appreciation or use thereof, deemed worthy of preservation by reason of value to the county for one or more of the following reasons:

(1) It is an outstanding example of a structure representative of its era;

(2) It is one of the few remaining examples of past architectural style;

(3) It is a place or structure associated with an event or person of historic or cultural significance to the county, state or the region.

(b) *Boundary description.* Boundaries shall be clearly defined for individual properties on tax maps and located on the official zoning map, or in the absence of zoning, on an official map designated as a public record.
(Ord. of 12-3-1985, § III(C))

Sec. 50-76. Application for designation.

(a) *Historic district.* A historical society, neighborhood association, or group of property owners may apply for designation.

(b) *Landmark structure.* A historical society or property owner may apply for designation.
(Ord. of 12-3-1985, § III(D)(1))

Sec. 50-77. Required public hearings.

The historic preservation commission and the board of commissioners shall hold a public hearing on the proposed ordinance for designation. Notice of the hearing shall be published in at least three consecutive issues in the legal organ of the county, and property to be affected will be posted with public notice. All such notices will be published or posted not less than ten nor more than 20 days prior to the date set for the public hearing.
(Ord. of 12-3-1985, § III(D)(2))

Sec. 50-78. Notification of property owners of proposed designation.

Any ordinance designating any property or district as historic shall describe each property to be designated, set forth the names of the owners of the designated property, and require that a certificate of appropriateness be obtained from the historic preservation commission prior to any material changes in appearance of the designated property.
(Ord. of 12-3-1985, § III(D)(3))

Sec. 50-79. Requirements regarding district boundaries.

Any ordinance designating any property or district as historic shall require that the designated property or district be shown on the official zoning map, or other designated map in the absence of zoning, of the county and kept as a public record to provide notice of such designation.
(Ord. of 12-3-1985, § III(D)(4))

Sec. 50-80. Notification of historic preservation section.

Prior to designating any property or district as historic, the historic preservation commission must submit a report on the historic, cultural, architectural, or aesthetic significance of each place, district, site, building, structure, or work of art, to the historic preservation section of the department of natural resources. Thirty days will be allowed to prepare written comments.
(Ord. of 12-3-1985, § III(D)(5))

Sec. 50-81. Ordinance for designation announcement.

A decision to accept or deny the ordinance for designation shall be made within 15 days following the public hearing, and shall be in the form of a resolution to the board of commissioners.
(Ord. of 12-3-1985, § III(D)(6))

Sec. 50-82. Notification of adoption of ordinance for designation.

Within 30 days immediately following the adoption of the ordinance for designation, the owners and occupants of each designated historic property, and the owners and occupants of each structure, site, or work of art located within a designated historic district shall be given written notification of such designation by the board of commissioners; which notice shall apprize such owners and occupants of the necessity of obtaining a certificate of appropriateness prior to undertaking any material change in appearance of the historic property designated or within the historic district to be designated.
(Ord. of 12-3-1985, § III(D)(7))

Sec. 50-83. Notification of other agencies regarding designation.

The historic preservation commission shall notify all necessary agencies within the county of the ordinance for designation, including the local historical organization.
(Ord. of 12-3-1985, § III(D)(8))

Sec. 50-84. Moratorium on applications.

If an ordinance for designation in being considered, the historic preservation commission shall have the power to freeze the status of the involved property.
(Ord. of 12-3-1985, § III(D)(9))

Sec. 50-85. Authority to amend or rescind designation.

The historic preservation commission has the authority to amend and/or rescind the designation if necessary.
(Ord. of 12-3-1985, § III(D)(10))

Secs. 50-86—50-110. Reserved.

ARTICLE IV. APPLICATION FOR CERTIFICATES OF APPROPRIATENESS

Sec. 50-111. Approval of alterations or new construction.

After the designation by ordinance of a historic property or of a historic district, no material change in the appearance at such historic property, or of a structure, site, or work of art within such historic district, shall be made or be permitted to be made by the owner or occupant thereof, unless or until application for a certificate of appropriateness has been submitted to and approved by the historic preservation commission.
(Ord. of 12-3-1985, § IV(A))

Sec. 50-112. Approval of new construction within designated districts.

The historic preservation commission shall issue certificates of appropriateness to new structures constructed within designated historic districts. These structures shall conform in design, scale, building materials, setback, and landscaping to the character of the district specified in the commission's design guidelines.
(Ord. of 12-3-1985, § IV(B))

Sec. 50-113. Guidelines and criteria.

When considering applications for certificates of appropriateness to existing buildings, the Secretary of the Interior's standards of rehabilitation shall be used as a guideline along with any other criteria adopted by the commission.
(Ord. of 12-3-1985, § IV(C))

Sec. 50-114. Submission of plans.

An application for certificate of appropriateness shall be accompanied by such drawings, photographs, or plans, as may be required by the historic preservation commission.
(Ord. of 12-3-1985, § IV(D))

Sec. 50-115. Acceptable reaction to application.

(a) The historic preservation commission shall approve the application and issue a certificate of appropriateness if it finds that the proposed material changes in the appearance would not have a substantial adverse effect on the aesthetic, historic, or architectural significance and value of the historic property or the historic district. In making this determination, the commission shall consider, in addition to any other pertinent factors, the historical and architectural value and significance, architectural style, general design arrangement, texture, and material of the architectural features involved, and the relationship thereof to the exterior architectural style, and pertinent features of the other structures in the immediate neighborhood.

(b) The historic preservation commission shall deny a certificate of appropriateness if it finds that the proposed material changes in appearance would have substantial adverse effects on the aesthetic, historic, or architectural significance and value of the historic property or historic district.
(Ord. of 12-3-1985, § IV(E))

Sec. 50-116. Public hearings; notices, and rights to be heard.

At least seven days prior to review of a certificate of appropriateness, the historic preservation commission shall take such action as may reasonably be required to inform the owners of any property likely to be affected by reason of the application, and shall give the applicant and such owners an opportunity to be heard. In cases where the commission deems it necessary, it may hold a public hearing concerning the application.
(Ord. of 12-3-1985, § IV(F))

Sec. 50-117. Interior alteration.

In its review of applications for certificates of appropriateness, the historic preservation commission shall not consider interior arrangement or use having no effect on exterior architectural features.
(Ord. of 12-3-1985, § IV(G))

Sec. 50-118. Technical advice.

When dealing with difficult technical questions, the historic preservation commission shall have the power to seek expert advice.
(Ord. of 12-3-1985, § IV(H))

Sec. 50-119. Deadline for approval or rejection.

(a) The historic preservation commission shall approve or reject an application for a certificate of appropriateness within not more than 45 days after the filing thereof by the owner or occupant of a historic property, or of a structure, site, or work of art located within a historic district. Evidence of approval shall be by a certificate of appropriateness issued by the commission.

(b) Failure of the historic preservation commission to act within such 45 days shall constitute approval, and no other evidence of approval shall be needed.
(Ord. of 12-3-1985, § IV(I))

Sec. 50-120. Necessary actions to be taken upon rejection.

(a) If the historic preservation commission rejects an application, it shall state its reasons for doing so, and shall transmit a record of such actions and reasons, in writing, to the applicant. The commission may suggest alternative courses of action it thinks proper if it disapproves of the application submitted. The applicant, if he so desires, may make modifications to the plans and may resubmit the application at any time after doing so.

(b) In cases where the applicant covers a material change in the appearance of a structure which would require the issuance of a building permit, the rejection of the application for a certificate of appropriateness by the historic preservation commission shall be binding upon the building inspector or other administrative officer charged with issuing building permits and, in such a case, no building permit shall be issued.
(Ord. of 12-3-1985, § IV(J))

Sec. 50-121. Undue hardship.

Where by reason of unusual circumstances the strict application of any provision of this chapter would result in the exceptional practical difficulty or undue hardship upon any owner of a specific property, the historic preservation commission in passing upon applications, shall have the power to vary or modify strict adherence to such provisions, or to interpret the meaning of such provisions so as to relieve such difficulty or hardship. Provided, such variances, modifications, or interpretations shall remain in harmony with the general purpose and intent of such provisions, so that the architectural or historical integrity, or character of the property, shall be conserved and substantial justice done. In granting variances, the commission may impose such reasonable and additional stipulations and conditions as will, in its judgement, best fulfill the purpose of this chapter. An undue hardship shall be a situation not of the person's own making, which is:

(1) A problem unique to a specific property; or

(2) In order to comply with this chapter, the person will conflict with any other ordinance of the county.

(Ord. of 12-3-1985, § IV(K))

Sec. 50-122. Requirement of conformance.

Work not in accordance with an issued certificate of appropriateness shall be halted before it is completed.
(Ord. of 12-3-1985, § IV(L))

Sec. 50-123. Certificate of appropriateness void if construction not commenced.

A certificate of appropriateness shall become void unless construction is commenced within six months of its date of issuance. Certificates of appropriateness shall be issued for a period of 18 months and are renewable.
(Ord. of 12-3-1985, § IV(M))

Sec. 50-124. Recording of applications.

The historic preservation commission shall keep a record of all applications for certificates of appropriateness, and at all the commission's proceedings in connection with such applications.
(Ord. of 12-3-1985, § IV(N))

Sec. 50-125. Acquisition of property.

The historic preservation commission may, where such action is authorized by the board of commissioners, and is reasonably necessary or appropriate for the preservation of a unique historic property, enter into negotiations with the owner for the acquisition of a gift, purchase, exchange, or otherwise, of the property or any interest therein.
(Ord. of 12-3-1985, § IV(O))

Sec. 50-126. Appeals.

Any person adversely affected by any determination made by the historic preservation commission relative to the issuance or denial of a certificate of appropriateness may appeal such determination to the board of commissioners; the appeal must be applied for within 15 days after notification is sent. The county may approve, modify, or reject the determination made by the commission, if the board of commissioners finds that the commission abused its discretion in reaching its decision. Appeals from decisions by the county made pursuant to the state historic preservation act may be taken to the county superior court in the manner provided by law, for appeals from conviction for municipal or county ordinance violations.
(Ord. of 12-3-1985, § IV(P))

Sec. 50-127. Local or state government actions.

The department of transportation and any contractors, including cities and counties, performing work funded by the department of transportation are exempt from this article. Local governments are exempt from the requirement of obtaining certificates of appropriateness; provided, however, that local governments shall notify the commission 45 business days prior to beginning any undertaking that would otherwise require a certificate of appropriateness and allow the commission an opportunity to comment. (Ga. L. 1980, p. 1723, sec. 7)
(Ord. No. 201411-1o, 12-2-2014)

Secs. 50-128—50-160. Reserved.

ARTICLE V. DEMOLITION OR RELOCATION APPLICATIONS*

Sec. 50-161. Authority to comment on applications.

The historic preservation commission shall have the authority to comment on any request for a permit to demolish or relocate a structure within a historic district, or classified as a historic landmark.
(Ord. of 12-3-1985, § V(A))

Sec. 50-162. Actions acceptable in reaction to application for permit.

The historic preservation commission shall have the authority to deny demolition or relocation permits within its jurisdiction.
(Ord. of 12-3-1985, § V(B))

Sec. 50-163. Consideration of predemolition plans.

A public hearing shall be scheduled for each application for demolition. This hearing shall be scheduled prior to the delay period specified.
(Ord. of 12-3-1985, § V(C))

Sec. 50-164. Consideration at postdemolition plans.

The historic preservation commission shall not grant demolition permission without reviewing at the same time the plans for the building that would replace the structure.
(Ord. of 12-3-1985, § V(D))

Sec. 50-165. Demolition.

A decision by the commission approving or denying a certificate of appropriateness for the demolition of buildings, structures, sites, tress judged to be 50 years old or older, or objects shall be guided by:

(1) The historic, scenic or architectural significance of the building, structure, site, tree or object.

(2) The importance of the building, structure, site, tree, or object to the ambiance of a district.

(3) The difficulty or the impossibility of reproducing such a building, structure, site, tree, or object because of its design, texture, material, detail, or unique location.

(4) Whether the building, structure, site, tree, or object is one of the last remaining examples of its kind in the neighborhood or the city.

(5) Whether there are definite plans for use of the property if the proposed demolition is carried out, and what the effect of those plans on the character of the surrounding area would be.

***Cross reference—**Buildings, construction and related activities, ch. 18.

(6) Whether reasonable measures can be taken to save the building, structure, site, tree, or object from collapse.

(7) Whether the building, structure, site, tree, or object is capable of earning reasonable economic return on its value.

(Ord. of 12-3-1985, § V(E); Ord. No. 201411-1o, 12-2-2014)

Chapter 51

RESERVED

Chapter 52

IMPACT FEES

Article I. In General

Secs. 52-1—52-20. Reserved.

Article II. Development Impact Fee Ordinance

Sec. 52-21. Short title, authority, and applicability.
Sec. 52-22. Findings, purpose, and intent.
Sec. 52-23. Rules of construction and definitions.
Sec. 52-24. Imposition of development impact fees.
Sec. 52-25. Fee assessment and payment.
Sec. 52-26. Exemptions.
Sec. 52-27. Deposit and expenditure of fees.
Sec. 52-28. Credits.
Sec. 52-29. Refunds.
Sec. 52-30. Private contractual agreements.
Sec. 52-31. Periodic review and amendments.
Sec. 52-32. Administrative appeals.
Sec. 52-33. Enforcement and penalties.
Sec. 52-34. Repealer, severability, and effective date.

Appendix A. Fee Schedule

ARTICLE I. IN GENERAL

Secs. 52-1—52-20. Reserved.

ARTICLE II. DEVELOPMENT IMPACT FEE ORDINANCE

Sec. 52-21. Short title, authority, and applicability.

(a) *Short title.* This article shall be known and may be cited as the "Development Impact Fee Ordinance of Jones County, Georgia," or, for brevity, the "Impact Fee Ordinance."

(b) *Authority.* This article has been prepared and adopted by the Board of Commissioners of Jones County, Georgia, in accordance with the authority provided by Article 9, Section 2, Paragraph 3 of the Constitution of the State of Georgia, the Georgia Development Impact Fee Act (O.C.G.A. 36-71-1 et seq. as amended), and such other laws as may apply to the provision of public facilities and the power to charge fees for such facilities.

(c) *Applicability.*

(1) The provisions of this article shall not be construed to limit the power of Jones County, Georgia, to use any other legal methods or powers otherwise available for accomplishing the purposes set forth herein, either in substitution of or in conjunction with this article.

(2) This article shall apply to all areas under the regulatory control and authority of Jones County, Georgia, and such other areas as may be included by intergovernmental agreement.

(Ord. No. 200810-1o, § 1, 10-7-2008)

Sec. 52-22. Findings, purpose, and intent.

(a) *Findings.* The Board of Commissioners of Jones County, Georgia, finds and declares:

(1) An equitable program for planning and financing public facilities to serve new growth and development is necessary in order to promote and accommodate orderly growth and development and to protect the public health, safety, and general welfare of the citizens of Jones County; and

(2) Certain public facilities as herein defined have been and must be further expanded if new growth and development is to be accommodated at the same level of service available to existing development; and

(3) It is fair and equitable that new growth and development shall bear a proportionate share of the cost of such public facilities necessary to serve new growth and development.

(b) *Purpose.*

(1) The purpose of this article is to impose impact fees, as hereinafter set forth, for certain public facilities, as hereinafter defined.

(2) It is also the purpose of this article to ensure that adequate public facilities are available to serve new growth and development in Jones County and to provide that new growth and development bears a proportionate share of the cost of new public facilities needed to serve them.

(3) *Intent.* This article is intended to implement and be consistent with the Jones County Comprehensive Plan, as it may be adopted or amended in accord with the Georgia Comprehensive Planning Act (O.C.G.A. 50-8-1 et seq.); and the applicable Minimum Standards and Procedures for Local Comprehensive Planning and the Development Impact Fee Compliance Requirements, both as adopted by the Georgia Board of Community Affairs and amended from time to time.

(Ord. No. 200810-1o, §§ 1, 2, 10-7-2008)

Sec. 52-23. Rules of construction and definitions.

The provisions of this article shall be construed so as to effectively carry out its purpose in the interest of the public health, safety, and general welfare of the citizens of Jones County.

(a) *Rules of construction.* Unless otherwise stated in this article, the following rules of construction shall apply to the text of this article:

(1) In the case of any difference of meaning or implication between words or phrases as used in this article and as used in other codes, regulations or laws of Jones County, such difference shall not affect the meaning or implication of such words or phrases as used in this article.

(2) In the case of any difference of meaning or implication between the text of this article and any caption, illustration, summary table or illustrative table, the text shall control.

(3) The word "shall" is always mandatory and not discretionary; the word "may" is permissive.

(4) Words used in the present tense shall include the future and words used in the singular number shall include the plural and the plural the singular, unless the context clearly indicates the contrary.

(5) The word "person" includes an individual, a corporation, a partnership, an incorporated association, or any other legal or similar entity.

(6) The conjunction "and" indicates that all the connected terms, conditions, provisions, or events shall apply.

(7) The conjunction "or" indicates that the connected items, conditions, provisions, or events may apply singly or in any combination.

(8) The use of "either ... or" indicates that the connected items, conditions, provisions, or events shall apply singly and not in combination.

(9) The word "includes" or "including" shall not limit a term to the specific example but is intended to extend its meaning to all other instances or circumstances of like kind or character.

(10) The article, section, and paragraph headings and enumerations used in this article are included solely for convenience and shall not affect the interpretation of this article.

(b) *Definitions.* As used in this article, the following terms shall have the meaning set forth below.

Administrator means the County Administrator of Jones County, Georgia, or the county administrator's designee, who is hereby charged with implementation and enforcement of this article.

Board of commissioners means the Board of Commissioners of Jones County, Georgia.

Building permit is the permit required for new construction, completion of construction, or an interior finish pursuant to the applicable building code. As used herein, the term shall not include permits required for remodeling, rehabilitation, or other improvements to an existing structure provided there is no increase in the demand placed on those public facilities as defined herein.

Capital improvement means an improvement with a useful life of ten years or more, by new construction or other action, which increases the service capacity of a public facility.

Capital improvements element means that portion of the Jones County Comprehensive Plan that sets out projected needs for system improvements during the planning horizon established therein, which provides a schedule that will meet the anticipated need for system improvements, and which provides a description of anticipated funding sources for each required improvement, as most recently adopted or amended by the board of commissioners.

Commencement of construction, for private development, means initiation of physical construction activities as authorized by a development or building permit and leading to completion of a foundation inspection or other initial inspection and approval by a public official charged with such duties; and for public projects, means expenditure or encumbrance of any funds, whether they be development impact fee funds or not, for a public facilities project, or advertising of bids to undertake a public facilities project.

Comprehensive plan means the Jones County Plan or planning elements as adopted or amended in accord with the Georgia Comprehensive Planning Act (O.C.G.A. 50-8-1 et seq.) and the applicable Minimum Standards and Procedures for Local Comprehensive Planning as adopted by the Georgia Board of Community Affairs.

County means Jones County, a legal subdivision of the State of Georgia.

Day means a calendar day, unless otherwise specifically identified as a "work" day or other designation when used in the text.

Developer means any person or legal entity undertaking development.

Development means any action which creates demand on or need for public facilities, as defined herein, and includes any construction or expansion of a building, structure, or use; any change in use of land, a building, or structure; or the connection of any building or structure to a public utility.

Development approval means written authorization, such as issuance of a building permit, land disturbance permit or other approval for grading or site development, or other forms of official action required by local law or regulation prior to commencement of construction.

Development impact fee means the payment of money imposed upon and paid by new development as a condition of development approval as its proportionate share of the cost of system improvements needed to serve it.

Encumber means to legally obligate by contract or otherwise commit to use by appropriation or other official act of Jones County, Georgia.

Excess capacity means that portion of the capacity of a public facility or system of public facilities which is beyond that necessary to provide adequate service to existing development at the adopted level-of-service standard.

Feepayor means that person or entity who pays a development impact fee, or his or her legal successor in interest when the right or entitlement to any refund of previously paid development impact fees which is required by this article has been expressly transferred or assigned to the successor in interest.

Individual assessment determination means a finding by the administrator that an individual assessment study does or does not meet the requirements for such a study as established by this article or, if the requirements are met, the fee calculated therefrom.

Individual assessment study means the engineering, financial, or economic documentation prepared by a feepayor or applicant to allow individual determination of a development impact fee other than by use of the applicable fee schedule.

Level of service means a measure of the relationship between service capacity and service demand for specified public facilities as established by Jones County, Georgia in terms of demand to capacity ratios or the comfort and convenience of use or service of such public facilities or both.

Present value means the current value of past, present, or future payments, contributions, or dedications of goods, services, materials, construction, or money, as calculated using accepted methods of financial analysis for determination of "net present value."

Project means a single improvement or set of interrelated improvements undertaken together within a finite time period at a specific location. With regard to land development, a project may be identified as those construction activities authorized collectively by a building permit or other development approval, or for an interrelated collection of buildings and common public facilities such as a residential subdivision or an office park.

Project improvements means site specific improvements or facilities that are planned, designed, or built to provide service for a specific development project and that are necessary for the use and convenience of the occupants or users of that project only, and that are not "system" improvements. The character of the improvement shall control a determination of whether an improvement is a "project" improvement or a "system" improvement, and the physical location of the improvement on-site or off-site shall not be considered determinative of whether an improvement is a "project" improvement or a "system" improvement. A project improvement may provide no more than incidental service or facility capacity to persons other than users or occupants of the particular project they serve. No improvement or facility included in a plan for public facilities and approved for public funding by Jones County, Georgia shall be considered a project improvement.

Property owner means that person or entity that holds legal title to property.

Proportionate share means that portion of the cost of system improvements that is reasonably and fairly related to the service demands and needs of a project.

Public facilities means: (A) Parks, open space, and recreation areas and related facilities; and (B) Public safety facilities, including sheriff, inmate housing, fire, emergency medical, and rescue facilities; (C) Libraries and related facilities; and (D) Roads, streets, and bridges, including rights of way, traffic signals, landscaping, and any other components of state or federal highways.

Service area means a geographically defined area as designated in the capital improvements element of the comprehensive plan in which a defined set of public facilities provide or are proposed to provide service to existing or future development.

System improvement costs means costs incurred to provide public facilities capacity to serve new growth and development, including the costs of planning, design, engineering, construction, land acquisition, and land improvement for the construction or reconstruction of facility improvements or expansions. System improvement costs include the construction contract price, surveying and engineering fees, related land acquisition costs (including land purchases, court awards and costs, attorneys' fees, and expert witness fees), and expenses incurred for qualified staff or any qualified engineer, planner, architect, landscape architect, or financial consultant for preparing or updating the capital improvements element, and administrative costs of up to three percent of the total of all other system improvement costs. Projected interest charges and other finance costs may be included if the impact fees are to be used for the payment of principal and interest on bonds, notes, or other financial obligations issued to finance system improvements, but such costs do not include routine and periodic maintenance expenditures, personnel training, and other operating costs.

System improvements means capital improvements that are public facilities designed to provide service to more than one project or to the community at large, in contrast to "project" improvements.

Unit of development means the standard incremental measure of land development activity for a specific type of land use upon which the rate of demand for public service and facilities is based, such as a dwelling unit, square foot of floor area, motel room, etc.

Unused or excess impact fee means any individual impact fee payment from which no amount of money or only a portion thereof has been encumbered or expended according to the requirements of this article.
(Ord. No. 200810-1o, § 3, 10-7-2008)

Sec. 52-24. Imposition of development impact fees.

Any person who after the effective date of this article engages in development shall pay a development impact fee in the manner and amount set forth in this article.

(a) *Construction not subject to impact fees.* The following projects and construction activities do not constitute "development" as defined in this article, and are therefore not subject to the imposition of impact fees:

(1) Rebuilding no more than the same number of units of development as defined in this article that were removed by demolition, or destroyed by fire or other catastrophe, on the same lot or property.

(2) Remodeling or repairing a structure that does not result in an increase in the number of units of development.

(3) Replacing a residential housing unit with another housing unit on the same lot or property.

(4) Placing or replacing a manufactured home in a manufactured home park on a prepared manufactured home pad in existence and operation prior to the effective date of this article.

(5) Placing a temporary construction or sales office on a lot during the period of construction or build-out of a development project.

(6) Constructing an addition to or expansion of a residential housing unit that does not increase the number of housing units.

(7) Adding uses that are typically accessory to residential uses and intended for the personal use of the residents, such as a deck or patio, satellite antenna, pet enclosure, or private recreational facilities such as a swimming pool.

(b) *Grandfathered projects.*

(1) Notwithstanding any other provision of this article, that portion of a project for which a valid building permit has been issued prior to the effective date of this article shall not be subject to development impact fees so long as the permit remains valid and construction is commenced and is pursued according to the terms of the permit.

(2) Any building for which a valid and complete application for a building permit has been received prior to the effective date of this article may proceed without payment of fees otherwise imposed by this article, provided that:

a. All fees and development exactions in effect prior to the effective date of this article shall be or have been paid in full; and,

b. Said construction shall be commenced, pursued and completed within the time established by the building permit, or within 180 days, whichever is later.

(c) *Method of Calculation.*

(1) Any development impact fee imposed pursuant to this article shall not exceed a project's proportionate share of the cost of system improvements, shall be calculated on the basis of the establishment of service areas, and shall be calculated on the basis of levels of service for public facilities that are the same for existing development as for new growth and development, as established in the capital improvements element of the comprehensive plan.

(2) Notwithstanding anything to the contrary in this article, the calculation of impact fees shall be net of credits for the present value of ad valorem taxes or other revenues as established in the capital improvements element of the comprehensive plan, and which:

a. Are reasonably expected to be generated by new growth and development; and

b. Are reasonably expected on the basis of historical funding patterns to be made available to pay for system improvements of the same category and in the same service area for which an impact fee is imposed.

(3) The method of calculating impact fees for public facilities under this article shall be maintained for public inspection as a part of the official records of Jones County, Georgia, and may be amended from time to time by official act.

(4) In addition to the cost of new or expanded system improvements needed to be built to serve new development, the cost basis of a development impact fee may also include the proportionate cost of existing system improvements to the extent that such public facilities have excess service capacity and new development will be served by such facilities, as established in the capital improvements element of the comprehensive plan.

(5) Development impact fees shall be based on actual system improvement costs or reasonable estimates of such costs, as set forth in the capital improvements element of the comprehensive plan.

(Ord. No. 200810-1o, § 4, 10-7-2008)

Sec. 52-25. Fee assessment and payment.

(a) *Fee schedule.*

(1) Payment of a development impact fee pursuant to the fee schedule attached hereto and incorporated herein as Attachment A for a property located inside of Jones County,

shall constitute full and complete payment of the project's proportionate share of system improvements as individually levied by Jones County, and shall be deemed to be in compliance with the requirements of this article.

(2) When a land development activity for which an application for a building permit has been made includes two or more buildings, structures or other land uses in any combination, including two or more uses within a building or structure, the total development impact fee shall be the sum of the fees for each and every building, structure, or use, including each and every use within a building or structure.

(3) In the event that an applicant contends that the land use category of the proposed development is not shown on the fee schedule or fits within a different category, then:

a. The administrator in his or her sole discretion shall make a determination as to the appropriate land use designation and the appropriate development impact fee.

b. In making such determination, the administrator may require such additional information from the applicant as necessary to form a logical fee determination relative to the impact fees shown on the adopted fee schedule.

c. If a land use designation is not in a category contained in this article, then an appropriate new category may be added by the administrator and an appropriate fee established under the county's current impact fee methodology, subject to annual confirmation by the board of commissioners.

d. Appeals from the decision of the administrator shall be made to the board of commissioners in accordance with the administrative appeals section of this article.

(b) *Timing of assessment and payment.*

(1) Development impact fees shall be assessed at the time of application for a building permit.

(2) All development impact fees shall be collected no earlier than the time of issuance of a building permit, and no later than as a prerequisite to issuance of a certificate of occupancy for the building.

(3) For projects not involving issuance of a building permit, all development impact fees shall be collected at the time of approval of the development permit or such other authorization to commence construction or to commence use of a property.

(4) If the final use of a building cannot be determined at the time of the initial building permit, the administrator shall have the authority to assess a development impact fee based on the most likely use of the building, and shall adjust the fee in accordance with the actual use prior to issuance of an interior finishes permit or approval of a certificate of occupancy. An adjustment may result in a refund to the feepayor or payment of the marginal increase of the adjusted fee over the amount already paid.

(5) Notwithstanding any other provision of this article, any future change in demand for public facilities in excess of the average demand anticipated at the time of issuance of the building permit shall be assessed such additional fee as would otherwise have been due. Future changes in demand may result from a change in the land use category of the occupant of the building or property, the expansion of a building or use on a property that results in an increase in the units of development (as defined herein), or the subsequent discovery of facts unknown or misrepresented at the time of issuance of the building permit.

(c) *Individual assessment determinations.* Individual assessments of development impact fees may be established as follows:

(1) At their option, an applicant for development approval may petition the administrator for an individual assessment determination of development impact fees due for their project in lieu of the fee established on the fee schedule attached hereto and incorporated herein as Attachment A.

(2) In the event that an applicant elects an individual assessment, the applicant shall submit an individual assessment study. Each individual assessment study shall:

a. Be based on relevant and credible information from an accepted standard source of engineering or planning data; or,

b. Be based on actual, relevant, and credible studies or surveys of facility demand conducted in Jones County or its region, carried out by qualified engineers or planners pursuant to accepted methodology; and,

c. Provide any other written specifications as may be reasonably required by the Administrator to substantiate the individual assessment determination.

(3) The administrator in his or her sole discretion shall determine whether the content of an individual assessment study satisfies the requirements of this article. A negative determination by the administrator may be appealed to the board of commissioners in accordance with the administrative appeals section of this article.

(4) Any fee approved as an individual assessment determination shall have standing for 180 days following the date of approval. Payment of such an approved individual assessment determination shall constitute full and complete payment of the project's proportionate share of system improvements as individually levied by Jones County, and shall be deemed to be in compliance with the requirements of this article.

(d) *Fee certification.* Upon application to the administrator, a developer may receive a certification of the development impact fee schedule attached hereto and incorporated herein as Attachment A or a certified fee for a particular project, as applicable. Such certified schedule or fee shall establish the development impact fee due for a period of 180 days from the date of certification, even if new or revised rate schedules are adopted in the interim.
(Ord. No. 200810-1o, § 5, 10-7-2008)

Sec. 52-26. Exemptions.

(a) *Exemption policy.* Jones County recognizes that certain office, retail trade and industrial development projects provide extraordinary benefit in support of the economic advancement of the county's citizens over and above the access to jobs, goods and services that such uses offer in general.

(1) To encourage such development projects, the board of commissioners may consider granting a reduction in the impact fee for such a development project upon the determination and relative to the extent that the business or project represents extraordinary economic development and employment growth of public benefit to Jones County, in accordance with adopted exemption criteria.

(2) It is also recognized that the cost of system improvements otherwise foregone through exemption of any impact fee must be funded through revenue sources other than impact fees.

(b) *Process for exemption approval.* An application for exemption shall be considered under the following procedures:

(1) Application for exemption approval must be made by the building permit applicant to the administrator. A building permit may be issued upon approval of an exemption, or may be issued without payment of applicable impact fees following receipt of a complete exemption application and pending its approval, but a certificate of occupancy shall not be issued until a decision regarding the exemption has been made, or until such time that the application for exemption is otherwise withdrawn by the applicant and payment of impact fees have been paid.

(2) Documentation must be provided to the administrator that demonstrates the applicant's eligibility for an exemption. This documentation shall address, but need not be limited to, all applicable exemption criteria adopted by the county. This documentation constitutes the application for exemption.

(3) The administrator in his or her sole discretion shall determine whether an application for exemption addresses the exemption criteria adopted by the county and is complete. A negative determination by the administrator may be appealed to the board of commissioners in accordance with the administrative appeals section of this article.

(4) The administrator or the board of commissioners shall determine the eligibility for and extent of exemption, in accordance with the standards and procedures contained in the exemption criteria adopted by the board of commissioners. If action by the board of commissioners is required, the application for exemption shall be considered at the next regularly scheduled meeting of the board of commissioners that falls at least two weeks after a complete application for exemption has been received by the administrator.

(Ord. No. 200810-1o, § 6, 10-7-2008)

Sec. 52-27. Deposit and expenditure of fees.

(a) *Maintenance of funds.*

(1) All development impact fee funds collected for future expenditure on construction or expansion of facilities pursuant to this article shall be maintained in one or more interest-bearing accounts until encumbered or expended. Restrictions on the investment of development impact fee funds shall be the same that apply to investment of all such funds generally.

(2) Separate accounting records shall be maintained for each category of system improvements within each service area wherein fees are collected.

(3) Interest earned on development impact fees shall be considered funds of the account on which it is earned and shall be subject to all restrictions placed on the use of development impact fees under this article.

(b) *Expenditures; restrictions.*

(1) Expenditures from the impact fee accounts shall be made only for the category of system improvements within the service area for which the development impact fee was assessed and collected.

(2) Except as provided below, development impact fees shall not be expended for any purpose that does not involve building or expanding system improvements that create additional capacity available to serve new growth and development.

(3) Notwithstanding anything to the contrary in this article, the following shall be considered general revenue of Jones County, and may be expended accordingly:

a. Impact fees collected to recover the present value of excess capacity in existing system improvements;

b. Any portion of an impact fee collected as a repayment for expenditures made by Jones County for system improvements intended to be funded by such impact fee; and,

c. Any portion of the impact fee (but not to exceed three percent of the total) collected and allocated by the administrator for administration of the impact fee ordinance, and such additional amount assessed for repayment of the cost of preparing the capital improvements element of the comprehensive plan.

(c) *Annual report.*

(1) The administrator shall prepare an annual report to the board of commissioners as part of the annual audit describing the amount of any development impact fees collected, encumbered, and used during the preceding fiscal year by category of public facility and service area.

(2) Such annual report shall be prepared following guidelines of the Georgia Department of Community Affairs (DCA), and submitted to DCA in conjunction with the annual update of the capital improvements element of the comprehensive plan.

(Ord. No. 200810-1o, § 7, 10-7-2008)

Sec. 52-28. Credits.

When eligible, feepayors shall be entitled to a credit against impact fees otherwise due and owing under the circumstances and in the manner set forth in this section.

(a) *Credits; restrictions.*

(1) Except as provided in subsection (2) below, no credit shall be given for construction, contribution, or dedication of any system improvement or funds for system improvements made before the effective date of this article.

(2) If the value of any construction, dedication of land, or contribution of money made by a developer (or his or her predecessor in title or interest) prior to the effective date of this article for system improvements that are included for impact fee funding in the capital improvements element of the comprehensive land use plan, is greater than the impact fee that would otherwise have been paid for the project, then the developer shall be entitled to a credit for such excess construction, dedication, or funding. Notwithstanding anything to the contrary in this article, any credit due under this section shall not constitute a liability of Jones County, and shall accrue to the developer to the extent of impact fees assessed for new development for the same category of system improvements within the same service area.

(3) In no event shall credit be given for project improvements, or for system improvements not included for impact fee funding in the capital improvements element of the comprehensive plan.

(b) *Granting of credits.*

(1) Credit shall be given for the present value of any construction of improvements, contribution or dedication of land, or payment of money by a developer or his or her predecessor in title or interest for system improvements of the same public facilities category and in the same service area for which a development impact fee is imposed, provided that:

a. The system improvement is included for impact fee funding in the capital improvements element of the comprehensive land use plan;

b. The amount of the credit does not exceed the portion of the system improvement's cost that is eligible for impact fee funding, as shown in the capital improvements element; and,

c. The board of commissioners shall have explicitly approved said improvement, contribution, dedication, or payment and the value thereof prior to its construction, dedication, or transfer.

(2) The credit allowed pursuant to this section shall not exceed the impact fee due for such system improvement unless a greater credit is authorized under a private agreement executed under the provisions of section 52-29 of this article.

(c) *Guidelines for credit valuation.* Credits under this Section shall be valued using the following guidelines:

(1) For the construction of any system improvements by a developer or his or her predecessor in title or interest and accepted by the county, the developer must present evidence satisfactory to the administrator of the original cost of the improvement, from which present value may be calculated.

(2) For any contribution or dedication of land for system improvements by a developer or his or her predecessor in title or interest and accepted by the county, the original value of the land shall be the same as that attributed to the property by the validated tax appraisal at the time of dedication, from which present value may be calculated.

(3) For any contribution of capital equipment that qualifies as a system improvement by a developer or his or her predecessor in title or interest and accepted by the county, the value shall be the original cost to the developer of the capital equipment or the cost that Jones County, Georgia would normally pay for such equipment, whichever is less.

(4) For any contribution of money for system improvements from a developer or his or her predecessor in title or interest accepted by the county, the original value of the money shall be the same as that at the time of contribution, from which present value may be calculated.

(5) In making a present value calculation, the discount rate used shall be the net of the interest returned on a State of Georgia, AA rated or better municipal bond less average annual inflation, or such other discount rate as the board of commissioners in its sole discretion may deem appropriate.

(d) *Credits; application.*

(1) Credits shall be given only upon written request of the developer to the administrator. A developer must present written evidence satisfactory to the administrator at or before the time of development impact fee assessment.

(2) The administrator, in his or her sole discretion, shall review all claims for credits and make determinations regarding the allowance of any claimed credit, and the value of any allowed credit.

(3) Any credit approved by the administrator shall be acknowledged in writing by the administrator and calculated at the time of impact fee assessment.

(e) *Credits; abandoned building permits.* In the event that an impact fee is paid but the building permit is abandoned, credit shall be given for the present value of the impact fee against future impact fees for the same parcel of land, upon submission of adequate evidence to the administrator that an impact fee was received by the county, the amount paid, and that the building permit was abandoned.
(Ord. No. 200810-1o, § 8, 10-7-2008)

Sec. 52-29. Refunds.

(a) *Eligibility for a refund.*

(1) Upon the request of a feepayor regarding a property on which a development impact fee has been paid, the development impact fee shall be refunded if:

a. Capacity is available in the public facilities for which the fee was collected but service is permanently denied; or,

b. The development impact fee has not been encumbered or construction has not been commenced within six years after the date the fee was collected.

(2) In determining whether development impact fees have been encumbered, development impact fees shall be considered encumbered on a first-in, first-out (FIFO) basis.

(b) *Notice of entitlement to a refund.* When the right to a refund exists due to a failure to encumber the development impact fees, the administrator shall provide written notice of entitlement to a refund to the feepayor who paid the development impact fee at the address shown on the application for development approval or to a successor in interest who has given adequate notice to the administrator of a legal transfer or assignment of the right to entitlement to a refund and who has provided a mailing address. Such notice shall also be published in a newspaper of general circulation in Jones County within 30 days after the expiration of the six-year period after the date that the development impact fee was collected and shall contain a heading "Notice of Entitlement to Development Impact Fee Refund." No refund shall be made for a period of 30 days from the date of said publication.

(c) *Filing a request for a refund.* all requests for refunds shall be made in writing to the administrator within one year of the time the refund becomes payable or within one year of publication of the notice of entitlement to a refund, whichever is later. Failure to make a claim for a refund within said time period shall result in a waiver of all claims to said funds.

(d) *Payment of refunds.*

(1) All refunds shall be made to the feepayor within 60 days after it is determined by the administrator that a sufficient proof of claim for refund has been made, but no sooner than 30 days after publication of the notice of entitlement to the refund.

(2) A refund shall include a refund of a pro rata share of interest actually earned on the unused or excess impact fee collected.

(3) In no event shall a feepayor be entitled to a refund for impact fees assessed and paid to recover the cost of excess capacity in existing system improvements, for any portion

of an impact fee collected as a repayment for expenditures made by Jones County for system improvements intended to be funded by such impact fee, or for that portion of the fee payment that was assessed for administration of the impact fee ordinance or for recovery of the cost of preparation of the capital improvements element of the comprehensive plan.

(Ord. No. 200810-1o, § 9, 10-7-2008)

Sec. 52-30. Private contractual agreements.

(a) *Private agreements; authorized.* Nothing in this article shall prohibit the voluntary mutual approval of a private contractual agreement between the county and any developer or property owner or group of developers and/or property owners in regard to the construction or installation of system improvements and providing for credits or reimbursement for system improvement costs incurred by a developer, including interproject transfers of credits or providing for reimbursement for project improvement costs which are used or shared by more than one development project, provided that:

(1) The system improvements are included for impact fee funding in the capital improvements element of the comprehensive plan; and,

(2) The amount of any credit or reimbursement granted shall not exceed the portion of the system improvement's cost that is eligible for impact fee funding.

(b) *Private agreements; provisions.* A private contractual agreement for system improvements may include, but shall not be limited to, provisions which:

(1) Modify the estimates of impact on public facilities according to the methods and provisions concerning the calculation of impact fees, provided that any such agreement shall allow the county to assess additional development impact fees after the completion of construction according to schedules set forth in this article.

(2) Permit construction of, dedication of property for, or other in-kind contribution for specific public facilities of the type for which development impact fees would be imposed in the same service area in lieu of or with a credit against applicable development impact fees.

(3) Permit a schedule and method of payment appropriate to particular and unique circumstances of a proposed project in lieu of the requirements for payment under this article, provided that acceptable security is posted ensuring payment of the development impact fees. Forms of security that may be acceptable include a cash bond, irrevocable letter of credit from a bank authorized to do business within the State of Georgia, a surety bond, or lien or mortgage on lands to be covered by the building permit.

(c) *Private agreements; procedure.*

(1) Any private agreement proposed by an applicant pursuant to this section shall be submitted to the administrator for review, negotiation, and submission to the board of commissioners.

(2) Any such agreement must be presented to and approved by the Board of Commissioners of Jones County, Georgia prior to the issuance of a building permit.

(3) Any such agreement shall provide for execution by mortgagees, lien holders or contract purchasers in addition to the landowner, and shall require the applicant to submit such agreement to the clerk of superior court for recording.

(Ord. No. 200810-1o, § 10, 10-7-2008)

Sec. 52-31. Periodic review and amendments.

(a) *Ordinance amendments.*

(1) This article may be amended from time to time as deemed appropriate or desirable.

(2) Interim amendments to the impact fee schedule regarding the establishment of new land use categories by the administrator under subsection 52-25(c)3.c are expressly authorized, and shall be confirmed by the board of commissioners when this article is subsequently amended.

(b) *Capital improvements element periodic review.*

(1) *Update.* At least once each year, the board of commissioners shall review and may update the capital improvements element so as to maintain, at a minimum, a schedule of system improvements for each of the subsequent five years. The capital improvements element update may include changes in funding sources or project costs, or changes in the list or scheduling of projects. The capital improvements element update shall be submitted to the regional development center for their review, in accordance with the development impact fee compliance requirements as adopted by the Board of Community Affairs of the State of Georgia.

(2) *Amendment.* In conducting a periodic review of the capital improvements element and calculation of development impact fees, the board of commissioners may determine to amend the capital improvements element. Amendments to the capital improvements element shall comply with the procedural requirements of the development impact fee compliance requirements as adopted by the Board of Community Affairs of the State of Georgia, and shall be required for any change to the capital improvements element that would:

a. Redefine growth projections, land development assumptions, or goals or objectives that would affect system improvements proposed in the capital improvements element;

b. Add new public facility categories for impact fee funding, modify impact fee service areas or make changes to system improvement projects;

c. Change service levels established for an existing impact fee service area; or

d. Make any other revisions needed to keep the capital improvements element up to date.

(c) *Continuation of validity.* Failure of the board of commissioners to undertake a periodic review of the capital improvements element shall result in the continued use and application of the latest adopted development impact fee schedule and other data. The failure to periodically review such data shall not invalidate this article.
(Ord. No. 200810-1o, § 11, 10-7-2008)

Sec. 52-32. Administrative appeals.

(a) *Eligibility to file an appeal.* Only applicants or feepayors who have already been assessed an impact fee by the county or who have already received a written determination of individual assessment, refund or credit amount shall be entitled to an appeal.

(b) *Appeals process.*

(1) The aggrieved applicant or feepayor (hereinafter, the "appellant") must file a written appeal with the administrator within 15 days of the decision or receipt of written determination from which the appeal is taken.

(2) Such written appeal shall constitute an application for relief, shall be of sufficient content to set forth the basis for the appeal and the relief sought, and shall include:

a. The name and address of the appellant;

b. The location of the affected property;

c. A copy of any applicable written decision or determination made by the administrator (from which the appeal is taken);

(3) Within 15 days after receipt of the appeal, the administrator shall make a written final decision with respect to the appeal, such decision to be of sufficient content to set forth the basis for the determination.

(4) Appeals from the final decision of the administrator shall be made to the board of commissioners within 30 days of receipt by the appellant of the administrator's decision. Delivery by hand or certified mail to, or posting upon the property at, the address given by the appellant in the application for relief shall constitute "receipt by the appellant" under this provision.

(5) The board of commissioners shall thereafter hold a hearing on the appeal within 30 days provided that at least two weeks written notice thereof can be given to the appellant. The board of commissioners shall decide the issue within a reasonable time following the hearing, but in no case more than 15 days following the hearing, unless the appellant agrees to an extension to a later date. Any party making an appeal shall have the right to appear at the hearing to present evidence and may be represented by counsel.

(c) *Payment of impact fee during appeal.*

(1) The filing of an appeal shall not stay the collection of a development impact fee as a condition to the issuance of development approval.

(2) A developer may pay a development impact fee under protest to obtain a development approval, and by making such payment shall not be stopped from exercising this right of appeal or receiving a refund of any amount deemed to have been collected in excess.

(Ord. No. 200810-1o, § 12, 10-7-2008)

Sec. 52-33. Enforcement and penalties.

(a) *Enforcement authority.*

(1) The enforcement of this article shall be the responsibility of the administrator and such personnel as the administrator may designate from time to time.

(2) The administrator shall have the right to inspect the lands affected by this article and shall have the right to issue a written notice, a stop work order or citation for violations, as the administrator in his or her sole determination may deem appropriate to the circumstances. Refusal of written notice of violation, stop work order or citation under this article shall constitute legal notice of service. The citation shall be in the form of a written official notice issued in person or by certified mail to the owner of the property, or to his or her agent, or to the person performing the work. The receipt of a citation shall require that corrective action be taken within 30 days unless otherwise extended at the discretion of the administrator.

(3) The administrator may suspend or revoke any building permit or withhold the issuance of other development approvals. If the provisions of this article have been violated by the developer or the owner or their assigns.

(b) *Violations.*

(1) Knowingly furnishing false information on any matter relating to the administration of this article shall constitute an actionable violation.

(2) Proceeding with construction of a project that is not consistent with the project's impact fee assessment, such as the use category claimed or units of development indicated, shall constitute an actionable violation.

(3) Failure to take corrective action following the receipt of a citation shall constitute an actionable violation.

(4) A violation of this article shall be a misdemeanor punishable according to law, including the general penalty provisions of the Jones County Code of Ordinances Section 1-11. In addition to or in lieu of criminal prosecution, the board of commissioners shall have the power to sue in law or equity for relief in civil court to enforce this article, including recourse to such civil and criminal remedies in law and equity as may be necessary to ensure compliance with the provisions of this article, including but not limited to injunctive relief to enjoin and restrain any person from violating the provisions of this article and to recover such damages as may be incurred by the implementation of specific corrective actions.

(Ord. No. 200810-1o, § 13, 10-7-2008)

Sec. 52-34. Repealer, severability, and effective date.

(a) *Repeal of conflicting laws.* Any and all ordinances, resolutions, or regulations, or parts thereof, in conflict with this article are hereby repealed to the extent of such conflict.

(b) *Severability.* If any sentence, clause, part, paragraph, section, or provision of this article is declared by a court of competent jurisdiction to be invalid, the validity of the artice as a whole or any other part hereof shall not be affected.

(c) *Incorporation by reference of Georgia Law.* It is the intent of the board of commissioners that the Development Impact Fee Ordinance of Jones County, Georgia comply with the terms and provisions of the Georgia Development Impact Fee Act (O.C.G.A. 36-71-1 et seq. as amended). To the extent that any provision of this article is inconsistent with the provisions of said Chapter 36-71, the latter shall control. Furthermore, to the extent that this article is silent as to any provision of said Chapter 36-71 that is otherwise made mandatory by said Chapter 36-71, such provision shall control and shall be binding upon the county.

(d) *Effective date.* This article shall take effect on July 1, 2009.
(Ord. No. 200810-1o, § 14, 10-7-2008)

APPENDIX A. FEE SCHEDULE

This fee schedule relects the adoption of an impact fee schedule that is 0 percent of the maximum allowable impact fee, as calculated in the January 7, 2008 Jones county Impact Fee Methodology Report.

JONES COUNTY IMPACT FEE SCHEDULE

Net Impact Fee								
Land Use Category	*Library*	*Parks & Recreation*	*EMA*	*Sheriff's Office*	*Subtotal*	*Administration (3%)*	*TOTAL IMPACT FEE*	*Unit of Measure**
Residential								
Single-Family Detached Housing	0	0	0	0	$0	0	$0	per dwelling
Apartment	0	0	0	0	$0	0	$0	per dwelling
Residential Condominum/Townhouse	0	0	0	0	$0	0	$0	per dwelling
Port and Terminal								
Truck Terminal	-	-	0	0	$0	0	$0	per acre
Industrial								
General Light Industrial	-	-	0	0	$0	0	$0	per square foot
General Heavy Industrial	-	-	0	0	$0	0	$0	per square foot
Manufacturing	-	-	0	0	$0	0	$0	per square foot

Net Impact Fee								
Land Use Category	*Library*	*Parks & Recre-ation*	*EMA*	*Sheriff's Office*	*Subtotal*	*Adminis-tration (3%)*	*TOTAL IMPACT FEE*	*Unit of Mea-sure**
Warehousing	-	-	0	0	$0	0	$0	per square foot
Mini-Warehouse	-	-	0	0	$0	0	$0	per square foot
High-Cube Warehouse	-	-	0	0	$0	0	$0	per square foot
Lodging								
Hotel	-	-	0	0	$0	0	$0	per room
All Suites Hotel	-	-	0	0	$0	0	$0	per room
Business Hotel	-	-	0	0	$0	0	$0	per room
Motel	-	-	0	0	$0	0	$0	per room
Recreational								
Campground/ Recreational Vehicle Park	-	-	0	0	$0	0	$0	per camp site
Golf Course	-	-	0	0	$0	0	$0	per acre
Multipurpose Recreational Facility	-	-	0	0	$0	0	$0	per acre
Movie Theater	-	-	0	0	$0	0	$0	per square foot
Arena	-	-	0	0	$0	0	$0	per acre
Amusement Park	-	-	0	0	$0	0	$0	per acre
Tennis Courts	-	-	0	0	$0	0	$0	per acre
Racquet Club	-	-	0	0	$0	0	$0	per square foot
Bowling Alley	-	-	0	0	$0	0	$0	per square foot
Recreational Com-munity Center	-	-	0	0	$0	0	$0	per square foot
Institutional								
Private School (K-12)	-	-	0	0	$0	0	$0	per square foot
Church/Synagogue	-	-	0	0	$0	0	$0	per square foot
Day Care Center	-	-	0	0	$0	0	$0	per square foot
Cemetery	-	-	0	0	$0	0	$0	per acre
Lodge/Fraternal Organization	-	-	0	0	$0	0	$0	per employee
Medical								
Hospital	-	-	0	0	$0	0	$0	per square foot
Nursing Home	-	-	0	0	$0	0	$0	per bed

Net Impact Fee								
Land Use Category	*Library*	*Parks & Recre-ation*	*EMA*	*Sheriff's Office*	*Subtotal*	*Adminis-tration (3%)*	*TOTAL IMPACT FEE*	*Unit of Mea-sure**
Clinic	-	-	0	0	$0	0	$0	per employee
Office								
General Office Build-ing	-	-	0	0	$0	0	$0	per square foot
Corporate Headquarters Build-ing	-	-	0	0	$0	0	$0	per square foot
Single-Tenant Office Building	-	-	0	0	$0	0	$0	per square foot
Medical-Dental Office Building	-	-	0	0	$0	0	$0	per square foot
Research and Development Center	-	-	0	0	$0	0	$0	per square foot
Retail								
Building Materials and Lumber Store	-	-	0	0	$0	0	$0	per square foot
Free-Standing Discount Superstore	-	-	0	0	$0	0	$0	per square foot
Specialty Retail Center	-	-	0	0	$0	0	$0	per square foot
Free-Standing Discount Store	-	-	0	0	$0	0	$0	per square foot
Hardware/Paint Store	-	-	0	0	$0	0	$0	per square foot
Nursery (Garden Center)	-	-	0	0	$0	0	$0	per square foot
Nursery (Wholesale)	-	-	0	0	$0	0	$0	per square foot
Shopping Center	-	-	0	0	$0	0	$0	per square foot
Factory Outlet Center	-	-	0	0	$0	0	$0	per square foot
Quality Restaurant	-	-	3.840	2.994	$6.834	0.205	$4.53	per square foot
High-Turnover (Sit-Down) Restaurant	-	-	0	0	$0	0	$0	per square foot
Fast-Food Restaurant	-	-	0	0	$0	0	$0	per square foot
Quick Lubrication Vehicle Shop	-	-	0	0	$0	0	$0	per service bay
Auto-Care Center	-	-	0	0	$0	0	$0	per square foot
New Car Sales	-	-	0	0	$0	0	$0	per square foot
Auto Parts Store	-	-	0	0	$0	0	$0	per square foot
Self-Service Car Wash	-	-	0	0	$0	0	$0	per stall
Tire Store	-	-	0	0	$0	0	$0	per square foot
Wholesale Tire Store	-	-	0	0	$0	0	$0	per square foot

Net Impact Fee								
Land Use Category	*Library*	*Parks & Recre-ation*	*EMA*	*Sheriff's Office*	*Subtotal*	*Adminis-tration (3%)*	*TOTAL IMPACT FEE*	*Unit of Mea-sure**
Supermarket	-	-	0	0	$0	0	$0	per square foot
Convenience Market (Open 24 Hours)	-	-	0	0	$0	0	$0	per square foot
Convenience Market (Open 15-16 Hours)	-	-	0	0	$0	0	$0	per square foot
Convenience Market with Gasoline Pumps	-	-	0	0	$0	0	$0	per square foot
Wholesale Market	-	-	0	0	$0	0	$0	per square foot
Discount Club	-	-	0	0	$0	0	$0	per square foot
Home Improvement Superstore	-	-	0	0	$0	0	$0	per square foot
Electronics Superstore	-	-	0	0	$0	0	$0	per square foot
Apparel Store	-	-	0	0	$0	0	$0	per square foot
Pharmacy/Drugstore	-	-	0	0	$0	0	$0	per square foot
Furniture Store	-	-	0	0	$0	0	$0	per square foot
Services								
Drive-in Bank	-	-	0	0	$0	0	$0	per square foot

(Ord. No. 200810-1o, Att. A, 10-7-2008; Ord. No. 20174-1o, § 1, 4-18-2017)

Chapter 53

RESERVED

Chapter 54

OFFENSES AND MISCELLANEOUS PROVISIONS*

Sec. 54-1. Disorderly conduct.
Sec. 54-2. Loitering or prowling.
Sec. 54-3. Mailbox regulations.
Sec. 54-4. Public parks, recreation facilities, and cemeteries; hours of operation.

***Cross reference—**Traffic and vehicles, ch. 70.

State law references—Criminal Code of Georgia, O.C.G.A. § 16-1-1 et seq.; limitation on home rule powers of municipal corporations with respect to duplication of state criminal offenses, O.C.G.A. § 36-35-6(a)(2).

Sec. 54-1. Disorderly conduct.

It shall be unlawful for any person within the unincorporated area of the county to engage in any of the following activities:

(1) Act in a violent or tumultuous manner toward another whereby any person is placed in fear of the safety of his life, limb, or health.

(2) Act in a violent or tumultuous manner toward another whereby the property of any person is placed in danger of being damaged or destroyed.

(3) Cause, provoke or engage in any fight, brawl or riotous conduct so as to endanger the life, limb, health, or property of another.

(4) Assemble or congregate with another or others for the purpose of or with the intent to engage in gaming.

(5) Be in or about any place, along or with another or others with the purpose of or intent to engage in any fraudulent scheme, trick or device to obtain any money or valuable thing; or to aid or abet any person in doing so.

(6) Be in or about any place where gaming or the illegal sale or possession of alcoholic beverages or narcotics or dangerous drugs (controlled substances) is practiced, allowed or tolerated, for the purpose of or intent to engage in gaming or the purchase, use, possession or consumption of such illegal drugs, narcotics or alcoholic beverages.

(7) Direct fighting words toward another, that is, words which by their very nature tend to incite a breach of the peace.

(8) Interfere, by acts of physical obstruction, with another's pursuit of a lawful occupation.

(9) Congregate with another or others in or on any public way or grounds so as to halt the flow of vehicular or pedestrian traffic, and to fail to clear that public way or grounds after being ordered to do so by a county law enforcement officer or other lawful authority.

(10) Disrupt by actions which tend to incite a breach of peace the activities of any house of worship, hospital, home for the elderly or any lawful meeting, gathering, or procession.

(11) Throw bottles, paper, cans, glass, sticks, stones, missiles, or any other debris on public property.

(12) Be and appear in an intoxicated condition in any public place or within the curtilage of any private residence not their own other than by invitation of the owner or lawful occupant, which condition is made manifest by boisterousness, by indecent condition or act, or by vulgar, profane, or loud unbecoming language.

(Ord. of 12-11-1995, § A)

Sec. 54-2. Loitering or prowling.

(a) A person commits the offense of loitering or prowling when that person is in a place, at a time or in a manner not usual for law-abiding individuals, under circumstances that warrant a justifiable and reasonable alarm or immediate concern for the safety of persons or property in the vicinity or under circumstances which cause a justifiable and reasonable alarm or immediate concern that such person is involved in unlawful activity.

(b) The circumstances which may be considered in determining whether alarm or concern is warranted include, but are not limited to, the following:

(1) Taking flight upon the appearance of a law enforcement officer;

(2) Refusing to identify oneself; or

(3) Manifestly endeavoring to conceal oneself or any object.

(c) Unless flight by the person or other circumstances makes it impractical, a law enforcement officer shall, prior to arrest for an offense under this section, afford the person an opportunity to dispel any alarm or immediate concern which would otherwise be warranted by allowing the person to produce satisfactory identification and an explanation of that person's presence and conduct.

Sec. 54-3. Mailbox regulations.

No mailbox or decorative structure will be allowed to exist on county road right of ways if it interferes with the safety of the traveling public. Mailboxes should be constructed in accordance with the rules and regulations of the postmaster general.

Support or post must not be made of masonry or other material that will not yield upon impact. A support that will not readily yield upon impact will be considered a hazardous or fixed object and will not be allowed on county road right-of-ways.

Using wood as a mailbox support, the maximum diameter should not exceed four inches if square. Metal posts should be hollow and no larger than three inches in diameter or three by there inches if square.

All masonry structures that support mailboxes constructed before July 19, 2005, will be considered "Grand fathered" unless they constitute a danger to traffic, in which event they shall be removed.
(Ord. of 7-19-2005)

Sec. 54-4. Public parks, recreation facilities, and cemeteries; hours of operation.

(a) The hours of operation for all public parks, recreation facilities, and cemeteries shall be from sunrise until sundown; however, the hours may be adjusted by the director of the parks and recreation department of the county. No person shall remain in or upon the grounds of any public park, recreation facility, or cemetery during the hours when such public park, recreation facility, or cemetery is closed.

(b) Any person convicted of a violation of this section shall be punished as provided in section 1-19.

(c) This section may be enforced by any authorized law enforcement officer of Jones County or the Jones County Administrator and/or his designee. Where there has been a violation of this section, the law enforcement officer in his discretion may issue a citation or warning and/or order the person to leave the park, recreation facility, or cemetery.
(Ord. No. 2009-001, 12-1-2009)

Chapters 55—57

RESERVED

Chapter 58

ROADS*

Article I. In General

Secs. 58-1—58-30. Reserved.

Article II. Driveway Installation Policy

Sec. 58-31. Permit required.
Sec. 58-32. Design criteria for driveways.
Sec. 58-33. Inspection.
Sec. 58-34. Minimum dimensions.
Sec. 58-35. Permit fees.
Sec. 58-36. Installation of culverts on the county's right-of-way.
Sec. 58-37. Exemptions.
Secs. 58-38—58-60. Reserved.

Article III. Roads and Rights-of-Way Usage

Sec. 58-61. Scope.
Sec. 58-62. Definitions.
Sec. 58-63. Notification required.
Sec. 58-64. Reserved.
Sec. 58-65. Inspection.
Sec. 58-66. Surety bond.
Sec. 58-67. Suspension of operations.
Sec. 58-68. Penalties and incentives.
Sec. 58-69. Logging, chipping and pulpwood specifics.
Secs. 58-70—58-100. Reserved.

Article IV. Reserved

Secs. 58-101—58-106. Reserved.

***Cross references—**Buildings, construction and related activities, ch. 18; environment, ch. 34; floods, ch. 42; water and sewers, ch. 74; comprehensive land development, app. A.

State law references—State, county and municipal road systems, O.C.G.A. § 32-4-1 et seq.; authority to construct and maintain roads, including curbs, sidewalks, street lights and devices to control the flow of traffic, Ga. Const. art. IX, § II, ¶ III(a)(4).

ARTICLE I. IN GENERAL

Secs. 58-1—58-30. Reserved.

ARTICLE II. DRIVEWAY INSTALLATION POLICY*

Sec. 58-31. Permit required.

Prior to installing a new driveway or private roadway leading to or from public roads of Jones County, the owners of said private roadways or driveways shall apply for a permit from the county public works department or its designated agent. The application fee for the permit is $35.00 and is non-refundable.
(Ord. No. 200902-1o, 2-3-2009)

Sec. 58-32. Design criteria for driveways.

Driveways must be designed to prevent excess water from entering the public roads of the county and, if required by the public works director or his designated agent, the property owner must take whatever action is necessary to satisfy this requirement before a permit is issued.
(Ord. No. 200902-1o, 2-3-2009)

Sec. 58-33. Inspection.

The public works director or his designated agent shall inspect the proposed driveway or private roadway location prior to the commencement of any construction related to the new driveway or private roadway. The director or his agent shall determine what size of culvert, if any, will be required for the area located within the county's right-of-way.
(Ord. No. 200902-1o, 2-3-2009)

Sec. 58-34. Minimum dimensions.

All culverts installed on the county's right-of-way shall have a minimum diameter of 15 inches and a minimum length of 24 feet. Any exceptions to said measurements must be approved by the public works director or his designated agent.
(Ord. No. 200902-1o, 2-3-2009)

Sec. 58-35. Permit fees.

After the location of the new driveway or private roadway has been inspected by the public works director or his designated agent, the owner may obtain an approved driveway permit. If the public works director or his designated agent determine that a culvert shall not be

---

***Editor's note—**Ord. No. 200902-1o, adopted Feb. 3, 2009, deleted Art. II in its entirety and enacted a new Art. II to read as set out herein. Former Art. II pertained to culvert installation policy and derived from an ordinance adopted Sept. 15, 1998; and an ordinance adopted Jan. 7, 2003.

required for the proposed location, no further charges shall be assessed. If a culvert is required within the county's right-of-way, a fee which includes the cost of materials and labor shall be charged in accordance with the current fee schedule as adopted by the Jones County Board of Commissioners. Once this fee has been paid, the public works department may install the culvert.
(Ord. No. 200902-1o, 2-3-2009)

Sec. 58-36. Installation of culverts on the county's right-of-way.

Only the public works department may install culverts on the county's right-of-way for new driveways and private roadways that intersect public roads in Jones County. Any other method of installation is prohibited. If a culvert has been installed by someone other than the public works department, the public works director or his designated agent shall inspect the culvert to determine if it will need to be removed or if it can remain in place. If it is determined that the culvert is unacceptable, the property owner will need to remove the culvert immediately. If the public works director or his designated agent determines that the culvert is presenting an immediate threat to the public, the county will remove the culvert at the property owner's expense. If the culvert is determined to be acceptable, the property owner will still have to pay in full the fees as described in section 58-35, including the cost of the complete installation.
(Ord. No. 200902-1o, 2-3-2009)

Sec. 58-37. Exemptions.

Nothing in this article shall apply to new subdivision roads that are intended for public use, or new private roads that are built to public road standards.
(Ord. No. 200902-1o, 2-3-2009)

Secs. 58-38—58-60. Reserved.

ARTICLE III. ROADS AND RIGHTS-OF-WAY USAGE

Sec. 58-61. Scope.

This article shall cover any business enterprise or commercial entity that uses a county road or its right-of-way in carrying out its business activities, including loading or unloading materials of any nature or crossing the right-of-way of any county road including its ditches or embankments.
(Ord. of 7-21-1998, § I(1); Ord. of 5-6-2003, § I(1); Ord. No. 201506-1o, 6-16-2015)

Sec. 58-62. Definitions.

Business enterprise and *commercial entity* mean any commercial activity conducted by an individual, partnership, corporation or any other business enterprise whether or not conducted for pecuniary gain or profit.

Heavy equipment, heavy machinery and *heavy vehicles* shall be defined in their everyday meaning.

Loading or *unloading* shall be defined in their everyday meaning, but also shall include any activity known as harvesting or mining of any product or material.
(Ord. of 7-21-1998, § I(2); Ord. of 5-6-2003, § I(2); Ord. No. 201506-1o, 6-16-2015)

Sec. 58-63. Notification required.

(a) All persons or firms harvesting standing timber in any unincorporated area of such county for delivery as pulpwood, logs, poles, posts, or wood chips to any wood yard or processing plant located inside or outside this state is to provide notice of such harvesting operations to the county governing authority or the designated agent thereof prior to entering onto the property if possible, but in no event later than 24 hours after entering onto the property. Further, such persons shall give notice of cessation of cutting within 24 hours after the job is completed. Notice may be submitted in person, by transmission of an electronic record via tele facsimile, e-mail, or such other means as approved by the governing authority, or by mail.

(1) The name, address and phone number of the business entity which will be loading and unloading;

(2) The approximate location of the access site to the county road;

(3) The approximate date to commence work and the approximate completion date;

(4) The type of materials to be loaded or unloaded.

(b) A notice of timber harvesting activity form must be resubmitted 48 hours prior to reentering a site where harvesting has been suspended.
(Ord. of 7-21-1998, § I(3); Ord. of 5-6-2003, § I(3); Ord. No. 2009-05, 7-7-2009; Ord. No. 201506-1o, 6-16-2015)

Sec. 58-64. Reserved.

Editor's note—Ord. No. 201506-1o, adopted June 16, 2016, repealed § 58-64, which pertained to road access fee required and derived from Ord. of 7-21-1998, and Ord. of 5-6-2003.

Sec. 58-65. Inspection.

(a) Prior to the commencement of operations, a designee of the county administrator shall inspect the access site to determine if a culvert is required along the right-of-way and the size and length of the culvert, if any is required. If a culvert is required, it shall be installed as directed by the designee and at the expense of the business entity that paid the road access fee. Unless waived by the designee, access onto public roads shall have stone pads. The applicant shall be responsible for a stone pad at the access point to stop any dirt and mud from adhering to county roads. Any dirt brought onto county roads shall be removed immediately so as not to destroy improved surfaces or endanger passing vehicles.

(b) At completion of harvest, contractors must restore the ditch line, back slopes and road shoulders to their original condition or better. Further, such persons shall give notice of cessation of cutting within 24 hours after the job is completed. The site will be inspected by the designee within 48 hours. If at this time, access sites are not in proper repair, operators will make the required repairs at his expense. Operators shall remove temporary culverts they installed by completion of the project.
(Ord. of 7-21-1998, § I(5); Ord. of 5-6-2003, I(5); Ord. No. 2009-05, 7-7-2009; Ord. No. 201506-1o, 6-16-2015)

Sec. 58-66. Surety bond.

(a) The board of commissioners is hereby authorized to require the posting of a surety bond or irrevocable letter of credit in the amount of $3,000.00 by the company, corporation or individual asking for an access site or otherwise utilizing a county right-of-way for the stated purpose in this article. The bond will remain in force until the conclusion of operations with the condition of access sites and county roads being found satisfactory as described by this article.

(b) Otherwise, a valid replacement bond must be obtained and delivered to the governing authority of such county or municipality or its designated agent no later than the close of business on the fifth business day following the day that such governing authority filed a claim to recover damages against the then-existing bond. Upon filing such claim, such governing authority shall immediately provide notice thereof, including the date such claim was filed, to the person or firm causing the damage. Such notice may be given in person, by transmission of an electronic record via tele facsimile, or by e-mail.

(c) The surety bond shall be conditioned upon the faithful performance of all requirements of this article, the violation of which shall authorize the forfeiture of such amount of the bond as may be required to repair any damage caused to any county road or right-of-way. However, the posting of a suitable bond shall not relieve the principal for any liability for damages over and above the actual amount of any such damages.
(Ord. of 7-21-1998, § I(6); Ord. of 5-6-2003, § I(6); Ord. No. 200504-1o, 5-17-2005; Ord. No. 201506-1o, 6-16-2015)

Sec. 58-67. Suspension of operations.

The designee shall have the authority to require any company, corporation or individual to cease operations when:

(1) The designee determines that access sites have not been properly installed or maintained;

(2) The designee determines that delivery or transport vehicles traveling over any county roads are causing damage to the road such that road conditions for the passage of smaller and lighter passenger vehicles has been substantially hampered, whether due to rain, inclement weather or otherwise;

(3) The designee determines that the use of county roads by delivery or transport vehicles is significantly damaging the roadways of such roads, whether due to rain, inclement weather, or otherwise;

(4) The company, corporation or individual has not posted the required surety bond or irrevocable letter of credit; or

(5) The company, corporation or individual has not submitted a notice of timber harvesting activity form.

(Ord. of 7-21-1998, § I(7); Ord. of 5-6-2003, § I(7); Ord. No. 201506-1o, 6-16-2015)

Sec. 58-68. Penalties and incentives.

Any individual, company or other business enterprise who shall violate a provision of this article, or fail to comply therewith, or with any of the requirements thereof, shall be guilty of a misdemeanor, an offense punishable by the magistrate court. Each such person shall be deemed guilty of a separate offense for each and every day or portion thereof during which any violation of any of the provisions of this article is committed or continued, and upon conviction of any such violation such person shall be punished within the limits and as provided by state laws.

(Ord. of 7-21-1998, § II; Ord. of 5-6-2003, § II; Ord. No. 201506-1o, 6-16-2015)

Sec. 58-69. Logging, chipping, and pulpwood specifics.

(a) All log loading, chipping or pulpwood loading operations shall be conducted at a loading site off of the county road right-of-way and behind the established ditch line of the county roads.

(b) Loading or skidding of logs or pulpwood will not be permitted on the county roads or their rights-of-way.

(c) County road ditches at the access site shall be kept clear of all debris or residue at all times to allow for proper drainage.

(d) County roadways at the access site shall be kept clear of company, corporation or individually owned vehicles and the roadway must be kept in a clean and serviceable condition at all times so as not to restrict the passage of other vehicles using the roadway.

(e) The access site of logging, chipping, and pulp wooding operations shall be clearly marked with signs in both directions with the name of the company, corporation or individual and "trucks entering roadway" clearly visible to passing motorists.

(f) When the quantity of harvested wood products is less than 20 cords or 50 tons at any one access site as determined by the designee of the county administrator, a surety bond and use of road signs is not required. The company, corporation, or individual conducting the operations shall be required to follow all other conditions of this article.

(g) During periods of inclement weather, no logging or timber cutting travel shall take place on county roads until passage can be made without damage to county roads.
(Ord. of 7-21-1998, § III; Ord. of 5-6-2003, § III; Ord. No. 2009-05, 7-7-2009; Ord. No. 201506-1o, 6-16-2015)

Secs. 58-70—58-100. Reserved.

ARTICLE IV. RESERVED

Secs. 58-101—58-106. Reserved.

Editor's note—Ord. No. 200902-1o, adopted Feb. 3, 2009, deleted Art. IV, §§ 58-101—58-109, in its entirety. Former Art. IV, §§ 58-101—58-109, pertained to driveways. For a complete history of former Art. IV, §§ 58-101—58-109, see the Code Comparative Table.

Chapters 59—61

RESERVED

Chapter 62

SOLID WASTE*

Article I. In General

Sec. 62-1. Solid waste management plan.
Secs. 62-2—62-30. Reserved.

Article II. Solid Waste and Scrap Tire Management

Sec. 62-31. Definitions.
Sec. 62-32. Waste disposal; general.
Sec. 62-33. Transporting solid waste and litter.
Sec. 62-34. Regulation of all solid waste or litter containers and receptacles.
Sec. 62-35. Regulation of municipal solid waste landfills, inert landfills, construction and demolition landfills and solid waste collection and recycling centers.
Sec. 62-36. Accumulation.
Sec. 62-37. Violations and penalties.
Sec. 62-38. Enforcement.
Sec. 62-39. Civil remedies and abatement of nuisance.
Sec. 62-40. Evidence of violations.
Sec. 62-41. Yard trimmings.
Sec. 62-42. Recycling.

***Cross references—**Buildings, construction and related activities, ch. 18; environment, ch. 34; waste disposal systems, § 42-97; health and sanitation, ch. 46; water and sewers, ch. 74.

State law references—Georgia Comprehensive Solid Waste Management Act, O.C.G.A. § 12-8-20 et seq.; local, multijurisdictional and regional solid waste plans, O.C.G.A. § 12-8-31.1; unlawful placement of signs within right-of-way of public road, O.C.G.A. § 32-6-51; authorization to provide garbage and solid waste collection and disposal, Ga. Const. art. IX, § II, ¶ III(a)(2).

ARTICLE I. IN GENERAL

Sec. 62-1. Solid waste management plan.

Nothing in this Code or in the ordinance adopting this Code shall affect any ordinance or resolution adopting or implementing the City of Gray/Jones County Joint Solid Waste Management Plan passed and adopted on March 2, 1999. The same is hereby recognized as continuing in full force and effect to the same extent as if set out in this Code.

Secs. 62-2—62-30. Reserved.

ARTICLE II. SOLID WASTE AND SCRAP TIRE MANAGEMENT

Sec. 62-31. Definitions.

The following words, terms and phrases, when used in this article, shall have the meanings ascribed to them in this section, except where the context clearly indicates a different meaning:

Commercial solid waste means all types of solid waste generated by stores, offices, restaurants, warehouses and other nonmanufacturing activities as defined in O.C.G.A. § 12-8-22(4.1).

County means, in a geographical sense, all the area of Jones County, Georgia including the area of the City of Gray.

Dump means to throw, discard, place, deposit, discharge, bury, burn, or dispose of a substance.

Disposal facility means any facility or location where the final deposition of solid waste occurs and includes but is not limited to landfilling and solid waste thermal treatment technology facilities as defined in O.C.G.A. § 12-8-22(8).

Industrial solid waste means waste generated by manufacturing or industrial processes or operations. Such waste includes, but is not limited to, fertilizer, agricultural chemicals, food and food-related products and other byproducts as defined in O.C.G.A. § 12-8-22(12.1).

Inert waste means wastes that will not or are not likely to cause production of leachate of environmental concern. Such wastes are limited to earth and earth-like product's, concrete, cured asphalt, rock, bricks, yard trimmings, stumps, limbs, and leaves. This definition excludes industrial and demolition waste not specifically listed in this definition (section 391-3-4-.06 of the Georgia Rules for Solid Waste Management).

Junked motor vehicle means any contrivance, or parts thereof, propelled by power and used for transportation of persons or property on public streets and highways, the condition of which is two or more of the following:

(1) Discarded.

(2) Abandoned.

(3) Wrecked.

(4) Dismantled.

(5) Partially dismantled.

(6) Inoperative for more than 12 successive months.

(7) Not registered for licensing for use on public roads.

Litter means discarded materials of every kind as defined in O.C.G.A. § 16-7-42(1).

Municipal solid waste means any solid waste derived from households, including garbage, trash, and sanitary waste in septic tanks and means solid waste from single-family and multifamily residences, hotels and motels, bunkhouses, campgrounds, picnic grounds, and day use recreation areas. The term includes commercial solid waste, but does not include solid waste from mining, agricultural, or industrial processes or operations as defined in O.C.G.A. § 12-8-22(18).

Open dump and *dump site* mean a disposal site, location or facility at which solid waste from one or more sources is left to decompose, burn or to otherwise create a threat to human health or the environment as defined in section 391-3-4-.01(44) of the Georgia Rules for Solid Waste Management.

Public or private property means the right-of-way of any road or highway, any body of water or watercourse or the shores or beaches thereof; any park, playground, building, refuge, or conservation or recreation area; and residential or farm properties, timberlands, or forests, as defined in O.C.G.A. § 16-7-42(2).

Recovered materials means those materials which have known use, reuse, or recycling potential and have been diverted or removed from the solid waste stream for sale, use, reuse or recycling as defined in O.C.G.A. § 12-8-22(25).

Recovered materials processing facility means a facility engaged solely in the storage, processing, and resale or reuse of recovered materials as defined in O.C.G.A. § 12-8-22(26).

Road and *street* shall be mutually inclusive and shall likewise be deemed to include any alley, lane, court, and other thoroughfare, however described or designated.

Scrap tire means a tire that is no longer suitable for its original intended purpose because of wear, damage, or defect, or one that cannot be retreaded or otherwise recycled as defined in O.C.G.A. § 12-8-22(31).

Scrap tire carrier means any person engaged in picking up or transporting scrap tires not otherwise exempted under section 391-3-4-.19(5.g) of the Georgia Rules for Solid Waste Management for the purpose of removal to a scrap tire processor, end user, or disposal facility as defined in O.C.G.A. § 12-8-22(32).

Scrap tire generator means any person who generates scrap tires as defined in section 391-3-4-.19(2.i) of the Georgia Rules for Solid Waste Management.

Solid waste means any garbage or refuse; sludge from a wastewater treatment plant, water supply treatment plant, or air pollution contract facility; and other discarded material including solid, liquid, semisolid, or contained gaseous material resulting from industrial, commercial, mining, and agricultural operations and from community activities, but does not include recovered materials; solid or dissolved materials in domestic sewage; solid or dissolved materials in irrigation return flows or industrial discharges that are point sources subject to permit under 33 USC section 1342, or source, special nuclear, or byproduct materials as defined by the Federal Atomic Energy Act of 1954, as amended (68 Stat. 923) in O.C.G.A. § 12-8-22(33).

Solid waste handling means the storage, collection, transportation, treatment, utilization, processing or disposal of solid waste, or any combination of such activities. O.C.G.A. § 12-8-22(34).

Tire retailer means any person engaged in the business of selling new, retreaded or used replacement tires O.C.G.A. § 12-8-22(39).

Waste means all discarded substances and materials whatsoever exceeding ten pounds in weight or 15 cubic feet in volume, or any such substance in any weight or volume if biomedical waste, hazardous waste (as that term is defined in O.C.G.A. § 12-8-62), or any such substance or material dumped for commercial purposes. Vith the exception of nonhazardous, low-impact animal byproducts classified by DNR, the term "waste" includes without limitation, bottles, boxes, containers, papers, tobacco products, tires, dead animals including their bedding and other wastes from such animals, appliances, mechanical equipment or parts, building or construction materials, tools, machinery, wood, motor vehicles and motor vehicle parts, vessels, aircraft equipment, boats, manufactured homes, waste oil, batteries, antifreeze, sludge from a wastewater treatment facility, water supply treatment plant, or air pollution control facility, air contaminants from any source or facility, and any other discarded material or substance of every kind and description resulting from domestic, industrial, commercial, mining, or governmental operations, including household, commercial, construction and demolition waste, or industrial solid waste which is not hazardous, nonmedical, and in a form classified as solid waste by the state department of natural resources in O.C.G.A. § 16-7-51. (Ord. of 3-6-2001, § I)

Cross reference—Definitions generally, § 1-4.

Sec. 62-32. Waste disposal; general.

(a) It shall be unlawful for any person to have on private property litter, scrap tires, solid wastes, industrial, inert, or municipal solid waste, or wastes as defined in section 62-1 of this article.

(b) The owner or occupant of any premises shall be responsible for the sanitary handling and disposing of all litter, scrap tires, and municipal, commercial or industrial solid waste on the premises owned, used or occupied by such person. This includes vacant lots, borders, parking lots, embankments, fences, walls and drainage areas.

(c) It shall be unlawful to dump, open dump, or permit the dumping of litter, scrap tires, municipal, commercial, or industrial solid waste or recyclables at any place in the county including, and without limitations, any public or private property in the county or any waters in the county unless such litter or waste originates in the county or other areas authorized by the board of commissioners and:

(1) The property is designated by the board of commissioners or the duly designated agent for the disposal of litter, municipal, commercial or industrial solid waste, scrap tires or recovered materials and the person is authorized to use such property;

(2) The litter, municipal, commercial or industrial solid waste, recyclables or scrap tires is placed into a receptacle or container installed specifically for such property; and

(3) The property has a valid solid waste-handling permit issued by environmental protection division.

(d) It shall be unlawful for any person to dump or place waste unless authorized to do so by law or by a duly issued permit:

(1) In or on any public highway, road, street, alley, or thoroughfare, including any portion of the right-of-way thereof, or on any other public lands except in containers or areas lawfully provided for such dumping;

(2) In or on any freshwater lake, river, canal, stream, or creek;

(3) In or on any public or private property unless such dumping will not adversely affect the public health and is not in violation of any other local, state or federal law, rule or regulation; or

(4) The roll off containers and recycling convenience centers in the county are for county residents only. The deposit of garbage or refuse that originates outside the county will be considered littering.

(e) All persons defined as scrap tire generators, scrap tire carriers, tire retailers shall be subject to rules as defined in section 391-3-4-.19 of the Georgia Rules for Solid Waste Management and handle scrap tires in accordance with the provisions of O.C.G.A. § 12-8-20, et seq. and the Georgia Rules for Solid Waste Management, chapter 391-33-4, 392-3-4.19 applicable to solid waste and tires.

(f) It shall be unlawful for any person to abandon any motor vehicle on public rights-of-way or public property without expressed permission from the board of commissioners or on private property without expressed permission from the owner of such property. A vehicle shall be considered abandoned if it remains in one place for a period exceeding 72 hours.

(g) All persons owning property or occupying premises of such property within areas of the county not zoned or permitted for accumulation, storage, repair, or sales of junked motorized vehicles must keep such vehicle obscured from public view. No more than three junked motorized vehicles will be permitted per property parcel as designated by the most recent county tax maps on file in the tax assessor's office.
(Ord. of 3-6-2001, § II)

Sec. 62-33. Transporting solid waste and litter.

(a) It shall be unlawful to drive or operate a vehicle in the county hauling municipal, commercial, or industrial solid waste that leaks, flows freely or spills from such vehicle.

(b) No person shall drive or move any truck or other vehicle within the county unless such truck or other vehicle is so constructed or loaded or covered so as to prevent any load, contents or litter from being blown, scattered or in any manner deposited in or upon any street, sidewalk, or other public place or upon private property within the county. Any litter or municipal, commercial, or industrial solid waste hauled on a moving vehicle shall be covered in such a manner that litter will not blow or escape from such vehicle while moving or parked on public or private property in the county.

(c) It shall be unlawful for any vehicle to transport litter or waste on any public streets, or roadways, in the county without suitable coverings or other restraint devices securely fastening such litter or waste to the vehicle so as to prevent any materials from being deposited onto other motor vehicles, pedestrians, or the roadway and its adjoining areas. However, this section shall not prohibit the necessary and permitted spreading of any substance in public road maintenance or public road construction operations.

(d) It shall be unlawful for a business or private person, engaged in waste hauling or transportation for hire, to transport from businesses or private residences to a county recycling convenience center, solid waste collection point, or lawfully permitted dump site to dispose of materials as solid waste that have been intentionally sorted as recyclables by the business or private residence customers, rather than placing the materials in the location designated by the county or appropriate authority for such recyclables.

(e) It shall be unlawful for a private business, legally permitted for collection of commercial, industrial, inert, and solid waste, or scrap tires, to dispose of collected waste at county recycling convenience centers or county solid waste collection points.

(f) It shall be unlawful for any person to drive or move any truck or other vehicle within the county, the wheels or tires of which carry onto or deposit in or upon any street, sidewalk, or other public place or upon private property within the county, mud, dirt, sticky substance, litter or foreign matter of any kind.
(Ord. of 3-6-2001, § III)

Cross reference—Traffic and vehicles, ch. 70.

Sec. 62-34. Regulation of all solid waste or litter containers and receptacles.

(a) All solid waste or litter containers or receptacles shall be maintained in as sanitary a manner as is reasonably possible consistent with its use for solid waste and litter disposal.

(b) Persons using solid waste and litter containers or receptacles shall not keep these containers or receptacles on the roads or streets other than when loading and unloading is scheduled.

(c) Persons using solid waste and litter containers or receptacles shall deposit only authorized solid waste and refuse in the container or receptacle.

(d) No person shall deposit a scrap tire in any container or receptacle unless authorized by the owner of the receptacle or the board of commissioners or his designee. Scrap tires must be disposed of properly.

(e) No person shall deposit any burning or smoldering material in such container or receptacle.

(f) No person shall set fire to the contents of any such container or receptacle.

(g) No person shall deposit large noncompatible articles in containers or receptacles such as, but not limited to, stoves, refrigerators, bed springs, automobile parts, boat parts, large tree limbs or air conditioning units, except containers or receptacles designated for that purpose only.

(h) No person shall deposit any flammable or explosive materials in any such container or receptacle.

(i) No live or dead animals, livestock or poultry shall be deposited in any such container or receptacle, except receptacles designed for such purpose and so designated by the board of commissioners.

(j) No person shall willfully damage or alter the location of any such container or receptacle without the written consent of the board of commissioners.

(k) No salvage or scavenging operations shall be conducted in or around such containers or receptacles except by written consent of the board of commissioners.

(l) No person shall deposit any solid waste at a county solid waste collection and recycling center unless such solid waste is contained in such a manner that it can be handled by the attendant. Solid waste shall be deposited only during the official hours of operation, unless express written permission is given by the board of commissioners or their designee.

(m) No person shall deposit solid waste, water or litter of any kind at any county solid waste collection and recycling center into county owned receptacles or containers designated for the collection of recovered materials. Only authorized materials such as glass, aluminum, newspaper, magazines, mixed paper, cardboard, plastic, and tin or other accepted material may be deposited in the appropriate container designated for such material.

(n) Handbills, political or advertisement matter, and yard sale signs must be taken down after the conclusion of the event. All handbills, political or advertisement matter, and yard sale signs must be on their own support and not secured to utility poles, stop signs, or any other existing state, county, or private signs of any description.

(o) Phone books or catalogues thrown out by a publisher's representative will be considered litter if not cleaned up within seven days after delivery.

(p) Any person desiring to place any political signs or advertisement matter on public property within the county shall first post a $100.00 cash bond with the clerk of the county along with obtaining permission from the board of commissioners to distribute such materials. The cash bond may be returned upon complete cleanup of political signs or advertisement matter on public property and presentation of a written request from the payee of the cash bond.
(Ord. of 3-6-2001, § IV)

Sec. 62-35. Regulation of municipal solid waste landfills, inert landfills, construction and demolition landfills and solid waste collection and recycling centers.

(a) No landfill shall be operated in the county other than a landfill designated by the board of commissioners as the county landfill, and no private municipal solid waste landfill shall be operated in Jones County, Georgia without a solid waste handling permit issued by the Georgia Environmental Protection Division, including inert construction and demolition landfills having been properly permitted as such by the state department of natural resources, environmental protection division.

(b) It shall be unlawful for any person to deposit solid waste of any kind outside the gate of a solid waste collection and recycling center. All solid waste must be put into the proper container, not on the ground outside the container.

(c) No scavenging operation of any kind shall be allowed at a solid waste collection and recycling center, without express written permission from the board of commissioners.

(d) No person shall move, remove, or cross any fence, gate, barrier, or sign at a solid waste and recycling center.

(e) Hours of operation of such centers will be set to maximize convenience to residents of the county.

(f) All recovered materials (recyclables) brought to collection centers will be recycled and put in the place provided. It is to be separated and uncontaminated. The attendant on duty at the recycling convenience centers will have the authority to refuse service to anyone who does not separate recyclables and place them into proper container.

(g) The attendant on duty will have full authority of such center consistent with this article.

(h) All rules listed above shall apply to all public and/or private property in the county, all waters and/or waterways of the county, all county solid waste collection points and recycling convenience centers.
(Ord. of 3-6-2001, § V)

Sec. 62-36. Accumulation.

(a) No owner or occupant of any such property shall bury or burn litter or waste without prior authorization and written permission from the board of commissioners or an applicable regulatory agency, including but not limited to, the environmental protection agency, environ-

mental protection division and/or the state forestry service. Nothing in this section shall authorize or be construed to permit the burial or burning of any material which is otherwise prohibited by state or federal law.

(b) No owner or occupant of any property shall allow the accumulation, on his premises, of garbage, litter or waste where such material creates or causes a health hazard to neighbors or other citizens, or which is unsightly or emits foul or obnoxious odors.

(c) It shall be unlawful for any person to set fire to the contents of, indiscriminately scatter or disperse the contents of, or otherwise vandalize any containers used for the storage or dumping of litter or waste.

(d) The conduct described in subsections (a)—(c) of this section shall constitute a separate violation of this article for each day the garbage or waste material remains or continues to unlawfully pollute, contaminate or burn on such premises.

(e) All construction sites, churches, retail stores, restaurants, apartments and commercial businesses will furnish their own solid waste disposal container. Areas around these containers will be kept clean and sanitary. Solid waste must be placed into the containers and not on the ground around the containers.

(f) Solid wastes from commercial or home construction sites will not be accepted at the county recycling convenience centers.
(Ord. of 3-6-2001, § VI)

Sec. 62-37. Violations and penalties.

(a) Any person violating any portion of this article shall be guilty of a misdemeanor and, upon conviction thereof, in the magistrate court of the county, shall be punished as provided in section 1-19.

(b) In the sound discretion of the judge of the court with jurisdiction, the offender may also be directed to pick up and remove litter from any public streets or highways and/or other public rights-of-way or private areas for a distance not to exceed one mile, any litter the person has deposited and any and all litter deposited thereon by anyone else prior to the date of execution or sentence as provided in O.C.G.A. § 16-7-43(b).

(c) In the sound discretion of the judge of the court with jurisdiction, the person may be directed to pick up and remove litter from any public park, private right-of-way, or with the prior permission of the legal owner or tenant in lawful possession of such property, any private property upon which it can be established by competent evidence that the person has deposited litter thereon, and all litter deposited thereon by anyone prior to the date of execution of sentence.

(d) The court may order the publication of the names and photographs of persons convicted of violating this article.

(e) The court may order the violator to repair or restore property damaged, or pay damages resulting from such violations, or perform public service related to the repair or restoration of property damaged by the violation.

(f) In the case of an improper waste disposal site, the property owner, contractor, developer, builder or other person responsible for the property shall cause the property to be cleaned and to come into full compliance with this article within a 30-day period after written notification by persons authorized by this article to deliver such notification. The county shall not be responsible for any costs of cleanup or remediation.

(g) The expenses incurred by the county for cleanup, enforcement of violations and penalties shall be chargeable to the violator, including, but not limited to, court costs, filing fees, special investigations, mutual aid assistance from other agencies and other costs necessary for the reasonable enforcement of this article.

(h) In the case of junked motor vehicles, any junked motor vehicle that is determined to be in violation of this article shall be processed as follows:

(1) The environmental education and code enforcement officer will issue a notice for the violation.

(2) The notice will be in writing.

(3) The notice will specify the section of this article violated and the location of the junked motor vehicle.

(4) The notice will request the violation be abated within 30 days from the date of the notice.

(5) The notice will be delivered by certified mail or hand delivered to the owner of the junked motor vehicle. If a diligent search has been made and the owner cannot be determined, the notice may be served by attaching it to the junked motor vehicle in a conspicuous place. This shall constitute service of the notice of violation to the owner of the junked motor vehicle.

(i) In addition to actions filed by the county for violations of this article, any state or federal agency may independently file separate or concurrent charges within their respective applicable authority and seek conviction within a court of competent jurisdiction.

(j) Twenty percent of all fines collected for violations of this article shall be dispersed on a quarterly basis to the Keep Jones Beautiful Commission for funding of various projects to promote beauty of public landscapes or public buildings in the county, and education of citizens on solid waste control and recycling.
(Ord. of 3-6-2001, § VII)

Sec. 62-38. Enforcement.

(a) Enforcement of this article shall be the responsibility of the board of commissioners, the environmental education and enforcement officer or his designee, and/or the county sheriff's office.

(b) Any person authorized to enforce this article shall be empowered to enter any property, upon reasonable cause, at reasonable or necessary times in order to properly inspect for violations of this article, subject to the condition that to allow entry onto private property for inspection, the alleged violation of this article must be visible from a public road or right-of-way, or upon the officer having received a valid complaint alleging a violation of this article, or by a judge's order upon such officer having received information/allegations that constitute reasonable suspicion that a serious unlawful act or threat to the health and safety of the community and/or the environment has occurred or is about to occur.

(c) Appeals for violations of this article may be made to the magistrate court of the county, or higher court if the offender so chooses. The offender always has the right to consult his attorney at any time before the hearing is scheduled for court.
(Ord. of 3-6-2001, § VIII)

Sec. 62-39. Civil remedies and abatement of nuisance.

(a) If any person violates any provision of this article, the county or other appropriate authority may, in addition to other remedies, institute an action for injunction, clean-up or stop work orders, mandamus, irreversible damage fines, lien on property or other appropriate action or proceeding to prevent such unlawful acts or to correct or abate any such violation of O.C.G.A. §§ 16-7-52, 16-7-53. In addition, the county may immediately revoke or suspend any and all business, building, development or any and all other county issued permits related to the property involved with the violation until such time that compliance is met, or until the ruling of a court of competent jurisdiction is obtained, at which time respective permits may be reissued.

(b) Upon finding evidence, a written notice of violation may be issued at the discretion of the enforcing officer in lieu of a citation. In the absence of corrective action or if a second violation occurs, the evidence constituting the notice of violation may be submitted as evidence for consideration as a first offense before a court with competent jurisdiction and the pending case treated as a second offense by the court.

(c) If a person is found guilty of a violation of the provisions of this article, the court and/or the board of commissioners may cause written notice to be given, or incorporate into the court order to the violator instructing that person to properly address any provision still remaining in violation of this article for which such violator is convicted. Such notice shall be by personal service and if the violator cannot be so served, then by registered mail sent to the violator's last known address.

(d) Upon failure, neglect or refusal of any person so notified to properly address the provisions within 30 days after receipt of notice as provided in this section, the board of commissioners is hereby authorized and empowered to cause the cleanup, removal or disposal of, including but not limited to, any litter, or any type of waste as defined in this article, dumped, deposited, thrown, or left on public or private property in violation of this article on

behalf of the county. The expenses incurred by the county shall be chargeable to the violator and a statement of the amount due for such expenses shall be sent by the board of commissioners and/or the court by registered mail.

(e) When the full amount of such charges are not paid by the violator within 30 days after receipt of the statement as provided for in this section, the board of commissioners shall cause to be recorded in the execution docket a sworn statement showing the cost and expense incurred by the county, the dates of county action, the location of the property for which action was taken, and the name of the person to be charged for the expenses incurred. The recordation of such statement shall constitute a lien on the personal and real property of the person to be charged and shall remain in full force and effect until final payment is received in full, including accrued interest from the date of recording and any and all costs. Such amount as shall constitute final payment shall be subject to collection in the manner fixed by law for the collection of taxes.

(f) If waste or hazardous materials in a dump site cannot be removed from public or private property without causing further endangerment to the environment and/or public health, whether legal or illegal, caused with intent or by accident, acts of God or force of nature, or where a permit for such longterm or permanent disposal has been issued by the proper authority as defined in section 62-35, the county may attach or otherwise affix an permanent addendum to the deed of real property wherein the dump site exists, stating the approximate size and location of the dump on the property and an approximate description of the materials contained therein, as well as the approximate dates such dumping occurred, to be recorded on the property plat as a fill area as provided in O.C.G.A. § 12-8-30. The purpose of the attachment is to preserve the health and safety of current and future landowners and users of such properties, to promote the integrity of property description and values, and to record the location of such dump sites. The county's exercise of this subsection shall in no way be mandatory, and the county or its agents shall not be held liable for exercise of action or inaction for implementation of this subsection, nor for the costs of such action or inaction. (Section 391-3-4-.06 of the Georgia Rules for Solid Waste Management)

(g) This section shall apply with full force and effect regardless of the provisions of any order of the court in which the violator was convicted. This section should not be construed as an excuse for failure on the part of the violator to perform any cleanup ordered by the court, nor shall it be considered as a mitigating factor in any contempt action against a violator who has failed to obey the order of the court.
(Ord. of 3-6-2001, § IX)

Sec. 62-40. Evidence of violations.

(a) Whenever litter, or any type of waste as defined in this article, is thrown, deposited, dropped, or dumped by any person or, from any motor vehicle, boat, airplane, or other conveyance in violation of this article, it shall be prima facie evidence that such person or the operator of the conveyance has violated this article.

(b) Whenever any litter, or any type of waste as defined in this article, which is dumped, deposited, thrown, or left on public or private property in violation of the article is discovered to contain any articles, including, but not limited to letters, bills, publications, or other writings which display the name of a person thereon in such a manner as to indicate that the article belongs or belonged to such person, it shall be a rebuttable presumption that such person has violated this article.
(Ord. of 3-6-2001, § X)

Sec. 62-41. Yard trimmings.

(a) Yard trimmings shall not be placed in or mixed with solid waste. Yard trimmings shall not be disposed of in a solid waste disposal container unless provided specifically for that purpose. Yard trimmings shall be sorted and stockpiled or chipped, composted, used as mulch or otherwise beneficially reused or recycled to the maximum extent feasible. Any yard trimmings to be collected by any entity other than the property owner shall be sorted and stored in such a manner as to facilitate collection, composting, or other handling. Yard trimmings will be accepted at the overland way recycling convenience center only.

(b) Property owners are required to keep weeds and grasses below 18 inches in height. Heavily wooded lots where equipment cannot maneuver on the lot because of density are exempt from this requirement.
(Ord. of 3-6-2001, § XI)

Sec. 62-42. Recycling.

The board of commissioners hereby finds that it is in the best interest of the citizens of the county, in order to promote the health, safety, and welfare of the citizens of the county, to recycle as many waste materials as possible in order to reduce the accumulation of litter and garbage and solid waste materials which must be properly disposed of; therefore, it is the policy of the board of commissioners to encourage recycling whenever practicable.
(Ord. of 3-6-2001, § XII)

Chapters 63—65

RESERVED

Chapter 66

TAXATION*

Article I. In General

Sec. 66-1. Tax lien forclosure.
Secs. 66-2—66-30. Reserved.

Article II. Board of Tax Assessors

Sec. 66-31. Composition, appointment.
Sec. 66-32. Qualifications.
Sec. 66-33. Terms.
Sec. 66-34. Vacancies.
Sec. 66-35. Compliance with laws, regulations.
Secs. 66-36—66-60. Reserved.

Article III. Financial Institutions

Sec. 66-61. Definitions.
Sec. 66-62. Tax levied.
Sec. 66-63. Minimum tax.
Sec. 66-64. Returns.
Sec. 66-65. When taxes due and payable.
Secs. 66-66—66-90. Reserved.

Article IV. Insurers

Sec. 66-91. Definitions.
Sec. 66-92. Gross premiums tax.

***Cross references—**Any resolution or ordinance providing for local improvements and assessing taxes for such improvements saved from repeal, § 1-14(9); any resolution or ordinance levying or imposing taxes not included in this Code saved from repeal, § 1-14(14); administration, ch. 2; businesses and business regulations, ch. 22.

State law references—Local government budgets and audits, O.C.G.A. § 36-81-1 et seq.; accounting for public funds, O.C.G.A. § 45-8-1 et seq.

ARTICLE I. IN GENERAL

Sec. 66-1. Tax lien forclosure.

(a) *Authority of tax commissioner.* The Jones County tax commissioner is hereby authorized and directed to conduct judicial in rem tax foreclosures as to such properties with tax delinquencies as the tax commissioner shall determine appropriate. The tax commissioner shall use this alternate method of foreclosure when the tax commissioner determines that it would be a more efficient and effective method of foreclosure and would be in the best interest of Jones County.

(b) *Method.* Judicial in rem tax foreclosures shall be in accord with said article V and the provisions of O.C.G.A. § 48-4-75 et seq., as presently set out and as they may hereafter be amended. All provisions of said article are incorporated herein and made a part hereof by reference.
(Res. No. 2011-03R, §§ I, II, 2-15-2011)

Secs. 66-2—66-30. Reserved.

ARTICLE II. BOARD OF TAX ASSESSORS*

Sec. 66-31. Composition, appointment.

The county board of tax assessors shall have five members, all of whom shall be appointed by the board of commissioners.
(Res. of 8-15-2000)

Sec. 66-32. Qualifications.

Members of the board of tax assessors shall possess qualifications as required by state law.
(Res. of 8-15-2000)

Sec. 66-33. Terms.

Each member of the board of tax assessors shall serve a term of six years. The terms shall be staggered to ensure that the majority of the board of tax assessors does not expire in the same calendar year.
(Res. of 8-15-2000)

Sec. 66-34. Vacancies.

Vacancies occurring in the membership of the board of tax assessors shall be filled by the board of commissioners for the remainder of the unexpired term of office.
(Res. of 8-15-2000)

***Cross reference—**Administration, ch. 2.

Sec. 66-35. Compliance with laws, regulations.

The laws, rules, and regulations of the state shall be adhered to by the board of tax assessors.
(Res. of 8-15-2000)

Secs. 66-36—66-60. Reserved.

ARTICLE III. FINANCIAL INSTITUTIONS*

Sec. 66-61. Definitions.

The following words, terms and phrases, when used in this article, shall have the meaning ascribed to them in this section, except where the context clearly indicates a different meaning:

Gross receipts has the same meaning as is ascribed to the term "gross receipts" for each such depository financial institution in O.C.G.A. § 48-6-93.
(Res. of 12-20-1983, § 1)
Cross reference—Definitions generally, § 1-4.

Sec. 66-62. Tax levied.

(a) Pursuant to the authority contained in O.C.G.A. § 48-6-93 there is levied for each year, upon depository financial institutions located in the county, not exempted by state law, an annual business license tax at the rate of 0.25 percent of the gross receipts of each such institution.

(b) The taxes levied by subsection (a) of this section for each year shall be levied on the amount of gross receipts received by each such depository financial institution during the immediately preceding calendar year.
(Res. of 12-5-1986, § 1)

Sec. 66-63. Minimum tax.

The minimum annual tax due under this article shall be $1,000.00 per annum.
(Res. of 12-20-1983, § 2)

Sec. 66-64. Returns.

Each depository financial institution subject to the tax levied by this article shall file with the county not later than March 1 of each year a return of its gross receipts received by it during the immediately preceding calendar year. The returns shall be made in the manner and

*__State law reference—__Local depository financial institutions business license tax, O.C.G.A. § 48-6-93.

in the form prescribed by the commissioner of the department of banking and shall be based on the allocation method set forth in O.C.G.A. § 48-6-93(d). The tax levied pursuant to this article shall be assessed and collected based upon the information provided in the return.
(Res. of 12-20-1983, § 3)

Sec. 66-65. When taxes due and payable.

The laxes levied by this article shall be due and payable no later than 30 days after filing the return required by this article unless extended by the board of commissioners.

Secs. 66-66—66-90. Reserved.

ARTICLE IV. INSURERS*

Sec. 66-91. Definitions.

The following words, terms and phrases when used in this article, shall have the meanings ascribed to them in this section, except where the context clearly indicates a different meaning.

Gross direct premiums means gross direct premiums as used in O.C.G.A. § 33-8-8.2(a).
(Res. of 8-16-1983, § 1)

Cross reference—Definitions generally, § 1-4.

Sec. 66-92. Gross premiums tax.

In accordance with O.C.G.A. § 33-8-8.2, there is herby levied an annual tax upon each insurer doing insurance business within the unincorporated area of the county, in an amount equal to 2.5 percent of the gross direct premiums received during the calendar year on all insurance, other than life insurance, as defined in O.C.G.A. § 33-3-5(2)—(5).
(Res. of 8-16-1983, § 1)

***State law references—**Local tax on other than life insurance companies, O.C.G.A. § 33-8-8.2; general assembly authorized to provide for taxation of insurance companies based on gross direct premiums received from insurance policies within the unincorporated areas of counties, Ga. Const. art. IX, § IV, ¶ I(c).

Chapters 67—69

RESERVED

Chapter 70

TRAFFIC AND VEHICLES*

Article I. In General

Sec. 70-1. Adoption of uniform rules of the road.
Sec. 70-2. Parental responsibility.
Sec. 70-3. Temporary traffic regulations.
Secs. 70-4—70-30. Reserved.

Article II. Operation of Vehicles

Sec. 70-31. General speed limit.
Sec. 70-32. Maximum speed limits on specific streets.
Sec. 70-33. Traffic, speed, etc., zones; signs and traffic control devices.
Sec. 70-34. Speed detection devices.
Sec. 70-35. Covering of loads.
Sec. 70-36. Parking in deceleration or acceleration lanes prohibited.
Sec. 70-37. Off-road vehicles.

***Cross references—**Defect in vehicle or load, § 34-40; transportation of metal rails, pillars or columns, § 34-46; vehicle repair in residential areas, § 34-50; offenses and miscellaneous provisions, ch. 54; transporting solid waste and litter, § 62-33; off-street automobile parking, app. A, § 62; off-street loading and unloading spaces, app. A, § 63; control of curb cuts and vision clearance, app. A, § 64.

State law references—Authority of county to regulate traffic in unincorporated areas, O.C.G.A. § 36-1-20; power of local authorities generally, O.C.G.A. § 40-6-371.

ARTICLE I. IN GENERAL

Sec. 70-1. Adoption of uniform rules of the road.

Pursuant to O.C.G.A. § 40-6-370, O.C.G.A. §§ 40-6-1—40-6-395, known as the uniform rules of the road, are hereby adopted as and for the traffic regulations of the county with like effect as if recited in this chapter.
(Res. of 7-2-1991)

State law reference—Adoption of uniform rules of the road by local authorities, O.C.G.A. § 40-6-372.

Sec. 70-2. Parental responsibility.

It shall be unlawful for the parent, guardian or other adult person having the care and custody of a minor under the age of 16 years to permit, whether knowingly or through ineffective control or supervision, such minor to violate any provision of this Code or state law regarding the operation of vehicles.

Sec. 70-3. Temporary traffic regulations.

In cases where traffic upon the roads of the county may become congested upon occasions of parades, at theaters and other public assemblages where large numbers of vehicles are assembled, the sheriff may make temporary rules directing and regulating the traffic in these congested districts, and any person, who, after being warned of the temporary traffic regulations, shall violate them, shall be liable therefor as for other violations of this Code.

Secs. 70-4—70-30. Reserved.

ARTICLE II. OPERATION OF VEHICLES

Sec. 70-31. General speed limit.

It shall be unlawful for any person to operate a motor vehicle on any street or portion of a street in the county at a rate of speed greater than 30 miles per hour unless another speed limit is posted or otherwise designated for such street or portion of a street.

Sec. 70-32. Maximum speed limits on specific streets.

The board of commissioners may alter the maximum speed limits established by section 70-31 on any street or portion thereof within the county in accord with the provisions of state law. Whenever signs are posted giving notice of the maximum legal speed limit so established for a particular street or portion thereof, it shall be unlawful for any person to drive or operate any vehicle at a rate of speed in excess of such limit.

Sec. 70-33. Traffic, speed, etc., zones; signs and traffic control devices.

(a) Upon approval of the board of commissioners, the sheriff is authorized to designate and maintain by appropriate traffic control signs, markings and devices:

(1) Crosswalks at intersections where there is particular danger to pedestrians crossing the roadway.

(2) Other safety zones for pedestrians.

(3) Traffic lanes.

(4) Speed, parking, truck or other traffic control zones.

(5) Stop, yield, one-way and other directional devices.

(6) Any other sign, marking, device or zone necessary for orderly and safe conditions on the roads and streets of the county.

(b) All traffic control signs, signals, devices and markings shall conform to specifications in the manual on uniform traffic control devices adopted by the state transportation board. All signs and signals required under this chapter for a particular purpose shall so far as practicable be uniform as to type and location throughout the county. All traffic control devices so erected and not inconsistent with the provisions of state law or this Code shall be official traffic control devices of the county.

(c) The county clerk shall keep and maintain an accurate official map setting out all traffic zones, markings, signs and other traffic control devices. The map and any amendments or changes thereto shall be adopted by the board of commissioners and the map shall be known as the official traffic control map of the county. An official copy thereof shall be kept in the office of the county clerk; shall be available to the public; and copies certified by the county clerk shall be admissible in court as proof of the location of any traffic zone, marking, sign or other traffic control device.

(d) No person shall be charged with violating a traffic zone, marking, sign or other traffic control device unless appropriate signs, markings or devices are in fact operating or in existence on the streets involved.

(e) Any violation of any traffic zone, marking, sign or other traffic control device established hereunder shall be a violation of this Code.

Sec. 70-34. Speed detection devices.

(a) The county is hereby authorized to use speed detection devices for the purpose of traffic control on the roads and streets in the county.

(b) Such speed detection devices shall be used only for the purpose of public safety and traffic control, and shall not be used for the purpose of raising revenue.

Sec. 70-35. Covering of loads.

No person shall operate or load any vehicle on the public streets and roads of this county unless the vehicle is constructed, loaded and securely covered so as to prevent any of its load from dropping, escaping or shifting in such a manner as to create a safety hazard or in such a manner as to litter the streets and roads of the county.

Sec. 70-36. Parking in deceleration or acceleration lanes prohibited.

(a) It shall be unlawful for any person to park any automobile, truck, bus, truck tractor, trailer, tractor, trailer combination, motorcycle, moped, or other motor vehicle within or upon the deceleration or acceleration lanes lying in the unincorporated areas of the county.

(b) Deceleration and acceleration lanes shall be defined for the purpose of this section as those strips of pavement lying adjacent to and to the east of the northbound lanes of traffic and adjacent to and to the west of the southbound lanes of traffic which are not part of the regular roadway but afford access into and out of the driveways and side roads along the highway.

(c) Violation of the provisions of this section shall be a violation of a county ordinance and shall be prosecuted in the municipal court. A violation of this section shall be punished as provided in section 1-19.

Sec. 70-37. Off-road vehicles.

(a) As used in this section, the following definitions shall apply:

Access means to a place where ORVs can be lawfully operated.

Operate means to ride in or on, and be actual control of the operation of an ORV.

ORV or off-road vehicle means a motor driven off-road recreational vehicle capable of cross-country travel with out benefit of a road or trail, on or immediately over land, snow, ice, marsh, swampland, or other natural terrain. It includes, but is not limited to, a multi-track or multi-wheel drive or low pressure tire vehicle, and amphibious machine, a ground effect air cushion vehicle, or other means of transportation driven by power from a source other than muscle or wind. "ORV" or vehicle does not include a snowmobile, a farm vehicle being used for farming, a vehicle used for military, fire, emergency, or law enforcement purposes, a construction or logging vehicle used in performance of its common function. This includes, but is not limited to, ORVs commonly known as three-wheelers and four-wheelers.

Public highway or public roadway means that portion of a county road that is improved, maintained and used by the public for vehicular travel, including any improved shoulders.

(b) Any person operating an "ORV" vehicle under any of the following conditions shall be deemed to be in violation of this section and shall be punishable as provided by subsection (c);

(1) Without operative brakes or without mufflers or other silencing equipment.

(2) On any public property, including, but not limited to, any road or right-of-way under the possession or control of the county, except property designated by the board of commissioners for use by "ORV" vehicles;

(3) On any private property without the express written permission of the owner of the property or his agent, proof of which shall be in the immediate possession of the operator of a off-road vehicle at all times when operating such vehicle and which shall be displayed upon demand of any law enforcement officer.

(c) Any person who violates this article is guilty of a misdemeanor, punishable by a fine of no more than $500.00 or imprisonment for 90 days, or both, and full restitution of any damages caused or experienced as a result thereof.
(Ord. No. 200610-2o, §§ 1—3, 10-3-2006)

Chapters 71—73

RESERVED

Chapter 74

WATER AND SEWERS*

Article I. In General

Secs. 74-1—74-30. Reserved.

Article II. Water

Sec. 74-31. Definitions.
Sec. 74-32. Scope; enforcing officer.
Sec. 74-33. Establishment of service.
Sec. 74-34. Establishment of service—Application.
Sec. 74-35. Establishment of service—Changes in ownership, tenancy or service.
Sec. 74-36. Service taps—Application.
Sec. 74-37. Service taps—Authority; meter and backflow installation.
Sec. 74-38. Service taps—Charges for meters and backflow preventers.
Sec. 74-39. Service taps—Fixtures and equipment.
Sec. 74-40. Service taps—Number of meters.
Sec. 74-41. Service—Bypassing meter.
Sec. 74-42. Service—Curb stop or cutoff valve requirements.
Sec. 74-43. Connection—To system without authority.
Sec. 74-44. Connection—Making.
Sec. 74-45. Customer's service line—Installation, maintenance, etc.
Sec. 74-46. Water meters—Obstructing or damaging meters or devices.
Sec. 74-47. Water meters—Reading; monthly bill.
Sec. 74-48. Water meters—Inoperative.
Sec. 74-49. Monthly bill.
Sec. 74-50. Monthly bill—Complaints; adjustments.
Sec. 74-51. Monthly bill—Failure to receive bill.
Sec. 74-52. Monthly bill—Payments.
Sec. 74-53. Monthly bill—Nonpayment of bills.
Sec. 74-54. Monthly bill—Shutoff for nonpayment.
Sec. 74-55. Tampering—With meter.
Sec. 74-56. Tampering—Illegally turning on water after cutoff for nonpayment.
Sec. 74-57. Termination of service—At water system discretion.
Sec. 74-58. Termination of service—By customer request.
Sec. 74-59. Termination of service—Liability for cutoff failures.
Sec. 74-60. Termination of service—Liability of customer.

***Cross references—**Administration, ch. 2; buildings, construction and related activities, ch. 18; businesses and business regulations, ch. 22; environment, ch. 34; floods, ch. 42; sanitary sewage systems, § 42-96; health and sanitation, ch. 46; historic preservation, ch. 50; roads, ch. 58; solid waste, ch. 62; comprehensive land development, app. A.

State law references—Water Resources Center, O.C.G.A. § 12-5-1 et seq.; adoption of ordinances, rules and regulations relating to payment for street improvements and construction of water, gas and sewer connections, payment of costs of connections, O.C.G.A. § 36-39-7; authority to provide stormwater, sewage collection and disposal systems, Ga. Const. art. IX, § II, ¶ III(a)(6).

Sec. 74-61. Water mains and lines—Inspection.
Sec. 74-62. Water and sewer mains service lines—Leaks.
Sec. 74-62.1. Connections to a sewage system.
Sec. 74-63. Water mains and lines—Authority to prohibit waste of water.
Sec. 74-64. Authority to prohibit waste of water—Turning off water for violation.
Sec. 74-65. Water mains and lines—Turning off water for emergency or necessity.
Sec. 74-66. Water mains and lines—Damages.
Sec. 74-67. Fire hydrants—Use and misuse.
Sec. 74-68. Fire hydrants—Charges for use.
Sec. 74-69. Rates—Authority to fix water rates.
Sec. 74-70. Rates—Deposits for water service.
Sec. 74-71. Special consideration—Grease recovery systems.
Sec. 74-72. Discharge of grease trap contents prohibited.
Sec. 74-73. Theft of water services.
Sec. 74-74. Water rate cost adjustments.
Sec. 74-75. Water meters.
Sec. 74-76. Permanent easement restrictions.
Sec. 74-77. Rate schedule.
Secs. 74-78—74-130. Reserved.

Article III. Sewers

Sec. 74-131. Agreement for service.
Sec. 74-132. Authority to read meters.
Sec. 74-133. Eminent domain.
Secs. 74-134—74-149. Reserved.

Article IV. Illicit Discharge and Illegal Connection

Division 1. General Provisions

Sec. 74-150. Purpose and intent.
Sec. 74-151. Applicability.
Sec. 74-152. Compatibility with other regulations.
Sec. 74-153. Severability.
Sec. 74-154. Responsibility for administration.
Secs. 74-155—74-159. Reserved.

Division 2. Definitions

Sec. 74-160. Definitions.

Division 3. Prohibitions

Sec. 74-161. Prohibition of illicit discharges.
Sec. 74-162. Prohibition of illegal connections.
Secs. 74-163—74-169. Reserved.

Division 4. Compliance, Access, Inspection and Notification

Sec. 74-170. Industrial or construction activity discharges.

Sec. 74-171. Access and inspection of properties and facilities.
Sec. 74-172. Notification of accidental discharges and spills.
Secs. 74-173—74-179. Reserved.

Division 5. Violations, Enforcement and Penalties

Sec. 74-180. Violations.
Sec. 74-181. Notice of violation.
Sec. 74-182. Appeal of notice of violation.
Sec. 74-183. Enforcement measures after appeal.
Sec. 74-184. Costs of abatement of the violation.
Sec. 74-185. Civil penalties.
Sec. 74-186. Criminal penalties.
Sec. 74-187. Violations deemed a public nuisance.
Sec. 74-188. Remedies not exclusive.

ARTICLE I. IN GENERAL

Secs. 74-1—74-30. Reserved.

ARTICLE II. WATER*

Sec. 74-31. Definitions.

As used in this article, unless different meaning is apparent from the content:

Approved is used in reference to a water supply that has been approved by the commission or its designee. As herein used in reference to air-gap separation, double check valve assembly or other backflow prevention assemblies or methods, the term "approved" shall mean as allowed or sanctioned by the Southern Plumbing Code.

Backflow means the undesirable reversal of flow of water or mixtures of water and other liquids, gases or other substances into the distribution pipes of the potable supply of water.

Backflow prevention assembly (approved) means an assembly that has been investigated and approved by a state or federal regulatory agency, used to prevent backflow into a potable water system, based on the degree of hazard either existing or potential.

Board of commissioners means the Jones County Board of Commissioners.

Consumer means the owner of private industries or operator of a private water system or residence, receiving service from the Jones County Water System.

Contamination means an impairment of the quality of the water, which creates an actual hazard to the public health through poisoning or through the spread of disease by sewage, industrial fluids or waste.

County means the entity, Jones County.

Customer means the person or persons responsible for an individual account established with the Jones County Water System.

Commission or *commissioners* means the Jones County Board of Commissioners.

Owner means any person who or entity which has legal title to, or license to operate or habitate in, a property.

Public sewer means a sewer which is owned and controlled, or controlled by the county.

Service connection means the point of delivery of water to premises, the normal location of the meter. It is the end of the water system's jurisdiction and the beginning of the consumer's responsibility.

***Editor's note—**Ord. No. 201202-1o, adopted February 21, 2012, amended art. II in its entirety to read as herein set out. Former art. II pertained to the same subject matter, and derived from Ord. No. 2011-05, adopted May 10, 2011.

Shall, will, may. The terms "shall" and "will" are mandatory; "may" is permissive.

Sewer means a pipe or conduit that carries wastewater.

Theft means the act of stealing. To receive water without the consent of, or knowledge from the water department. Including, but not limited to: bypassing water meter, or receiving un-metered water from the Jones County Water System.

Wastewater means the spent water of a community. From the standpoint of the source, it may be a combination of the liquid and water carried wastes from residences, commercial buildings, industrial plants, and institutions, together with any groundwater, surface water, and storm water that may be present. The equivalent term is sewage.

Water system means the Jones County Water System.
(Ord. No. 201202-1o, § 1.01, 2-21-2013; Ord. No. 201306-1o, § 1.01, 7-1-2013)

Sec. 74-32. Scope; enforcing officer.

The rules and regulations contained in this article shall be considered a part of the contract with every builder, developer and consumer of county water. Such builder, developer and consumer of county water shall be governed by and subject to such rules and regulations.
(Ord. No. 201202-1o, § 1.02, 2-21-2013; Ord. No. 201306-1o, § 1.02, 7-1-2013)

Sec. 74-33. Establishment of service.

The system may require proof of identity of each applicant and occupancy information sufficient to establish the identity of the consumer of water and sewer services. In addition, the system may require tenant and/or property ownership information on each property served at the time of application regardless of whether the property owner is the occupant or consumer. No new account shall be established for customers with delinquent charges on any account in the name of such customers or for customers on any partial payment plan agreement until such charges are paid.
(Ord. No. 201202-1o, § 1.03, 2-21-2013; Ord. No. 201306-1o, § 1.03, 7-1-2013)

Sec. 74-34. Establishment of service—Application.

(a) Application for service and payment of any required fees or deposits shall be made at the offices of the Jones County Water System, 270 Highway 49, Macon, GA 31211 by the owner, owner's agent or lessee of the property to be served, upon blank forms furnished therefore. Such application shall state the official house number or numbers of the premises correct mailing address and a copy of the driver's license of the applicant.

(b) If you are renting the property you are required to furnish JCWS a copy of a rental/lease agreement along with the proper identification.

(c) Water system office hours are Monday through Friday, 8:00 a.m. to 5:00 p.m., excluding county observed holidays.

(d) Connection with the mains of the county will be made upon the written application, payment of any required fees by the owner (or his duly authorized agent) and upon compliance by the applicant with the rates, rules and regulations of the county, and after the approval of the application by the county.
(Ord. No. 201202-1o, § 1.04, 2-21-2013; Ord. No. 201306-1o, § 1.04, 7-1-2013)

Sec. 74-35. Establishment of service—Changes in ownership, tenancy or service.

(a) A new application shall be made at the office of the Jones County Water System and approved by the county upon any change in ownership, tenancy or any family member of the property. If the application is made and it is found to contain false information, the service will be disconnected immediately. You [the applicant] could possibly be charged for falsifying documents. The county shall have the right to discontinue the water supply until such new application is made and approved.

(b) Connection with the mains of the county will be made upon the written application, payment of any required fees by the owner (or his duly authorized agent) and upon compliance by the applicant with the rates, rules and regulations of the county, and after the approval of the application by the county.
(Ord. No. 201202-1o, § 1.07, 2-21-2013; Ord. No. 201306-1o, § 1.05, 7-1-2013)

Sec. 74-36. Service taps—Application.

(a) Application for water and/or sewer service connections shall be made at the office of the Jones County Water System by the owner, owner's agent or lessee of the property to be served, upon blank forms furnished therefore. Such application shall state the official house number or numbers of the premises and correct mailing address of the applicant.

(b) Connection with the mains of the county will be made upon the written application, payment of any required fees by the owner (or his duly authorized agent) and upon compliance by the applicant with the rates, rules and regulations of the county, and after the approval of the application by the county. The size of service lines, valves, meters and the county's engineer shall determine other fittings, fixtures or appliances necessary to give the service applied for.
(Ord. No. 201202-1o, § 1.06, 2-21-2013; Ord. No. 201306-1o, § 1.06, 7-1-2013)

Sec. 74-37. Service taps—Authority; meter and backflow installation.

(a) No service taps shall be made unless first authorized by the water system. All such taps shall be made in accordance to county "Standards for Design and Construction Specifications", or as otherwise directed by the water system.

(b) All water meters within the county water system shall be equipped with an appropriate backflow prevention device. All backflow prevention devices shall be of a double valve design and must be present at the time the water meter is installed. No meter will be installed if the

appropriate backflow prevention device is not present and in proper working order. The water system shall have the right to install, or cause to be installed, an approved backflow prevention device on all meters within the county water system.

(c) When a customer's water system, or a branch of the system, has been closed by the installation of a backflow prevention device, an auxiliary relief valve or expansion chamber shall be installed to limit thermal expansion of the water being heated to no more than 80 psi static pressure at any fixture on the system. The installation and cost of the auxiliary relief valve shall be the responsibility of the customer.

(d) No water service connection to any premises shall be installed or maintained by the water system unless the water supply is protected from backflow and thermal expansion as required by the Georgia State Plumbing Code and this section. Service of water to any premises may be discontinued by the water system if a backflow prevention device and auxiliary valve required by this section are not installed, tested and maintained, or if it is found that, a backflow prevention assembly has been removed or bypassed. Service will not be restored until such conditions or defects are connected.

(e) The customer's system shall be open for inspection at all reasonable times to authorized representatives of the water system and the building inspections department to determine whether violations of this section exist. When a condition becomes known, the water system may deny or immediately discontinue service to the premises by providing for a physical break in the service line until the customer has corrected the conditions in conformance with the state statutes and county ordinances relating to plumbing and water supplies and the regulations adopted pursuant thereto.

(f) The customer shall be responsible for annual testing and periodic maintenance backflow prevention devices and auxiliary valves maintained on private premises that are two inches or larger. The consumer shall maintain appropriate records verifying such testing, and send a copy of the test results to the Jones County Water System. Failure to maintain or test the system annually shall constitute a ground for discontinuance of water service to the premises until such requirements have been satisfactorily met.
(Ord. No. 201202-1o, § 1.07, 2-21-2013; Ord. No. 201306-1o, § 1.07, 7-1-2013)

Sec. 74-38. Service taps—Charges for meters and backflow preventers.

(a) Installation of new meters with backflow preventer shall be paid by the property owner and shall be as set by the rate schedule.

¾" meter	$1,500.00
1" meter	1,700.00
2" meter	3,150.00
Sewer fee	$1,700.00
Hampton Lakes Ph. 1	$6,525.00
Hampton Lakes Ph. 2	$7,025.00

The customer or his agent shall make sewer cut-ins.

Any special area fees set by the board of commissioners shall supersede these standard fees.

(b) Additional costs may be added for boring under roadways.

(c) These costs may be adjusted from time to time by resolution of the board of commissioners.

(d) The above costs shall be paid at the time the application for metered service is made to the county.

(e) Water meters cannot be moved from one property to another. Once installed the water meters must remain on the lot for which it was purchased. All meters shall remain the property of the county and may be replaced at the discretion of the water system.
(Ord. No. 201202-1o, § 1.08, 2-21-2013; Ord. No. 201306-1o, § 1.08, 7-1-2013)

Sec. 74-39. Service taps-fixtures and equipment.

The county will furnish and maintain at its own cost all necessary fittings, pipes, appliances, including all meters and meter boxes, to deliver water to the consumer's pipeline, at a point just inside the curb line on the street, and just outside the property line in alleys or other public places; all such fittings, pipes, appliances, meters and meter boxes shall remain the property of county, and shall at all times be accessible to county and under its control. The service line from the curb box or meter to the consumer's premises shall be laid and maintained by the applicant at applicant's own cost. The line shall be of ample size, of standard weight and quality, and all cutoffs, valves, fixtures, and appliances furnished by the consumer shall be maintained in good order and condition. All builders or developers, as the case may be, must install a "bleed valve" on all water lines installed in street cui-de-sacs.
(Ord. No. 201202-1o, § 1.09, 2-21-2013; Ord. No. 201306-1o, § 1.09, 7-1-2013)

Sec. 74-40. Service taps—Number of meters.

(a) All customers who have more than one residence on a one-inch or smaller meter shall pay an increased minimum monthly fee as described in the rate schedule.

(b) Customers will be allowed to have one additional meter for the purposes of irrigation. No sanitary sewer charges shall be charged to the irrigation meter registering water usage that does not enter the sanitary sewer system. Installation cost (tap fee) for the irrigation meter shall be charged at the same rate as a new service tap.

A pressure regulating valve shall be installed and maintained by the consumer if the static service pressure exceeds 70 pounds per square inch (psi). The pressure-regulating valve shall be located between the meter and the first point of water use, or first point of division in the pipe, and shall be set at the manufacturer's recommended pressure for sprinklers.

The size of the meter shall be determined by irrigation demand.

It shall be unlawful for any person to connect or attempt to connect his residential water service to the irrigation meter for the purposes of evading sewer charges. The Jones County Water Department shall inspect all new service taps. The Jones County Water System also reserves the right to perform site inspections at any time before, during or after the irrigation system installation and to require corrective measures if requirements of this section are not satisfied.

(c) All water customers residing in a duplex or similar place of abode will comply with the rule in subsection (a) unless it is not practical; then the water system will determine the disposition of each water customer, if there is a reason to do so.

(d) Where there are three families or more living in an apartment unit and where the apartment owner charges for water as a part of the cost to the tenants, then the county will be satisfied with one meter and will charge the apartment owner for the total water consumed by the tenants and the owner will either collect a share from each tenant or will absorb the cost personally if this cost is a part of the lease agreement, but it will be the owner's responsibility to pay the county for total water registered on the water meter.
(Ord. No. 201202-1o, § 1.10, 2-21-2013; Ord. No. 201306-1o, § 1.10, 7-1-2013; Ord. No. 20174-2o, § 1, 4-18-2017)

Sec. 74-41. Service—Bypassing meter.

It shall be unlawful for any person to run any pipe around any meter with intent to defraud the county of water revenue.
(Ord. No. 201202-1o, § 1.11, 2-21-2013; Ord. No. 201306-1o, § 1.11, 7-1-2013)

Sec. 74-42. Service—Curb stop or cutoff valve requirements.

It shall be unlawful for any person other than an authorized employee of the county, or other person specifically authorized in writing by the water system, to use the curb stop between a water meter and water main, or to cut the water supply on or off thereby except in emergency.
(Ord. No. 201202-1o, § 1.12, 2-21-2013; Ord. No. 201306-1o, § 1.12, 7-1-2013)

Sec. 74-43. Connection—To system without authority.

It shall be unlawful for any person to connect any pipe to the county water system without express permission of the county.
(Ord. No. 201202-1o, § 1.13, 2-21-2013; Ord. No. 201306-1o, § 1.13, 7-1-2013)

Sec. 74-44. Connection—Making.

The making of all service connections from the meter to improvements on premises including laying pipes, setting of water service fixtures, whether on private property or on public grounds, to be served by county water shall be made by duly licensed plumbers under the supervision of the building official.
(Ord. No. 201202-1o, § 1.14, 2-21-2013; Ord. No. 201306-1o, § 1.14, 7-1-2013)

Sec. 74-45. Customer's service line—Installation, maintenance, etc.

(a) All service pipes and fixtures from the water meter to the premises shall be installed and maintained at the expense of the customer and all leaks and they shall repair other defects in the same, or if not promptly repaired, then water will be turned off until such repairs have been made.

(b) The county shall not be held responsible because of the breaking of any service pipe or apparatus, water coil, or for failure in the supply of water.

(c) The county shall in no event be responsible for damage done by water escaping from any service line owned by the consumer, nor for defects in lines or fixtures, on the property of the consumer.

(Ord. No. 201202-1o, § 1.15, 2-21-2013; Ord. No. 201306-1o, § 1.15, 7-1-2013)

Sec. 74-46. Water meters-obstructing or damaging meters or devices.

(a) It shall be unlawful to obstruct damage or hide any water meter, proportional register or any water indicating or recording device so that the inspector or meter reader or other employee of the Water System cannot find or reach the meter or device.

(b) Meters shall be unobstructed by any structure, personal property, vegetation, debris, or other materials. Should the meter be obstructed the customer will be served written notice and given seven days to clear the obstruction. This written notice will include the amount that will be billed to the customer should the water system be forced to clear the obstruction. If the customer fails to clear the obstruction within the allowed time, the obstruction will be cleared by the water system and the customer shall be billed. If an existing structure, fence, etc. That obstructs the meter cannot be effectively cleared, the meter shall be moved to an alternate location and the customer shall be responsible for the cost associated with relocating the meter.

(c) Should customer, through intent or neglect, damage the water meter causing the need for replacement; the customer shall be incurring the actual cost of replacement.
(Ord. No. 201202-1o, § 1.16, 2-21-2013; Ord. No. 201306-1o, § 1.16, 7-1-2013)

Sec. 74-47. Water meters—Reading; monthly bill.

(a) Water meters shall be read monthly to the nearest 1,000 gallons and bills rendered monthly based on such reading.

(b) Monthly rates for water service are set by the rate schedule and shall be subject to change according to the fiscal needs of the water system from time to time as determined by the board of commissioners; such monthly rates shall be published in the office of the water system where utility bills may be paid and in accordance with the most recent resolution by the board of commissioners pertaining to such rates.

(c) The monthly rate shall have a minimum monthly charge based on minimum gallons provided plus a charge for each 1,000 gallons of water used over the minimum per month.
(Ord. No. 201202-1o, § 1.17, 2-21-2013; Ord. No. 201306-1o, § 1.17, 7-1-2013)

Sec. 74-48. Water meters—Inoperative.

If any water meter shall be found to be inoperative at the end of any given billing period or to be faulty or inaccurate for any reason, the meter will be replaced or repaired as soon as possible, and the bill for water used during the current period shall be the average of the last three monthly bills unless the user can satisfactorily establish less use for such period.
(Ord. No. 201202-1o, § 1.18, 2-21-2013; Ord. No. 201306-1o, § 1.18, 7-1-2013)

Sec. 74-49. Monthly bill.

Customers will be billed monthly, unless unforeseen circumstances prevent billing. Bills are mailed on the final working day of each month, with payment due on the fifteenth of the following month. Should the fifteenth occur on a weekend or a county observed holiday, the due date will be the first working day following the fifteenth of the month.
(Ord. No. 201202-1o, § 1.19, 2-21-2013; Ord. No. 201306-1o, § 1.19, 7-1-2013)

Sec. 74-50. Monthly bill—Complaints; adjustments.

(a) If the consumer believes his bill to be in error, he shall present his claim before the bill becomes delinquent. The claim, if made after the bill has become delinquent, shall not be effective in preventing discontinuance of service as provided in this article. The consumer shall pay the bill and the payment shall not prejudice his claim protest.

(b) The county will make a special meter reading at the request of a consumer for a fee, as fixed from time to time by the board of commissioners; provided, however, that if such special reading discloses that the meter was over read, no charge will be made.

(c) Meters will be tested at the request of the consumer for a fee, as fixed from time to time by the board of commissioners; provided, however, that if the meter is found to over register, no charge will be made.
(Ord. No. 201202-1o, § 1.20, 2-21-2013; Ord. No. 201306-1o, § 1.20, 7-1-2013)

Sec. 74-51. Monthly bill—Failure to receive bill.

A failure to receive a utility bill from the county authorities shall not be an excuse for failure to pay same as required in this division.
(Ord. No. 201202-1o, § 1.21, 2-21-2013; Ord. No. 201306-1o, § 1.21, 7-1-2013)

Sec. 74-52. Monthly bill—Payments.

(a) Payment of bills may be made at the Water System office at 270 Highway 49, Macon, GA 31211 or Government Center 166 Industrial Blvd. Hwy. 11, Gray, GA 31032 or mailed to same.

(b) Acceptable methods of payment are cash, check or money order.

(c) Water system office hours are Monday through Friday, 8:00 a.m. to 5:00 p.m., excluding county observed holidays.

(d) Any partial payments received shall be applied to the oldest charges remaining unpaid on the account.
(Ord. No. 201202-1o, § 1.22, 2-21-2013; Ord. No. 201306-1o, § 1.22, 7-1-2013)

Sec. 74-53. Monthly bill—Monpayment of bills.

(a) Upon the failure of any person to pay any amount due on their account by the close of business on the due date listed tor the current bill, a penalty of ten percent of the total amount due will be added to the account.
(Ord. No. 201202-1o, § 1.23, 2-21-2013; Ord. No. 201306-1o, § 1.23, 7-1-2013)

Sec. 74-54. Monthly bill—Shut-off for nonpayment.

(a) If your payment is not received by 8:00 a.m. on the day after the due date of the bill, a $45.00 disconnect fee is automatically added to accounts with a past due balance. The balance includes charges for water service and a ten-percent of balance late fee.

(b) Any account scheduled for disconnect will not be reconnected until the entire balance of the account, including fees is paid in full.

(c) Any account holder whose account which remains disconnected for two consecutive months will be notified by regular first class and certified mail within five business days of Jones County's policy of account inactivation for repeated nonpayment of past due account balances. If we have not received any response in ten days after the mailing notice referred to above, the account will become inactive and the deposit, if any will be credited to their account balance. Any remaining outstanding balance will be turned over for collection proceedings. Should customer later reconnect services, a new application will be required. Any balance remaining on the inactive account and a deposit must be paid in full before service is reinstated.

(c) 1. Failure of a multi-dwelling property with a master meter to pay their water bill within a 60-day period will cause cut off to the master meter. One week prior to cut off, door knockers will be placed upon multi-dwelling residents homes notifying them of the forthcoming action. See attached door knocker for specifics.

(d) Any customer that has a returned check, will be mailed a letter stating that they have ten days to pay their account. Any customer that has a returned check must pay with cash or money order at either location, but the Highway 49 office will accept debit or credit cards. If not paid within the allotted time your water service will be disconnected. If you have five returned checks within a calendar year you will be required to pay with cash, money order, debit or credit cards for a period set by the Jones County Water System.

(e) Any customer whose water meter is disconnected and is later found by water system personnel to have been tampered with (turned back on) would be fined $100.00 for meter tampering. Should any customer tamper with the water meter a second time the meter will be immediately removed by the water system and the customer will be charged a fee of $25.00 for the removal of the water meter.

(f) Any customer that has their water disconnected for nonpayment must pay in person with cash or money order at either location, but we will accept debit and credit cards at the Highway 49 office only. No checks will be accepted. Payment has to be paid in full for service to be restored.

(g) The water system is authorized to turn off and discontinue water service to any property where the responsible party does not meet the agreed-upon payment schedule and make timely payments for current usage charges.

(h) Any landlord that has a renter leaving the Jones County Water System with a outstanding balance will be responsible for paying the bill. If the landlord does not pay the outstanding balance, the water will not be turned on until it is paid in full.

(i) After any customer that has their water disconnected for nonpayment, the JCWS can or will put a lien against the property for collecting any outstanding debt.

(j) The JCWS reserves the right to discontinue its service without notice for the following additional reasons:

(1) To prevent fraud or abuse.

(2) Consumer's willful disregard of the JCWS rules.

(3) Emergency repairs.

(4) Insufficiency of water supply due to circumstances beyond the JCWS control.

(5) Legal processes.

(6) Direction of public authorities.

(7) Strike, riot, fire, flood, unavoidable accident.

(Ord. No. 201202-1o, § 1.24, 2-21-2013; Ord. No. 201306-1o, § 1.24, 7-1-2013)

Sec. 74-55. Tampering—With meter.

(a) It shall be unlawful for any person to tamper with or deliberately damage a county water meter. Any such tampering or deliberate destruction shall be deemed to be a misdemeanor and shall be penalized as follows:

(1) Any customer who tampers with a water meter disconnected for non-payment shall pay a fine as described in the rate schedule.

(2) Should meter tampering result in water used being unmetered the customer shall pay an amount equal to twice the county's estimate of water consumed in excess of actual reading.

(Ord. No. 201202-1o, § 1.25, 2-21-2013; Ord. No. 201306-1o, § 1.25, 7-1-2013)

Sec. 74-56. Tampering—Illegally turning on water after cut-off for nonpayment.

It shall be unlawful for any person to cut on or use any water after such person's water service has been discontinued for nonpayment of water bills, to do so will constitute metering tampering.

(Ord. No. 201202-1o, § 1.26, 2-21-2013; Ord. No. 201306-1o, § 1.26, 7-1-2013)

Sec. 74-57. Termination of service—At water system discretion.

Should the water system, its employee or agent, [determine] that a customer is no longer occupying the residence served, it shall be permissible for the water system to disconnect service and make inactive any active account for the residence.

(Ord. No. 201202-1o, § 1.27, 2-21-2013; Ord. No. 201306-1o, § 1.27, 7-1-2013)

Sec. 74-58. Termination of service—By customer request.

Customers who have fulfilled their contract terms and wish to discontinue utility service shall give at least three days' written notice to that effect.

(Ord. No. 201202-1o, § 1.28, 2-21-2013; Ord. No. 201306-1o, § 1.28, 7-1-2013)

Sec. 74-59. Termination of service—Liability for cutoff failures.

(a) The county's liability shall be limited to the forfeiture of the right to charge a customer for utility service that is not used but is received from a service line under any of the following circumstances:

(1) After receipt of written notice to cut off utility service, the county has failed to cut off such service.

(2) The county has attempted to cut off utility service but such service has not been completely cut off.

(3) The county has completely cut off utility service, but subsequently, the cutoff develops a leak or is turned on again so that water enters the customer's pipes from the county's main or other utility service is furnished to the customer's premises.

(b) Except to the extent stated in subsection (a) of this section, the county shall not be liable for any loss or damage resulting from cutoff failures. If a customer wishes to avoid possible damage for cutoff failures, the customer shall rely exclusively on a privately owned cutoff and not on the county's cutoff. In addition, the customer and not the county shall be responsible for seeing that his plumbing is properly drained and is kept properly drained, after his water service has been cut off.
(Ord. No. 201202-1o, § 1.29, 2-21-2013; Ord. No. 201306-1o, § 1.29, 7-1-2013)

Sec. 74-60. Termination of service—Liability of customer.

(a) Each utility customer shall provide space for and exercise proper care to protect the property of the county on his premises. Upon loss or damage to such property arising from the neglect of a customer to properly care for such property, the customer shall pay the cost of necessary repairs or replacements.

(b) The customer shall bear all responsibility for installation and repairs of utilities owned by the customer and shall be liable for damage caused by the failure of utilities owned by the customer. Typically, the county owns water utilities up to and including the water meter, and the customer owns all water utilities on the customer's side of the meter. Sewer lines are typically owned by the customer inside the customer's property and by the county up to the customer's property line.

(c) Where the county furnishes utility service to a customer, such customer shall be responsible for all violations of this chapter, which occur on the premises so served. Personal participation by the customer in any such violation shall not be necessary to impose such personal responsibility on him.
(Ord. No. 201202-1o, § 1.30, 2-21-2013; Ord. No. 201306-1o, § 1.30, 7-1-2013)

Sec. 74-61. Water mains and lines—Inspection.

All pipes, meters and fixtures shall at all reasonable hours be subject to inspection by county or by its duly authorized agents.
(Ord. No. 201202-1o, § 1.31, 2-21-2013; Ord. No. 201306-1o, § 1.31, 7-1-2013)

Sec. 74-62. Water and sewer mains service lines—Leaks.

All leaks in the service or any other pipe, or fixture, on the premises of the consumer shall be immediately repaired. Upon failure to repair any such leak, the service may be discontinued until repairs are made. Should such leak cause the customer's bill to exceed the average usage based on a six-month rolling average, the customer may request an adjustment. A customer shall qualify for an adjustment only after a leak has been identified and corrected. No customer shall qualify for a leak adjustment if the customer has received a leak adjustment for the property in question at any time during the previous 12 months or 12 billing cycles. Water service disconnection shall be made due to non-abatement of surfacing sewage leaks as when approved by the Jones County Health Department or other acting sewage regulatory agency. If the Jones County Health Department advises a resident that their on-site sewage system has failed, an immediate connection shall be made to a public sewage system if such a system is available.
(Ord. No. 201202-1o, § 1.32, 2-21-2013; Ord. No. 201306-1o, § 1.32, 7-1-2013)

Sec. 74-62.1. Connections to a sewage system.

Connection shall be made to a public sewage treatment system when such system is available within 200 feet of the property line, or available in a public right-of-way abutting the property.
(Ord. No. 201202-1o, § 1.32, 2-21-2013; Ord. No. 201306-1o, § 1.32, 7-1-2013)

Sec. 74-63 Water mains and lines—Authority to prohibit waste of water.

The water system or the water system's designated representatives shall have the power to take whatever reasonable and lawful steps are necessary to prevent the unlawful use or waste of water.
(Ord. No. 201202-1o, § 1.33, 2-21-2013; Ord. No. 201306-1o, § 1.33, 7-1-2013)

Sec. 74-64. Authority to prohibit waste of water—Turning off water for violation.

Upon the discovery of the violation of any section of this Code or other ordinance regulating the use of water or any rule regulating that use, the water system or the water system's designated representatives shall discontinue water service to the person who committed such violation and to the property owned, occupied or controlled by such person.
(Ord. No. 201202-1o, § 1.34, 2-21-2013; Ord. No. 201306-1o, § 1.34, 7-1-2013)

Sec. 74-65. Water mains and lines—Turning off water for emergency or necessity.

The water system, or the officers or employees thereof may turn off the supply of water from any pipe or water main in an emergency or for repairs or extensions as necessity may require. Reasonable notice shall be given when practicable; however, neither the county, nor their officers and employees shall be held liable for any damage for turning off the water as provided in this section or for insufficient supply of water.
(Ord. No. 201202-1o, § 1.35, 2-21-2013; Ord. No. 201306-1o, § 1.35, 7-1-2013)

Sec. 74-66. Water mains and lines—Damages.

(a) The county shall in no event be responsible for maintaining any service line owned by the consumer, nor for damage done by water escaping there from, nor for defects in lines or fixtures, on the property of the consumer. The consumer shall at all times comply with all regulations of the water system, and of regulations relating to the service lines, and shall make all changes in the line as required on account of change in grade or otherwise.

(b) All damage to service pipes or street mains caused by careless or negligent work, or improper filling at excavations, shall be chargeable to the persons causing such damage, and the expense of repairing the same shall be recovered from such persons.
(Ord. No. 201202-1o, § 1.36, 2-21-2013; Ord. No. 201306-1o, § 1.36, 7-1-2013)

Sec. 74-67. Fire hydrants—Use and misuse.

(a) It shall be unlawful for any unauthorized person to use water from any fire hydrant from which county water is drawn without permission from the water system.

(b) In case of a violation of subsection (a) of this section, the water system shall impose a charge for the unauthorized use of water of:

(1) Three hundred dollars plus retail cost for water used for first-time offenders.

(2) One thousand dollars plus retail cost for water used for second-time offenders.

(3) Prosecution plus retail cost for water used for third-time offenders.

(4) Prosecution plus retail cost for water used for fourth-time offenders.

The retail cost for water used will be the rate in effect.

(c) Tampering. It shall be unlawful to tamper, plug or interfere with any fire hydrant from which county water is drawn without written authorization.

(d) Apparatus without backflow prevention. It shall be unlawful to connect any vehicle, container or equipment, which is subject to the danger of backflow or back siphonage to a fire hydrant.

(1) The county shall be responsible for the proper operation of all fire hydrants that are owned and maintained by the Jones County Fire and Water Departments.
(Ord. No. 201202-1o, § 1.37, 2-21-2013; Ord. No. 201306-1o, § 1.37, 7-1-2013)

Sec. 74-68. Fire hydrants—Charges for use.

(a) *Deposit.* A person desiring to use water from a fire hydrant shall be required to deposit $1,500.00 for use of a temporary meter with backflow preventer and, upon approval by the water system or the system's designee, shall be allowed to use metered water from fire hydrants. Upon return of the temporary meter and provided that satisfactory evidence is presented that all water used was metered and is paid for, the water system or the system's

designee is authorized to refund the deposit made without interest. All water used must be metered. It shall be unlawful to draw water from any hydrant without the meter properly installed.

(b) *Schedule of charges.* After a hydrant meter is issued, charges for the use of water from hydrants shall be based on the metered usage and the standard rate for water used as measured through the meter. It is the responsibility of the customer to ensure that the meter is not used by others. The person to whom a meter is issued shall be responsible for all water that is used through the meter.

(c) *Monthly meter readings.* The person to whom a meter is issued is required to make monthly readings of the water used and to submit such readings and payment for water used to the water system or the system's designee. Upon request by the water system or the system's designee, the meter must be brought in for verification or testing.

(d) *Minimum charge.* The minimum rate for the use of a fire hydrant shall be as established by the county.

(e) *Failure to pay bill.* If the water bill is not paid within 90 days from the date of the bill, the meter will be confiscated. If the meter is not located and/or returned to the water system, the deposit will be forfeited.
(Ord. No. 201202-1o, § 1.38, 2-21-2013; Ord. No. 201306-1o, § 1.38, 7-1-2013)

Sec. 74-69. Rates—Authority to fix water rates.

(a) The board of commissioners shall fix rates for which water and or sewer shall be furnished for all purposes within the area served by the county water system. Water rates shall be sufficient to pay for the operation, maintenance, reserves, debt service, additions, extensions and betterments of the water system, including those reasonably required for the anticipated growth of the area served, and should be sufficient to provide for the accumulation of reserves for improvements that cannot be acquired from a single year's receipts.

(b) The authority granted in subsection (a) of this section shall apply to all charges made by the department of water including, without limitation:

(1) Deposits for water service;

(2) Use of fire hydrants and deposits for fire hydrant meters and keys;

(3) Filling swimming and other pools;

(4) Turning off water, locking the meter, cutting at main, plugging the service or removing the meter;

(5) Moving water meters;

(6) Installation of meters;

(7) Purchase, installation and service of meters.
(Ord. No. 201202-1o, § 1.39, 2-21-2013; Ord. No. 201306-1o, § 1.39, 7-1-2013)

Sec. 74-70. Rates—Deposits for water service.

(a) The water system is authorized and directed to require deposits from customers as follows:

(1) Prior to, and as a condition of, the establishment of water service at any address within the service area of the water department has to pay a deposit.

(2) Prior to, and as a condition of, the restoration of water service terminated for nonpayment of charges due at any address within the service area of the water department, after any credit from a deposit previously made by the customer is applied to charges due.

(3) Any outstanding past due balance has to be paid in full prior to transferring service from one family member to another family member in the same residence or any other residence.

(4) Prior to, and a condition of restoration of water service that has been disconnected for nonpayment of charges will have to pay a deposit if one is not on file with the water department. No exceptions.

(b) The amount of the deposit required shall be in accordance with the rate schedule.

(c) When accounts are closed, the deposit credited to such accounts shall be applied to any unpaid balance. Any credit remaining after unpaid balances are satisfied will be refunded without interest.

(d) For multiple-dwelling unit accounts, the deposit shall be $60.00 per living unit.
(Ord. No. 201202-1o, § 1.40, 2-21-2013; Ord. No. 201306-1o, § 1.40, 7-1-2013)

Sec. 74-71. Special consideration—Grease recovery systems.

(a) Where required. Grease, fats and oils recovery systems shall be installed where grease-laden waste from food preparation, food processing or other commercial use will be discharged into the Jones County wastewater collection system.

(b) Technology required. An approved grease, fats and oils recovery system shall be installed consisting of one or a combination of the following methods:

(1) Passive technology that is an approved exterior grease trap.

(2) Active technology including:

a. An approved grease recovery device; or

b. An approved solids transfer/grease transfer device.

(c) Grease, oil, and sand shall be removed by suitable aeration tanks, grease flotation tanks, settling basins, or other suitable equipment when they are necessary for the proper handling of liquid wastes containing grease in excessive amounts, or any flammable wastes, sand, or other harmful ingredients, except that such equipment shall not be required for private living quarters or dwelling units.

(d) All equipment shall be of a type and capacity approved by the board of commissioners and shall be located to be readily and easily accessible for cleaning by the owner, and inspection at regular intervals.

(e) Where installed, all grease, oil and sand removal equipment shall be maintained by the owner, at his expense, in continuously efficient operation at all times.
(Ord. No. 201202-1o, § 1.41, 2-21-2013; Ord. No. 201306-1o, § 1.41, 7-1-2013)

Sec. 74-72. Discharge of grease trap contents prohibited.

The discharge of the materials collected from grease traps into the county wastewater system is prohibited.
(Ord. No. 201202-1o, § 1.42, 2-21-2013; Ord. No. 201306-1o, § 1.42, 7-1-2013)

Sec. 74-73. Theft of water services.

It shall be unlawful to bypass or remove a water meter in an attempt to steal or receive un-metered water. No person shall attempt to tap onto water system without approval from the county, including application for services.

(a) Theft of water services will be deemed a misdemeanor by the court unless amount of stolen water exceeds lawful amount of a misdemeanor. Cases that exceed the lawful amount of a misdemeanor will be prosecuted as a felony, and up to 12 months imprisonment.

(b) Penalty for theft is $500.00 payable to Jones County Water Department.

(c) In addition to penalty, customer is responsible for payment of all labor and materials to rectify water theft. Including, but not limited to, replacement of locking mechanism; replacement of water meter; removal of any system bypassing water meter.

(d) In addition to penalty, labor and materials, the customer shall pay twice the county's estimate of water consumed due to theft.

(Ord. No. 201202-1o, § 1.43, 2-21-2013; Ord. No. 201306-1o, § 1.43, 7-1-2013)

Sec. 74-74. Water rate cost adjustments.

Annually, county will compare and review water rates based on actual unit costs. At this time, county will adjust water rates based on Consumer Price Index (CPI) or other effective economic indicator.
(Ord. No. 201202-1o, § 1.44, 2-21-2013; Ord. No. 201306-1o, § 1.44, 7-1-2013)

Sec. 74-75. Water meters.

Effective August 1, 2005, all future development water meters shall be of the automated type and shall comply with "Automated Meter Reading System" requirements, including transceiver device.
(Ord. No. 201202-1o, § 1.45, 2-21-2013; Ord. No. 201306-1o, § 1.45, 7-1-2013)

Sec. 74-76. Permanent easement restrictions.

Permanent easements for water and wastewater facilities are for the county to install, inspect, observe, measure, sample, repair, protect, maintain and operate any portion of the water or wastewater facilities lying with such easement. It is essential that access to the easement not be obstructed. Although the property owner owns the underlying fee simple title to the land within the easement area subject to the easement rights, all construction, digging, grubbing, clearing, filling, or other earth moving or construction activities by the owner in the permanent easement area are prohibited without prior permission from the county administrator or his or her representative. Permanent structures shall not be permitted within the easement or easement setback. In addition, nonstructural improvements on easements such as walkways and landscaping are subject to removal at the owner's risk. The county shall not be responsible for replacing anything within the easement that must be removed to access, protect, repair, or maintain the facilities.
(Ord. No. 201202-1o, § 1.46, 2-21-2013; Ord. No. 201306-1o, § 1.46, 7-1-2013)

Sec. 74-77. Rate schedule.

The following rates took effect July 1, 2013:

Water rates	**Single dwelling**	**Multiple dwellings less than 2"**	**2" meter**
Up to 2,000 gallons	$17.00	$23.65	$43.62
Per thousand over 2,000	3.00	3.00	3.00

City of Gray

Per thousand	$3.00

Sewer rates	**Single dwelling**	**Mult. dwellings/ Commercial rates**
Base fee	$15.00	$15.00
Usage fee per thousand	2.60	2.60
Ceiling	50.00	N/A

TAP fees	**Rates**
¾-inch meter	$1,500.00
1-inch meter	1,700.00
2-inch meter	3,150.00
Sewer fee	1,700.00
Hampton Lakes Ph. 1 sewer	6,525.00
Hampton Lakes Ph. 2 sewer	7,025.00

Returned check fees	Rate
Per check	$35.00 or bank charges, if higher

Bill deposit	Rates
¾-inch water meter and sewer	$175.00
¾-inch water only	100.00
1-inch water meter and sewer	190.00
1-inch water meter	125.00
2-inch water meter and sewer	265.00
2-inch water meter	200.00

Miscellaneous	Rates
Special water rates	$3.00
Penalty	10 percent
Disconnect fee	45.00
Fine for tampering	100.00
Fee for meter removal due to tampering	50.00
Penalty for theft	500.00
* Fee for re-reading meter rate	10.00
Fee for testing meter	10.00
Minimum for using a fire hydrant	25.00

* There are customers who argue the amount of their bill, and request a re-read anytime their bill is over $10.00. This rate could be applied as a way to stop customers from abusing their right to a re-read.

(Ord. No. 201202-1o, § 1.46, 2-21-2012; Ord. No. 201306-1o, § 1.46, 7-1-2013)

Secs. 74-78—74-130. Reserved.

ARTICLE III. SEWERS

Sec. 74-131. Agreement for service.

The board of commissioners has entered into an agreement with the Macon Water Authority which allows the Macon Water Authority to serve sanitary sewer at a price rate reasonably based on the cost to provide this service to areas in the county where the cost of installing the sewer mains are not borne by the board of commissioners or county water system. Sewer service by the Macon Water Authority within the county shall not exclude others from providing sewer service within the county.
(Res. of 11-4-1997)

Sec. 74-132. Authority to read meters.

The board of commissioners agree to allow the Macon Water Authority personnel to read water meters owned by the county water system in order to provide sewer billing to the customers with sanitary sewer service provided by the Macon Water Authority.
(Res. of 11-4-1997)

Sec. 74-133. Eminent domain.

The board of commissioners, in those cases where the commission finds it to be necessary, will exercise the right of condemnation where required to provide easement for construction, maintenance, or replacement of sewer mains and appurtenances owned by the Macon Water Authority, only when these structures cannot be located within existing public road rights-of-way. All cost of the condemnation shall be borne by those other than the board of commissioners or the county water system.
(Res. of 11-4-1997)

Secs. 74-134—74-149. Reserved.

ARTICLE IV. ILLICIT DISCHARGE AND ILLEGAL CONNECTION

DIVISION 1. GENERAL PROVISIONS

Sec. 74-150. Purpose and intent.

The purpose of this article is to protect the public health, safety, environment and general welfare through the regulation of non-stormwater discharges to the Jones County separate storm sewer system to the maximum extent practicable as required by Federal law. This article establishes methods for controlling the introduction of pollutants into the Jones County separate storm sewer system in order to comply with requirements of the National Pollutant Discharge Elimination System (NPDES) permit process. The objectives of this article are to:

(1) Regulate the contribution of pollutants to the Jones County separate storm sewer system by any person;

(2) Prohibit illicit discharges and illegal connections to the Jones County separate storm sewer system;

(3) Prevent non-stormwater discharges, generated as a result of spills, inappropriate dumping or disposal, to the Jones County separate storm sewer system; and

(4) To establish legal authority to carry out all inspection, surveillance, monitoring and enforcement procedures necessary to ensure compliance with this ordinance.

(Ord. No. 200603-2o, § 1.1, 3-7-2006)

Sec. 74-151. Applicability.

The provisions of this article shall apply throughout the MS4 area of Jones County.
(Ord. No. 200603-2o, § 1.2, 3-7-2006)

Sec. 74-152. Compatibility with other regulations.

This article is not intended to modify or repeal any other ordinance, rule, regulation, other provision of law. The requirements of this article are in addition to the requirements of any other ordinance, rule, regulation, or other provision of law, and where any provision of this ordinance imposes restrictions different from those imposed by any other ordinance, rule, regulation, or other provision of law, whichever provision is more restrictive or imposes higher protective standards for human health or the environment shall control.
(Ord. No. 200603-2o, § 1.3, 3-7-2006)

Sec. 74-153. Severability.

If the provisions of any section, subsection, paragraph, subdivision or clause of this article shall be adjudged invalid by a court of competent jurisdiction, such judgment shall not affect or invalidate the remainder of any section, subsection, paragraph, subdivision or clause of this article.
(Ord. No. 200603-2o, § 1.4, 3-7-2006)

Sec. 74-154. Responsibility for administration.

The zoning director or any county employee designated by the zoning director shall administer, implement, and enforce the provisions of this article.
(Ord. No. 200603-2o, § 1.5, 3-7-2006)

Secs. 74-155—74-159. Reserved.

DIVISION 2. DEFINITIONS

Sec. 74-160. Definitions.

As used in this article, unless different meaning is apparent from the content:

Accidental discharge means a discharge prohibited by this ordinance which occurs by chance and without planning or thought prior to occurrence.

Clean Water Act means the Federal Water Pollution Control Act (33 U.S.C. § 1251 et seq.), and any subsequent amendments thereto.

Construction activity means activities subject to the Georgia Erosion and Sedimentation Control Act or NPDES General Construction Permits. These include construction projects resulting in land disturbance. Such activities include but are not limited to clearing and grubbing, grading, excavating, and demolition.

Illicit discharge means any direct or indirect non-stormwater discharge to the Jones County separate storm sewer system, except as exempted in division 3 of this article.

Illegal connection means either of the following:

(a) Any pipe, open channel, drain or conveyance, whether on the surface or subsurface, which allows an illicit discharge to enter the storm drain system including but not limited to any conveyances which allow any non-stormwater discharge including sewage, process wastewater, and wash water to enter the storm drain system, regardless of whether such pipe, open channel, drain or conveyance has been previously allowed, permitted, or approved by an authorized enforcement agency; or

(b) Any pipe, open channel, drain or conveyance connected to the Jones County separate storm sewer system which has not been documented in plans, maps, or equivalent records and approved by an authorized enforcement agency.

Industrial activity means activities subject to NPDES Industrial Permits as defined in 40 CFR, Section 122.26 (b)(14).

National Pollutant Discharge Elimination System (NPDES) Storm Water Discharge Permit means a permit issued by the Georgia EPD under authority delegated pursuant to 33 USC § 1342(b) that authorizes the discharge of pollutants to waters of the United States, whether the permit is applicable on an individual, group, or general area-wide basis.

Jones County separate storm sewer system means any facility designed or used for collecting and/or conveying stormwater, including but not limited to any roads with drainage systems, highways, county streets, curbs, gutters, inlets, catch basins, piped storm drains, pumping facilities, structural stormwater controls, ditches, swales, natural and man-made or altered drainage channels, reservoirs, and other drainage structures, and which is:

(a) Owned or maintained by Jones County;

(b) Not a combined sewer; and

(c) Not part of a publicly-owned treatment works; and

(d) Located within the MS4 area.

Non-stormwater discharge means any discharge to the storm drain system that is not composed entirely of stormwater.

Person means, except to the extent exempted from this ordinance, any individual, partnership, firm, association, joint venture, public or private corporation, trust, estate, commission, board, public or private institution, utility, cooperative, city, county or other political subdivision of the state, any interstate body or any other legal entity.

Pollutant means anything which causes or contributes to pollution. Pollutants may include, but are not limited to: paints, varnishes, and solvents; petroleum hydrocarbons; automotive fluids; cooking grease; detergents (biodegradable or otherwise); degreasers; cleaning chemicals; non-hazardous liquid and solid wastes and yard wastes; refuse, rubbish, garbage, litter, or other discarded or abandoned objects and accumulations, so that same may

cause or contribute to pollution; floatables; pesticides, herbicides, and fertilizers; liquid and solid wastes; sewage, fecal coliform and pathogens; dissolved and particulate metals; animal wastes; wastes and residues that result from constructing a building or structure; concrete and cement; and noxious or offensive matter of any kind.

Pollution means the contamination or other alteration of any water's physical, chemical or biological properties by the addition of any constituent and includes but is not limited to, a change in temperature, taste, color, turbidity, or odor of such waters, or the discharge of any liquid, gaseous, solid, radioactive, or other substance into any such waters as will or is likely to create a nuisance or render such waters harmful, detrimental or injurious to the public health, safety, welfare, or environment, or to domestic, commercial, industrial, agricultural, recreational, or other legitimate beneficial uses, or to livestock, wild animals, birds, fish or other aquatic life.

Premises mean any building, lot, parcel of land, or portion of land whether improved or unimproved including adjacent sidewalks and parking strips.

State waters means any and all rivers, streams, creeks, branches, lakes, reservoirs, ponds, drainage systems, springs, wells, and other bodies of surface and subsurface water, natural or artificial, lying within or forming a part of the boundaries of the State of Georgia which are not entirely confined and retained completely upon the property of a single person.

Stormwater runoff or *stormwater* means any surface flow, runoff, and drainage consisting entirely of water from any form of natural precipitation, and resulting from such precipitation.

Structural stormwater control means a structural stormwater management facility or device that controls stormwater runoff and changes the characteristics of that runoff including, but not limited to, the quantity and quality, the period of release or the velocity of flow.
(Ord. No. 200603-2o, § 2, 3-7-2006)

DIVISION 3. PROHIBITIONS

Sec. 74-161. Prohibition of illicit discharges.

No person shall throw, drain, or otherwise discharge, cause, or allow others under its control to throw, drain, or otherwise discharge into the Jones County separate storm sewer system any pollutants or waters containing any pollutants, other than stormwater.

The following discharges are exempt from the prohibition provision above:

(1) Water line flushing performed by a government agency, other potable water sources, landscape irrigation or lawn watering, diverted stream flows, rising ground water, ground water infiltration to storm drains, uncontaminated pumped ground water,

foundation or footing drains (not including active groundwater dewatering systems), crawl space pumps, air conditioning condensation, springs, natural riparian habitat or wetland flows, and any other water source not containing pollutants;

(2) Discharges or flows from fire fighting, and other discharges specified in writing by zoning director as being necessary to protect public health and safety;

(3) The prohibition provision above shall not apply to any non-stormwater discharge permitted under an NPDES permit or order issued to the discharger and administered under the authority of the state and the Federal Environmental Protection Agency, provided that the discharger is in full compliance with all requirements of the permit, waiver, or order and other applicable laws and regulations, and provided that written approval has been granted for any discharge to the Jones County separate storm sewer system.

(Ord. No. 200603-2o, § 3.1, 3-7-2006)

Sec. 74-162. Prohibition of illegal connections.

The construction, connection, use, maintenance or continued existence of any illegal connection to the Jones County separate storm sewer system is prohibited.

(1) This prohibition expressly includes, without limitation, illegal connections made in the past, regardless of whether the connection was permissible under law or practices applicable or prevailing at the time of connection.

(2) A person violates this ordinance if the person connects a line conveying sewage to the Jones County separate storm sewer system, or allows such a connection to continue.

(3) Improper connections in violation of this article must be disconnected and redirected, if necessary, to an approved onsite wastewater management system or the sanitary sewer system upon approval of the county health department or the county water system.

(4) Any drain or conveyance that has not been documented in plans, maps or equivalent, and which may be connected to the storm sewer system, shall be located by the owner or occupant of that property upon receipt of written notice of violation from the zoning director requiring that such locating be completed. Such notice will specify a reasonable time period within which the location of the drain or conveyance is to be completed, that the drain or conveyance be identified as storm sewer, sanitary sewer or other, and that the outfall location or point of connection to the storm sewer system, sanitary sewer system or other discharge point be identified. Results of these investigations are to be documented and provided to the zoning director.

(Ord. No. 200603-2o, § 3.2, 3-7-2006)

Secs. 74-163—74-169. Reserved.

DIVISION 4. COMPLIANCE, ACCESS, INSPECTION AND NOTIFICATION

Sec. 74-170. Industrial or construction activity discharges.

Any person subject to an industrial or construction activity NPDES stormwater discharge permit shall comply with all provisions of such permit. Proof of compliance with said permit may be required in a form acceptable to the Zoning Director prior to allowing discharges to the Jones County separate storm sewer system.
(Ord. No. 200603-2o, § 4, 3-7-2006)

Sec. 74-171. Access and inspection of properties and facilities.

The zoning director or any county employee designated by the zoning director shall be permitted to enter and inspect properties and facilities at reasonable times as often as may be necessary to determine compliance with this article.

(1) If a property or facility has security measures in force which require proper identification and clearance before entry into its premises, the owner or operator shall make the necessary arrangements to allow access to representatives of Jones County.

(2) The owner or operator shall allow the zoning director or any county employee designated by the zoning director or ready access to all parts of the premises for the purposes of inspection, sampling, photography, videotaping, examination and copying of any records that are required under the conditions of an NPDES permit to discharge stormwater.

(3) The zoning director or any county employee designated by the zoning director shall have the right to set up on any property or facility such devices as are necessary in the opinion of the zoning director or any county employee designated by the zoning director to conduct monitoring and/or sampling of flow discharges.

(4) The zoning director or any county employee designated by the zoning director may require the owner or operator to install monitoring equipment and perform monitoring as necessary, and make the monitoring data available to the zoning director or any county employee designated by the zoning director. This sampling and monitoring equipment shall be maintained at all times in a safe and proper operating condition by the owner or operator at his/her own expense. All devices used to measure flow and quality shall be calibrated to ensure their accuracy.

(5) Any temporary or permanent obstruction to safe and easy access to the property or facility to be inspected and/or sampled shall be promptly removed by the owner or operator at the written or oral request of the zoning director or any county employee designated by the zoning director and shall not be replaced. The costs of clearing such access shall be borne by the owner or operator.

(6) Unreasonable delays in allowing the zoning director or any county employee designated by the zoning director access to a facility is a violation of this article.

(7) If the zoning director or any county employee designated by the zoning director has been refused access to any part of the premises from which stormwater is discharged, and the zoning director or any county employee designated by the zoning director is able to demonstrate probable cause to believe that there may be a violation of this article, or that there is a need to inspect and/or sample as part of a routine inspection and sampling program designed to verify compliance with this ordinance or any order issued hereunder, or to protect the overall public health, safety, environment and welfare of the community, then the zoning director or any county employee designated by the zoning director may seek issuance of a search warrant from any court of competent jurisdiction.

(Ord. No. 200603-2o, § 5, 3-7-2006)

Sec. 74-172. Notification of accidental discharges and spills.

Notwithstanding other requirements of law, as soon as any person responsible for a facility, activity or operation, or responsible for emergency response for a facility, activity or operation has information of any known or suspected release of pollutants or non-stormwater discharges from that facility or operation which are resulting or may result in illicit discharges or pollutants discharging into stormwater, the Jones County separate storm sewer system, state waters, or waters of the U.S., said person shall take all necessary steps to ensure the discovery, containment, and cleanup of such release so as to minimize the effects of the discharge.

Said person shall notify the authorized enforcement agency in person or by phone, facsimile or in person no later than 24 hours of the nature, quantity and time of occurrence of the discharge. Notifications in person or by phone shall be confirmed by written notice addressed and mailed to the zoning director within three business days of the phone or in person notice. If the discharge of prohibited materials emanates from a commercial or industrial establishment, the owner or operator of such establishment shall also retain an on-site written record of the discharge and the actions taken to prevent its recurrence. Such records shall be retained for at least three years. Said person shall also take immediate steps to ensure no recurrence of the discharge or spill.

In the event of such a release of hazardous materials, emergency response agencies and/or other appropriate agencies shall be immediately notified.

Failure to provide notification of a release as provided above is a violation of this article.

(Ord. No. 200603-2o, § 6, 3-7-2006)

Secs. 74-173—74-179. Reserved.

DIVISION 5. VIOLATIONS, ENFORCEMENT AND PENALTIES

Sec. 74-180. Violations.

It shall be unlawful for any person to violate any provision or fail to comply with any of the requirements of this article. Any person who has violated or continues to violate the provisions of this article, may be subject to the enforcement actions outlined in this section or may be restrained by injunction or otherwise abated in a manner provided by law.

In the event the violation constitutes an immediate danger to public health or public safety, the zoning director or any county employee designated by the zoning director is authorized to enter upon the subject private property, without giving prior notice, to take any and all measures necessary to abate the violation and/or restore the property. The zoning director is authorized to seek costs of the abatement as outlined in section 74-184.
(Ord. No. 200603-2o, § 7.1, 3-7-2006)

Sec. 74-181. Notice of violation.

Whenever the zoning director or any county employee designated by the zoning director finds that a violation of this article has occurred, the zoning director or any county employee designated by the zoning director may order compliance by written notice of violation.

(a) The notice of violation shall contain:

(1) The name and address of the alleged violator;

(2) The address when available or a description of the building, structure or land upon which the violation is occurring, or has occurred;

(3) A statement specifying the nature of the violation;

(4) A description of the remedial measures necessary to restore compliance with this ordinance and a time schedule for the completion of such remedial action;

(5) A statement of the penalty or penalties that shall or may be assessed against the person to whom the notice of violation is directed; and

(6) A statement that the determination of violation may be appealed to the county board of appeals and adjustments by filing a written notice of appeal within 30 days of service of notice of violation.

(b) Such notice may require without limitation:

(1) The performance of monitoring, analyses, and reporting;

(2) The elimination of illicit discharges and illegal connections;

(3) That violating discharges, practices, or operations shall cease and desist;

(4) The abatement or remediation of stormwater pollution or contamination hazards and the restoration of any affected property;

(5) Payment of costs to cover administrative and abatement costs; and

(6) The implementation of pollution prevention practices.

(Ord. No. 200603-2o, § 7.2, 3-7-2006)

Sec. 74-182. Appeal of notice of violation.

Any person receiving a notice of violation may appeal the determination of the zoning director or any county employee designated by the zoning director. The notice of appeal must be received within 30 days from the date of the notice of violation. Hearing on the appeal

before the county board of appeals and adjustments shall take place within 45 days from the date of receipt of the notice of appeal. The decision of the appropriate authority or their designee shall be final.
(Ord. No. 200603-2o, § 7.3, 3-7-2006)

Sec. 74-183. Enforcement measures after appeal.

If the violation has not been corrected pursuant to the requirements set forth in the notice of violation, or, in the event of an appeal, within 30 days of the decision of the appropriate authority upholding the decision of the zoning director or any county employee designated by the zoning director, then representatives of Jones County may enter upon the subject private property and are authorized to take any and all measures necessary to abate the violation and/or restore the property. It shall be unlawful for any person, owner, agent or person in possession of any premises to refuse to allow the government agency or designated contractor to enter upon the premises for the purposes set forth above.
(Ord. No. 200603-2o, § 7.4, 3-7-2006)

Sec. 74-184. Costs of abatement of the violation.

Within 30 days after abatement of the violation, the owner of the property will be notified of the cost of abatement, including administrative costs. The property owner may file a written protest objecting to the assessment or to the amount of the assessment within 30 days of such notice. If the amount due is not paid within 30 days after receipt of the notice, or if an appeal is taken, within 30 days after a decision on said appeal, the charges shall become a special assessment against the property and shall constitute a lien on the property for the amount of the assessment.

Any person violating any of the provisions of this article shall become liable to Jones County by reason of such violation.
(Ord. No. 200603-2o, § 7.5, 3-7-2006)

Sec. 74-185. Civil penalties.

In the event the alleged violator fails to take the remedial measures set forth in the notice of violation or otherwise fails to cure the violations described therein within ten days, or such greater period as the zoning director shall deem appropriate, after the zoning director has taken one or more of the actions described above, the zoning director may impose a penalty not to exceed $1,000.00 (depending on the severity of the violation) for each day the violation remains unremedied after receipt of the notice of violation.
(Ord. No. 200603-2o, § 7.6, 3-7-2006)

Sec. 74-186. Criminal penalties.

For intentional and flagrant violations of this article, the zoning director may issue a citation to the alleged violator requiring such person to appear in Superior court to answer

charges for such violation. Upon conviction, such person shall be punished by a fine not to exceed $1,000.00 or imprisonment for 60 days or both. Each act of violation and each day upon which any violation shall occur shall constitute a separate offense.
(Ord. No. 200603-2o, § 7.7, 3-7-2006)

Sec. 74-187. Violations deemed a public nuisance.

In addition to the enforcement processes and penalties provided, any condition caused or permitted to exist in violation of any of the provisions of this article is a threat to public health, safety, welfare, and environment and is declared and deemed a nuisance, and may be abated by injunctive or other equitable relief as provided by law.
(Ord. No. 200603-2o, § 7.8, 3-7-2006)

Sec. 74-188. Remedies not exclusive.

The remedies listed in this division are not exclusive of any other remedies available under any applicable federal, state or local law and the zoning director may seek cumulative remedies.

The zoning director may recover attorney's fees, court costs, and other expenses associated with enforcement of this article, including sampling and monitoring expenses.
(Ord. No. 200603-2o, § 7.9, 3-7-2006)

APPENDIX A

COMPREHENSIVE LAND DEVELOPMENT*

Article I. Purpose and Enactment

Article II. Short Title

Article III. Definitions of Terms Used in This Resolution

Section 31. General.
Section 32. Specific definitions.

Article IV. Establishment of Districts

Section 41. Division of the unincorporated area of the county into districts.
Section 42. Incorporation of the zoning maps.
Section 43. Map amendment.
Section 44. Rules for determining boundaries.
Section 45. Comprehensiveness of zoning districts.

Article V. Application of Regulations

Section 51. Use.
Section 52. Building height and density.
Section 53. Lots and yards.

Article VI. General Provisions

Section 61. Nonconforming lots, nonconforming uses of land, nonconforming structures, and nonconforming uses of structures and premises.
Section 62. Off-street automobile parking.

***Editor's note—**Printed herein is the county's comprehensive land development regulations, including zoning and subdivision regulations, as revised by the board of commissioners on September 15, 1987, and amended through March 20, 2012. Obvious misspellings and punctuation errors have been corrected without notation. For stylistic purposes headings and catchlines have been made uniform and the same system of capitalization, citation to state statutes, and expression of numbers in text as appears in the Code of Ordinances has been used. Additions made for clarity are indicated by brackets.

Cross references—Any zoning resolution or ordinance saved from repeal, § 1-14(10); adult entertainment establishments, § 10-31 et seq.; buildings, construction and related activities, ch. 18; environment, ch. 34; floods, ch. 42; historic preservation, ch. 50; roads, ch. 58; water and sewers, ch. 74.

State law references—Approval by planning commission or governing authority on plat of subdivision required for filing or recording in superior court clerk's office, O.C.G.A. § 15-6-67(d); the Zoning Procedures Law, O.C.G.A. § 36-66-1 et seq.; local government zoning powers, O.C.G.A. § 36-66-2; Georgia Land Sales Act, O.C.G.A. § 44-3-1 et seq.; authority to adopt plans and exercise the power of zoning, Ga. Const. art. IX, § II, ¶ IV.

Section 63. Off-street loading and unloading space.
Section 64. Control of curb cuts and vision clearance.
Section 65. Classification of streets.
Section 66. Storage and parking of trailers and vehicles.
Section 67. Screening and lighting.
Section 68. Minimum distance between buildings.

Article VII. Use Requirements by District

Section 71. AG-1 agricultural/rural district.
Section 72. Residential districts.
Section 73. Commercial districts.
Section 74. Wholesale and industrial districts.

Article VIII. Other Requirements by Districts

Section 81. Minimum lot area, lot width, and maximum lot coverage.
Section 82. Minimum setbacks and maximum building heights.
Section 83. HD historic overlay zoning district.
Section 84. Buffer and landscape standards for gateway overlay zoning district.
Section 85. Water resource protection overlay districts.
Section 86. Bypass design overlay district.

Article IX. Special Provisions

Section 91. Manufactured (mobile) homes and manufactured home parks.
Section 92. Single-family attached residences.
Section 93. Accessory and temporary buildings.
Section 94. Additional dwellings on a single lot.
Section 95. Home occupations.
Section 96. Automobile service stations.
Section 97. Signs.
Section 98. Nonstructural uses.
Section 99. Adult entertainment establishments.

Article X. Exceptions and Modifications

Section 101. Planned unit developments.
Section 102. Yard requirements.
Section 103. Access to public streets.
Section 104. Front and side yard setbacks for dwellings.
Section 105. Underground buildings.
Section 106. Site built homes.

Article XI. Zoning Administration

Section 111. Duties and powers of the zoning enforcement officer.
Section 112. Permits and certificates.
Section 113. Establishment of the board of appeals and adjustments.
Section 114. Duties and powers of the board of appeals and adjustments.

Section 115. Procedure for appeal of an administrative decision before the board of appeals and adjustments.
Section 116. Procedure for application for a variance from the provisions of this resolution.
Section 117. Procedure for application for a conditional use.
Section 118. Procedures and standards governing the adoption of a zoning ordinance or comprehensive land development resolution.

Article XII. Procedures for Subdivision Plat Approval

Section 121. Platting authority.
Section 122. Pre-application review.
Section 123. Procedure for preliminary plat approval.
Section 124. Preliminary plat specifications.
Section 125. Final plat procedure.
Section 126. Final plat specifications.
Section 127. Certificate of final approval by the planning and zoning commission.
Section 128. Recording of final plat.
Section 129. Subdivisions not exceeding ten lots.

Article XIII. General Requirements and Minimum Standards of Design for the Subdivision of Land

Section 131. General design requirements.
Section 132. General requirements for streets and other rights-of-way.
Section 133. Right-of-way width requirements.
Section 134. Street design requirements.
Section 135. Design standards for blocks and lots.
Section 136. Provision of public land.

Article XIV. Required Subdivision Improvements

Section 141. Monuments.
Section 142. Special classification of streets for construction.
Section 143. Additional street design requirements.
Section 144. Basic construction requirements for all classes of streets.
Section 145. Roadway surfacing and paving.
Section 146. Installation of utilities.
Section 147. Sidewalks and street signs.
Section 148. Administrative procedures.
Section 149. Testing.

Article XV. Procedures for Requesting an Amendment to the Comprehensive Land Development Resolution

Section 151. Initiating the hearing.
Section 152. Notice of hearings.
Section 153. Conducting the hearing.
Section 154. Standards for decision.
Section 155. Request for rehearing.

Section 156. Printing and distributing this article.
Section 157. Membership, appointment and term.

Article XVI. Enforcement and Remedies

Section 161. Violation.
Section 162. Zoning enforcement.
Section 163. Subdivision enforcement.
Section 164. Remedies.

Article XVII. Legal Status Provisions

Section 171. Conflict with other laws.
Section 172. Validity.
Section 173. Repealed resolutions and ordinances.
Section 174. Effective date.

A resolution of the board of commissioners for the unincorporated area of Jones County, Georgia, establishing zoning districts and regulating the uses of land therein; specifying off-street parking and loading requirements; adopting general zoning regulations; adopting a map for the purpose of indicating land districts; describing zoning rules and regulations in said districts; defining said districts; providing for rezoning and redistricting; establishing certain building and zoning regulations in each of the said districts; regulating land uses and accessory uses; prescribing the percentage of land area which may be occupied under varying circumstances; providing for variances, conditional uses, and nonconforming uses; establishing a board of adjustments and appeals; providing for the regulation of subdivision of land; adopting general subdivision regulations; defining certain of the terms used herein; providing penalties for a violation; providing remedies for enforcement hereon; and repealing all conflicting ordinances or resolutions and for other purposes.

ARTICLE I. PURPOSE AND ENACTMENT

The board of commissioners of Jones County, Georgia, under the authority of Article IX, section 2, Paragraph 4 of the Constitution of the State of Georgia, and for the purpose of promoting the health, safety, morals, convenience, order, prosperity, or the general welfare of the unincorporated area of Jones County and to lessen congestion in the streets; to secure safety from fire, panic, and other dangers; to promote health and the general welfare; to provide adequate light and air; to prevent the overcrowding of land, to avoid undue concentration of population; and to facilitate the adequate provision of transportation, water, sewerage, schools, parks, and other public requirements, hereby ordains and enacts into law the official land development resolution for the unincorporated area of Jones County, for planning, zoning and subdivision control purposes and agreed upon through laws enacted by the board of commissioners of Jones County, Georgia.
(Ord. No. 201203-2o, 3-20-2012)

ARTICLE II. SHORT TITLE

This resolution shall be known and may be cited as "The Comprehensive Land Development Resolution for the Unincorporated Area of Jones County, Georgia."
(Ord. No. 201203-2o, 3-20-2012)

ARTICLE III. DEFINITIONS OF TERMS USED IN THIS RESOLUTION

Section 31. General.

Except as otherwise provided herein, all words shall have the customary dictionary meaning. The present tense includes the future tense and the future tense includes the present tense. The singular number includes the plural and the plural includes the singular. The word "person" includes a firm, corporation, association, organization, trust or partnership. The word "lot" includes "plot" or "parcel". The word "building" includes "structure". The word "shall" is

always mandatory. The word "may" is permissive. The word "used" or "occupied" as applied to any land or building shall be construed to include the words "intended, arranged, or designed to be used or occupied." The word "maps" means the official zoning district maps for the unincorporated area of Jones County, Georgia. The words "zone," "zoning district", and "district" have the same meaning. When connecting two or more permissible uses or activities, the word "or" shall be construed to include the word "and."
(Ord. No. 201203-2o, 3-20-2012)

Section 32. Specific definitions.

When used in this resolution, the following words and phrases shall have the meaning given in this section:

(1) *Accessory use:* A use customarily incidental to the principal use of land and located on the same lot with such principal use or structure.

(2) *Alley:* A public way dedicated to and accepted by a governing body, providing a secondary means of access to abutting properties.

(3) *Automobile service station:* Any area of land, including any buildings or structures thereon, that is used to dispense motor vehicle fuels, oils, and accessories at retail, and where repair service is incidental and no storage or parking space is offered for rent.

(4) *Block:* A piece or parcel of land entirely surrounded by public highways or streets, other than alleys.

(5) *Board of commissioners:* The board of commissioners of Jones County, Georgia.

(6) *Boarding house:* A building other than a hotel or motel where, for compensation, lodging is provided for terms of one week or more, for more than two but not more than 20 persons, in more than two rooms that, individually or collectively, do not constitute separate dwelling units.

(7) *Building:* Any structure permanently or temporarily attached to the ground.

(8) *Building, accessory:* A subordinate building, the use of which is incidental to that of the dominant use of the main building or land.

(9) *Building, alterations of:* Any change in the supporting members of a building, such as bearing walls, beams, columns, and girders, except such change may be required for its safety, or any addition to a building, or any change in use resulting from moving a building from one location to another.

(10) *Building, height of:* The vertical distance from the average elevation of the proposed finished grade at the front of the building to the highest point of the roof for flat roofs; to the mean level between the eaves and ridge for gable, hip, and gambrel roofs; and to the deck line for mansard roofs.

(11) *Building line:* The line beyond which the foundation wall or any enclosed or covered porch, vestibule, or other enclosed or covered portion of a building shall not project.

(12) *Building, principal:* The primary building on a lot or a building that houses a principal use.

(13) *Business, retail:* Business establishments that generally sell commodities or services in varying quantities to the general public. These commodities or services are mainly for the use of the purchaser.

(14) *Business, wholesale:* Business establishments that generally sell commodities or services in large quantities or by the piece to retailers, jobbers, other wholesale businesses, or manufacturing establishments. These commodities or services are mainly for use in the fabrication of a product, or for use by a business service.

(15) *Campground:* Any lot upon which are temporarily situated two or more recreational vehicles or tents for a period of less than thirty days.

(16) *Change of occupancy:* A discontinuance of an existing use and substitution of a use of a different kind or class. Change of occupancy does not include a change of tenants or proprietors, unless accompanied by a change in type of use.

(17) *Club:* Buildings and facilities owned or operated by a corporation, association, person, or persons for social, educational, or recreational purposes, but not primarily for profit or to render a service to the general public.

(18) *Clinic:* An establishment where patients, who are not lodged overnight, are admitted for examination and treatment.

(19) *Commission:* The Jones County Planning and Zoning Commission.

(20) *Communication tower:* A structure situated on a site that is intended for transmitting or receiving radio, television, or telephonic communication.

(21) *Condominium:* A form of individual ownership of a unit, combined with joint ownership of common areas of the building and grounds in development as provided for in the Georgia Condominium Act.

(22) *Construction, actual:* The commencement and continuous, uninterrupted prosecution [execution] of construction for the purpose of permanent placement and fastening of materials to the land or structure, for which a permit required pursuant to this resolution has been issued for the same purposes. Construction includes filling, grading, the installation of drainage facilities, and substantial demolition, clearing, excavation, or removal of an existing structure preparatory to new construction, provided that work shall be reasonably continuous until the completion of the new construction.

(23) *Convenience store:* A single story retail store containing less than 2,000 square feet of gross floor area that is designed and stocked to sell primarily food, beverages, and other household supplies to the customers who purchase only relatively few items, in contrast to a "supermarket". It is designed to attract, and depends upon a large volume of stop and go traffic.

(24) *Day care center:* Any place operated by a person, society, agency, corporation, institution, or any other group, wherein are received for pay seven or more children for group care, without transfer or custody, for more than four hours and less than 24 hours per day.

(25) *Day care home:* Any place operated by any person, who receives for pay three to six children under 17 years of age for group care, without transfer of custody, for more than four hours and less than 24 hours per day.

(26) *District:* A section of the unincorporated area of Jones County within which the zoning regulations are uniform.

(27) *Dwelling:* A building designed or used for permanent living quarters for one or more families.

(28) *Dwelling, multifamily:* A building designed for or occupied exclusively by three or more families living independently. Each dwelling unit shall be a minimum of 600 square feet in size. The exterior of the dwelling shall not have metal siding.

(29) *Dwelling, single-family (detached):* A permanently sited building occupied or designed to be occupied exclusively by one family, not including dwellings defined herein as manufactured (mobile) homes or single-family attached dwellings. Each dwelling unit shall be a minimum of 600 square feet in size. The exterior of the dwelling shall not have metal siding.

(30) *Dwelling, single-family attached:* One of a series of two or more single-family dwelling units on separate lots or in condominium ownership, which are joined at one or more points by one or more party walls or other common facilities, not including the walls of an enclosed courtyard or similar area. Each dwelling unit shall be a minimum of 600 square feet in size. The exterior of the dwelling shall not have metal siding.

(31) *Dwelling unit:* A dwelling or portion thereof providing complete living facilities for one family.

(32) *Easement:* A grant by a property owner of the use of land for a specific purpose or purposes by the general public, a corporation, or a certain person or persons.

(33) *Employee:* Any person working in a business establishment, including a proprietor, owner, or partner, whether paid or unpaid.

(34) *Family:* One or more persons occupying a dwelling and living as a single housekeeping unit, as distinguished from persons occupying a boarding house, lodging house, or hotel, as herein defined.

(35) *Flag lot:* A parcel of land having no building site facing a public or private street or streets and having frontage upon any public or private street or streets only for ingress and egress to the building site of said lot. Street frontage must be a minimum of 30 feet. See Figure 1:

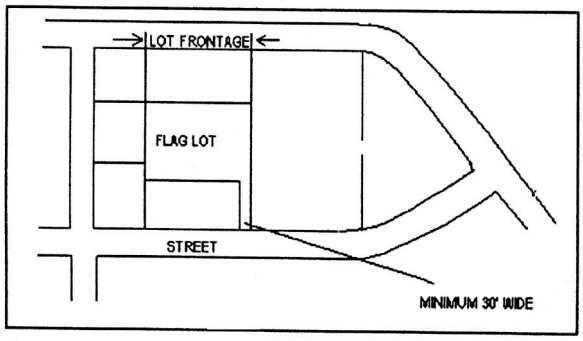

Figure 1

(36) *Frontage, lot:* The distance for which the front boundary line of the lot and the street line are coincident.

(37) *Frontage, street:* All of the property on the side of a street between two intersecting streets (crossing or terminating), or if the street is dead-ended, all of the property abutting on one side between an intersecting street and the dead end of the street.

(38) *Gross floor area:* The total area of a building measured by taking the outside dimensions of the building at each floor level intended for occupancy or storage.

(39) *Home occupation:* An occupation for gain or support conducted only by members of a family residing on the premises.

(40) *Hotel, motel:* A building, or portion thereof, or a group of buildings, which provides sleeping accommodations in six or more separate units or rooms for transients on a daily, weekly, or similar short-term basis. Where such an establishment is permitted as a principal use, all uses customarily accessory thereto for the comfort, accommodation, and entertainment of patrons, including restaurants, but not including bars, taverns, and nightclubs unless specifically permitted, shall be permitted uses.

(41) *Junkyard:* A lot, parcel of land, structure, or part thereof, used primarily for the collection, storage, and sale of wastepaper, rags, scrap metal, or discarded material, or for the collecting, dismantling, storage, and salvaging of machinery or vehicles not in running condition, or for the sale of parts thereof.

(42) *Junked vehicle:* A vehicle not in operating condition which has been parked or stored upon the same lot or parcel for a period of 15 days or more.

(43) *Laundry, commercial:* An establishment with facilities for laundering clothes, linens, and similar items, the facilities of which are not for hire.

(44) *Laundry and dry cleaning pickup:* An establishment providing for the taking and picking up of laundry, but not having equipment for the processing of laundry.

(45) *Laundry, self-service:* A business that provides home-type washing, drying, or ironing machines for hire.

(46) *Lot:* A parcel of land occupied or to be occupied by one or more main buildings and accessory buildings, with such open and parking spaces as are required by the provisions of this resolution, having its frontage upon a public or private road or street.

(47) *Manufactured (mobile) home:* A structure, transportable in one or more sections, which, in the traveling mode, is eight body feet or more in width or 40 body feet or more in length, or, when erected on site, is 320 or more square feet in area, and which is built on a permanent chassis and designed to be used as a dwelling with or without permanent foundation when connected to the required utilities and includes the plumbing, heating, air conditioning, and electrical systems contained herein, or any structure certified as meeting Federal Manufactured Home Construction and Safety Standards pursuant to 42 U.S.C. 5401 et seq.

(48) *Manufactured (mobile) home park:* A lot, plot or parcel of land designed for or which is intended to be used for the accommodation of three or more residential manufactured homes.

(49) *Motel:* See hotel.

(50) *Nonconforming use:* A use of land existing at the time of the enactment or amendment of this resolution, which, by virtue of that enactment or amendment, does not conform with the regulations of the use district in which it is located.

(51) *Nursing home:* A facility maintained for the purpose of providing skilled nursing care and medical supervision at a lower level than that available in a hospital to more than three persons.

(52) *Open space:* A yard area which is not used for or occupied by a driveway, off-street parking lot, loading space, drying yard, or refuse storage space.

(53) *Personal care home:* A building, group of buildings, facility, or place operated by a person, firm, corporation, association, organization, trust, or partnership not legally related to the individuals served, and licensed by the State of Georgia to provide community alternatives in a residential environment to institutional care for individuals in need of such care and providing a residence for such persons. Such facilities provide room, board, personal and physical care, and supervision in a family environment. The term "personal care home" shall include, but shall not be limited to, homes as established under the Georgia "Community Services Act for the Mentally Retarded" (Ga. Laws 1972, page 200), and facilities of similar intention and purpose, but shall not include facilities housing persons convicted of crimes but not housed in penal institutions.

(54) *Personal care home, congregate:* A personal care home which offers care to 16 or more persons.

(55) *Personal care home, family:* A personal care home in a family-type residence, noninstitutional in character, which offers care to two to six persons.

(56) *Personal care home, group:* A personal care home in a residence or other type of building or buildings, noninstitutional in character, which offers care to seven to 15 persons.

(57) *Plat:* A map, plan or layout of a county, city, town, section or subdivision indicating the location and boundaries of properties.

(58) *Private road:* Any road, street, highway or other means of vehicular access, to a parcel of land not maintained by the Georgia Department of Transportation or Jones County (or any other public agency), regardless of ownership.

(59) *Professional:* When used in connection with "use", "office", and "occupancy", a use or occupancy by persons generally engaged in rendering personal, executive, sales or administrative services or activities, including, but not limited to, accountants, architects, engineers, land surveyors, doctors, lawyers, insurance offices, real estate offices, religious organizations, stockbrokers, and administrative agencies considered professional in character. This term does not include repairs or sales of tangible personal property stored or located on the premises or any use which would create any loud noise or noxious odors.

(60) *Recreational vehicle (travel trailer):* A vehicular portable structure designed as a temporary dwelling, containing not more than 320 feet of floor area and not more than eight feet in width.

(61) *Residential child care facility:* An institution, society, agency or facility providing full-time care for children under 17 years of age outside of their own homes, including temporary shelters or other facilities for children and their families or portions thereof. This term shall include "child-caring institutions", as defined in the Georgia Children Youth Act (O.C.G.A. § 49-5-1), but shall not include foster family homes.

(62) *Sign:* Any words, lettering, parts of letters, figures, numerals, phrases, sentences, emblems, devices, designs, trade names or marks, or combinations thereof, by which anything is made known, such as the designation of an individual, a firm, an association, a profession, a business, a commodity or product which are visible from any public way and used as outdoor display.

(63) *Sign, outdoor advertising:* A structural poster panel or painted sign, either freestanding or attached to a building, for the purpose of conveying information, knowledge or ideas about a subject unrelated to the premises upon which it is located.

(64) *Structure:* Anything constructed or erected, the use of which requires a location on the ground, or to be attached to something having a location on the ground.

(65) *Subdivider:* Any person who undertakes the subdivision of land as herein defined.

(66) *Subdivision:* Any division of a tract or parcel of land into two or more lots, building sites or other divisions for the purpose, whether immediate or future, of sale, legacy, or

building development. Subdivision includes any division of land involving a new street or a change in existing streets and includes resubdivision and, where appropriate to the context, relates to the process of subdividing or to the land or area subdivided; provided, however, that the following are not included in this definition:

a. The sale or exchange of parcels of land between separate or common owners of adjoining properties provided that additional lots are not thereby created, and that the lots created are in accordance with the provisions of this resolution.

(67) *Yard:* A space on the same lot with a main building, such space being open, unoccupied and unobstructed by buildings or structures from ground to sky except where encroachments and accessory buildings are expressly permitted.

(68) *Yard, front:* An open, unoccupied space on the same lot with the principal building, extending the full width of the lot and situated between the right-of-way line and the front line of the building projected to the side lines of the lot. The depth of the front yard shall be measured between the front line of the building and the right-of-way line. Covered porches, whether enclosed or unenclosed, shall be considered as part of the main building and shall not project into a required front yard. On corner lots the front yard shall be considered to be parallel to the street upon which the lot has its least dimension.

(69) *Yard, rear:* An open space on the same lot with the main building, such space being unoccupied except by accessory buildings, extending the full width of the lot and situated between the rear line of the lot and the rear line of the main building projected to the side lines of the lot. On all corner lots the rear yard shall be at the opposite end of the lot from the front yard.

(70) *Yard, side:* An open, unoccupied space on the same lot with a main building, situated between the side line of the building and the adjacent side line of the lot extending from the rear line of the front yard to the front line of the rear yard. If no rear yard is required, the rear boundary of the side yard shall be the rear line of the lot. On corner lots, the side yard shall be considered to be parallel to the street upon which the lot has its greatest dimension.

(71) *Zoning enforcement officer:* The person designated by the board of commissioners of Jones County, Georgia, to enforce and administer the provisions of this resolution.

(Ord. No. 201203-2o, 3-20-2012)

ARTICLE IV. ESTABLISHMENT OF DISTRICTS

Section 41. Division of the unincorporated area of the county into districts.

For the purpose of this resolution, the unincorporated area of Jones County, Georgia, is divided into 16 districts as follows:

AG-1 Agricultural/rural district

AG-R Agricultural/residential district

R-R Rural-residential district

R-1 Single-family residential district

R-2 Two-family residential district

R-3 Multifamily residential district

R-MH Manufactured home residential district

R-1-R Single-family rural-residential district

R-1A Single-family residential district

C-1 Neighborhood commercial district

C-2 General commercial district

C-3 Entertainment commercial district

M-1 Wholesale and light industrial district

M-2 General industrial district

PUD Planned unit development district

HD Historic (overlay) district
(Ord. No. 201203-2o, 3-20-2012)

Section 42. Incorporation of the zoning maps.

The sectional atlas property maps bound in one volume entitled "Official Zoning District Maps for the Unincorporated Area of Jones County, Georgia," hereinafter called official zoning maps, with all notations, references and other information shown thereon shall be the official zoning maps and are hereby made a part of this resolution. Said maps are hereby made a public record and shall be kept permanently in the office of the zoning enforcement officer, where the maps will be accessible to the general public.
(Ord. No. 201203-2o, 3-20-2012)

Section 43. Map amendment.

If, in accordance with provisions of this resolution, changes are made in the district boundaries and other information portrayed in the official zoning maps, changes shall be made on the official zoning maps promptly after the amendment has been approved by the board of commissioners, together with a numerical entry on the official zoning maps referring to the application on file which states the date of the official action and the brief description of the nature of the changes. No amendment to this resolution which involves a matter portrayed on the official zoning maps shall become effective until after such change and entry have been made on said maps.
(Ord. No. 201203-2o, 3-20-2012)

Section 44. Rules for determining boundaries.

Where uncertainty exists with respect to the boundaries of any of the aforesaid districts as shown on the official zoning maps, the following rules shall apply:

44.1. Unless otherwise indicated, the district boundaries are indicated as approximately following property lines, land lot lines, centerlines of streets, highways, alleys or railroads, shorelines of streams, reservoirs, or other bodies of water, or civil boundaries, and they shall be construed to follow such lines.

44.2. Where district boundaries are approximately parallel to the centerlines of streets, highways, or railroads, or rights-of-way of the same, or the centerlines of streams, reservoirs, or other bodies of water, or said lines extended, such district boundaries shall be construed as being parallel thereto and at such distance therefrom as indicated on the official zoning maps. If no distance is given, such dimensions shall be determined by the use of the scale shown on the official zoning maps.

44.3. Where a district boundary line appearing on the official zoning maps divides a lot which is single ownership at the time of this enactment, the use classification of a larger portion may be extended to the remainder by the board of commissioners without recourse to amendment procedure.

44.4. Where a public road, street or alley is officially vacated or abandoned, the regulations applicable to the property to which it is reverted shall apply to such vacated or abandoned road, street or alley.

44.5. In case the exact location of a boundary cannot be determined by the foregoing methods, the board of commissioners shall, upon application, determine the location of the boundary.

(Ord. No. 201203-2o, 3-20-2012)

Section 45. Comprehensiveness of zoning districts.

The purpose of this resolution is to place all portions of the unincorporated area of Jones County into zoning districts. Should any area appear either by reference to the maps or by interpretation to be inadvertently or otherwise omitted from a classification district, that area or areas are hereby placed in an R-1 single-family residential district and are subject to all the regulations pertaining thereto until such time as the board of commissioners can determine its proper zoning district classification.

(Ord. No. 201203-2o, 3-20-2012)

ARTICLE V. APPLICATION OF REGULATIONS

Except as hereinafter provided:

Section 51. Use.

No building, structure or land shall hereafter be used or occupied, and no building or part thereof shall be erected, constructed, reconstructed, moved, or structurally altered except in conformity with the regulations herein specified for the district in which it is located.
(Ord. No. 201203-2o, 3-20-2012)

Section 52. Building height and density.

No building or structure shall hereafter be erected or altered to exceed the height or density limitations established for the zoning district in which it is located.

52.1. *Prohibitions.* No building shall hereafter be erected, constructed or altered as to exceed the maximum height, to house a greater number of families than is allowed, or to occupy a greater number of families than is allowed, or to occupy a greater percentage of lot area than that allowed within the zoning district in which it is located, or to in any other manner contravene the provisions of this resolution.

52.2. *Exceptions.* The building height restrictions imposed on buildings and structures by the resolution for each zoning district shall not apply to the following buildings or structures:

52.21. Churches, schools, hospitals, sanitariums, and other public and quasi-public buildings, and public utility structures, provided that the front, rear, and side yards required in the district in which the structure is located be increased one foot for each ten feet that the building or structure exceeds the maximum height permitted in the zoning district.

52.22. Barns, silos, grain elevators, other farm structures, belfries, cupolas, domes, monuments, water towers, transmission towers, windmills, chimneys, cooling towers, smokestacks, flagpoles, radio and television towers, masts, aerials, and similar structures.

52.3. *Signs.* None of the exemptions contained in section 52.2. shall apply to signs of any kind, as defined in this resolution.
(Ord. No. 201203-2o, 3-20-2012)

Section 53. Lots and yards.

Lots and yards and other required open space hereafter shall not be created or reduced in area or dimension to have less than the minimum area or dimensions set forth herein for the zoning district in which they are located.

53.1. *Dimensions and area.* No building or other structure shall hereafter be erected or altered to have smaller or narrower front yards, rear yards, side yards, or other open spaces than herein required.

53.2. *Application of requirements for multiple structures.* No part of a yard or other open space or off-street parking or loading space required about or in connection with any building for the purpose of complying with this resolution shall be included as part of a yard, open space, or off-street parking or loading space similarly required for any other building.

53.3. *Reduction in area or dimension.* No yard or lot existing at the time of passage of this resolution shall be reduced in dimension or area below the minimum requirements set forth herein. Yards or lots created after the effective date of this resolution shall meet at least the minimum requirements established by this resolution, except as may be allowed pursuant to the provisions of section 114.2. This section shall not apply when a portion of a lot is acquired for public use.

53.4. *Projection of buildings into required yards.* Every part of a required yard or open space shall be open from ground to sky unobstructed, except for accessory buildings as provided in section 95 and for the ordinary projection of sills, cornices, buttresses, ornamental features, chimneys, flues, and eaves, provided such projection shall not extend more than two feet beyond the yard area requirements.

(Ord. No. 201203-2o, 3-20-2012)

ARTICLE VI. GENERAL PROVISIONS

Section 61. Nonconforming lots, nonconforming uses of land, nonconforming structures, and nonconforming uses of structures and premises.

Within the zoning districts established by this resolution or amendments that may later be adopted, there may exist lots, structures, and uses of land and structures that were lawful before this resolution was adopted or amended, but which would be prohibited, regulated, or restricted under the terms of this resolution or future amendments.

It is the intent of this resolution to recognize that the elimination of existing buildings, structures, and uses that are not in conformity with the provisions of this resolution is as much a subject of health, safety and general welfare as is the prevention of the establishment of new uses that would violate the provisions of this resolution. It is also the intent of this resolution to administer the elimination of nonconforming uses, buildings and structures so as to avoid any unreasonable invasion of established private property rights.

Therefore, any structure or use of land existing at the time of the enactment or amendment of this resolution, and amendments thereto, but not in conformity with its use regulations by virtue of that enactment or amendment, may be continued subject to the following provisions:

61.1. *Incompatibility of nonconforming uses.* Nonconforming uses are declared by this resolution to be incompatible with permitted uses in the districts in which such a use is located. A nonconforming use shall not be extended or enlarged after adoption of

these regulations either by the attachment on a building or premises of additional signs, as defined in this resolution, or by the addition of other uses of a nature which would be prohibited generally in the district involved.

61.2. *Avoidance of undue hardship.* Nothing in this resolution shall be deemed to require a change in the plans, construction, or designated use of any building on which actual construction was lawfully begun before the effective date of amendment or adoption of this resolution.

61.3. *Single nonconforming lots of record.* A single lot of record which does not meet the requirements for area or width, or both, of this resolution may be used or sold to be used for the erection of those buildings and accessory structures necessary to carry out the allowed uses in that district, provided that:

61.31. Yard requirements and maximum lot coverage requirements for the lot shall conform to the regulations for the zoning district in which the lot is located, or a variance from these requirements shall be obtained pursuant to section 114.2 of this resolution.

61.32. Locational requirements governing accessory buildings and uses contained in section 93 of this resolution shall be met.

61.33. Parking requirements as provided in section 62 of this resolution shall be met.

61.4. *Nonconforming lots of record in combination.* If an undeveloped nonconforming lot of record adjoins and has continuous frontage with one or more other undeveloped lots under the same ownership at the time that the adoption or amendment of this resolution caused such lot to become nonconforming, then neither the owner of the nonconforming lot nor his successors in interest may take advantage of these provisions. A lot is undeveloped if it has no substantial structures upon it. This section shall not apply to a nonconforming lot if a majority of the lots on either side of the street or streets where such lot is located and within 500 feet of such lot are also nonconforming.

61.5. *Nonconforming uses of land.* Where, on the effective date of adoption or amendment of this resolution, lawful uses of land exist which would not be permitted by the requirements imposed by this resolution, said uses may be continued so long as they remain otherwise lawful, provided:

61.51. No such nonconforming use shall be enlarged or increased, nor extended to occupy a greater area of land than was occupied at the effective date of adoption or amendment of this resolution;

61.52. No such nonconforming uses shall be moved in whole or in part to any portion of the lot or parcel other than that occupied by such uses at the effective date of adoption or amendment of this resolution;

61.53. If any such nonconforming uses are discontinued for a period of more than 60 days, any subsequent use of such land shall conform to the requirements specified in this resolution for the district in which such land is located;

61.54. No additional structures not conforming to the requirements of this resolution shall be erected in connection with such nonconforming use of land.

61.6. *Nonconforming structures.* Where a lawful structure exists at the effective date of adoption or amendment of this resolution that could not be built under the requirements of this resolution by reason of restrictions on area, lot coverage, height, yards, location on the lot, bulk or other requirements concerning the structure, such structure may be maintained so long as it remains otherwise lawful, subject to the following provisions:

61.61. No such nonconforming structure shall be enlarged or altered in a way that increases its nonconformity, but any structure or portion thereof may be altered to decrease its nonconformity. No such alterations or enlargement shall in itself be nonconforming.

61.62. Should such nonconforming structure or nonconforming portion of structure be destroyed by any means to the extent of more than 50 percent of its current market value, it shall not be reconstructed except in conformance with the requirements of this resolution.

61.63. Should such structure be voluntarily moved for any reason for any distance, it shall thereafter conform to the requirements of this resolution for the district in which it is located.

61.64. This section shall not be construed to prohibit the replacement, addition to or improvement of a nonconforming manufactured or mobile home, provided that any replacement home meets all federal, state, and local requirements, or said addition or improvement shall cause the house to more closely resemble a site-built structure, thus decreasing the appearance of nonconformity. Any replacement of a nonconforming manufactured or mobile home must be completed within 60 days of the removal of the nonconforming manufactured or mobile home.

61.7. *Nonconforming uses of structures or structures and premises in combination.* If a lawful use involving individual structures, or a structure and premises in combination, exists at the effective date of adoption or amendment of this resolution, and that use would not be allowed in the district under the terms of this resolution, the lawful use may be continued so long as it remains otherwise lawful, subject to the following provisions:

61.71. No existing structure devoted to a use not permitted by this resolution in the district in which it is located shall be enlarged, extended, constructed, reconstructed, voluntarily moved or structurally altered except in changing the use of the structure to a use permitted in the district in which it is located;

61.72. Any structure, or structure and land in combination, in or on which a nonconforming use is replaced with a conforming use may not later revert to a nonconforming use;

61.73. Any nonconforming use may be extended throughout any part of a building which was manifestly arranged or designed for such use at the time such use became nonconforming, but no such use shall be extended to any land outside such building.

(Ord. No. 201203-2o, 3-20-2012)

Section 62. Off-street automobile parking.

Off-street automobile storage or parking space shall be provided on every lot on which any permitted or conditional use is established in accordance with this resolution.

62.1. *General requirements.* For the purpose of this resolution, the following general requirements are specified:

62.11. The term "off-street parking space" shall mean a space at least nine feet wide and 20 feet in length, except that in parking areas containing ten or more parking spaces, no more than 20 percent of the parking spaces may be at least seven and one-half feet wide and 15 feet in length. These smaller spaces shall be prominently designated as reserved for small or compact cars. In addition, sufficient area for egress and ingress and maneuverability of vehicles must be provided.

62.12. If an off-street parking space cannot be reasonably provided on the same lot on which the principal use is conducted, the board of appeals and adjustments may permit such space to be provided on other off-street property, provided such space lies within 600 feet of the property line of such principal use. Such vehicle parking space shall be associated with the permitted use and shall not thereafter be reduced or encroached upon in any manner.

62.13. The required number of parking spaces for any number of separate uses may be combined in one lot, but the required space for one use may not be assigned to another use at the same time, except that a portion of the parking space required for an existing church whose peak attendance will be at night or on Sundays may be assigned to a use which will be closed at nights or on Sundays.

62.14. Area reserved for off-street parking in accordance with the requirements of this resolution shall not be reduced in area or changed to any other use unless the permitted use which it serves is discontinued or modified, except where equivalent parking space is provided and approved by the board of appeals and adjustments.

62.15. Off-street parking existing at the effective date of this resolution in connection with the operation of an existing building or use shall not be reduced to an amount less than hereinafter required for a similar new building or use.

62.2. *Parking space requirements for all districts.* Off-street automobile storage or parking space shall be provided with vehicular access to a street or alley, and shall be equal to at least the minimum requirements for the specific land use set forth.

Land Use	*Parking Requirements*
TABLE 1	
Dwellings	
1) Single-, two-, and multifamily dwellings (including manufactured homes on individual lots)	Two spaces for each dwelling unit, except for efficiency units, which require one space for each dwelling unit and one-bedroom units, which require one and one-half spaces for each dwelling unit.
2) Hotels, motels, tourist courts and homes, and campgrounds	One space for each room, guest bedroom, or recreational vehicle or tent space, plus one space for each five nonresident employees, plus one space for a resident manager or owner, plus additional space as required herein for accessory restaurants or other facilities.
3) Manufactured (mobile) home parks	Two spaces for each manufactured home space to be rented out, plus two spaces for the residence of a manager or owner.
4) Boarding houses and dormitories	One space for each bedroom.
TABLE 2	
Public Assembly	
1) Churches and other places of worship	One space for each four seats in the main auditorium or sanctuary.
2) Private clubs, lodges, and fraternal buildings not providing overnight accommodations	One space for each 300 square feet of gross floor area.
3) Theaters, auditoriums, coliseums, stadiums and similar places of assembly	One space for each four seats.
4) Libraries, museums	One space for each 500 square feet of gross floor area.
5) Schools, including kindergartens, playschools and day care centers	One space for each four seats in assembly halls, or one space for each employee, including teachers and administrators, whichever is greater, plus five spaces per classroom for high schools and colleges.
6) Skating rinks, dance halls, exhibition halls, pool rooms and other places of amusement or assembly without fixed seating arrangements	One space for each 200 square feet of floor area.
7) Bowling alleys	Four spaces for each alley.
8) Athletic fields, golf courses, tennis courts, swimming pools and similar recreational facilities and accessory uses	One space for each 200 square feet of gross floor area within enclosed buildings, plus one space for every three persons that the outdoor facilities are designated to accommodate when used to the maximum capacity.

Land Use	*Parking Requirements*
TABLE 3	
Health Facilities and Institutions	
1) Hospitals, clinics, and other similar medical (including mental health) treatment facilities in excess of 10,000 square feet of floor area	Two spaces for each bed or one space for each 150 square feet of gross floor area, whichever is greater.
2) Nursing homes, homes for the aged, and similar institutional uses	Three spaces for every five beds.
3) Penal and correctional facilities and institutions in which mentally ill persons are confined	One space for every two employees on maximum shift.
4) Kennels and animal hospitals	A parking area equal to 30 percent of the total enclosed or covered area.
5) Medical, dental, and health offices and clinics with less than 10,000 square feet of floor area	One space for each 200 square feet of floor area.
6) Mortuaries and funeral homes	Five spaces for each parlor or chapel unit or one space for every four seats, whichever is greater.
TABLE 4	
Businesses	
1) Automobile repair establishments not including automobile service stations	One space for each regular employee plus one space for each 250 feet of gross floor area.
2) Food stores and convenience stores	One space for each 100 square feet of floor area designated for retail sales only.
3) Restaurants, bars, grills, diners, cafes, taverns, nightclubs, lunch counters and all similar dining and/or drinking establishments	One space for each four seats provided for patron use plus one space for each 75 square feet of floor space provided for patron use but not containing seats.
4) Office buildings, including banks, business, commercial, governmental and professional offices and buildings, but excluding medical and dental health offices and clinics	One space for each 300 square feet of ground floor area, plus one space for each 500 square feet of upper floor space, plus one space for each company vehicle operating from the premises.
5) General business, commercial, or personal service establishments catering to the retail trade but excluding food stores	One space for each 200 square feet of floor area designated for retail sales only.
6) Shopping centers	Five and one-half spaces for each 1,000 square feet of gross floor area.
7) Furniture stores	One space for each 1,000 square feet of gross floor area.

Land Use	*Parking Requirements*
8) Public utilities, such as telephone exchanges and substations, radio and TV stations, and electric power and gas substations	Parking area equal to 25 percent of gross floor area.
9) Automobile service stations	Two spaces plus one additional space for each lubrication, service, or wash bay.
TABLE 5	
Industries	
1) Commercial, manufacturing and industrial establishments not catering to the retail trade	One space for each three employees on the maximum working shift, plus one space for each company vehicle operating from the premises.
2) Wholesale establishments	One space for every 50 square feet of customer service area, plus two spaces for each three employees on the maximum work shift, plus one space for each company vehicle operating from the premises.

62.3. *Site requirements.* All off-street parking, except that for one- and two-family dwellings, shall be laid out, constructed, and maintained in accordance with the following requirements:

62.31. All such parking areas shall be hard surfaces with concrete or plant bituminous material and shall be maintained in a dustproof condition, and a good stand of grass or other common landscaping material shall be maintained on the remainder of the lot.

62.32. Lighting facilities shall be so arranged that light is reflected away from adjacent properties.

62.33. The parking lot shall be adequately drained.

62.34. Along those lot lines of the parking area which abut residential districts, a dense planting of trees and shrubs shall be established on a strip of land not less than eight feet in width adjacent to the districts and provided that such planting be not less than six feet in height and a substantial bumper rail of wood, metal or concrete shall be installed on the inside of the planting strip.

62.35. A raised curb of at least six inches shall be erected along all of the property lines, except for driveway openings, and those lot lines abutting residential districts where the requirements in section 62.34 shall prevail.

62.36. No sign, whether permanent or temporary, shall be placed within the public right-of-way. Signs and planting strips shall be arranged so that they do not obstruct visibility for drivers or pedestrians.

62.37. No off-street parking space or driveway shall be constructed so as to require the backing of vehicles into the right-of-way of a public street.

(Ord. No. 201203-2o, 3-20-2012)

Section 63. Off-street loading and unloading space.

Off-street loading and unloading spaces shall be provided as hereinafter required by this resolution.

63.1. *Size of off-street loading spaces.* Each off-street loading space shall have minimum dimensions of 14 feet in height, 12 feet in width, and 55 feet in length. However, upon sufficient demonstration that a particular loading space will be used exclusively by shorter trucks, the board of appeals and adjustments may reduce the minimum length accordingly to as little as 35 feet.

63.2. *Connection to street or alley.* Each required off-street loading space shall have direct access to a street or alley or have a driveway which offers satisfactory ingress and egress for trucks.

63.3. *Required loading space.* There shall be provided for each hospital, institution, commercial, or industrial building or similar use requiring the receipt or distribution of materials or merchandise at least one off-street loading space for each 10,000 square feet of gross floor area or fraction thereof. Establishments with less than 10,000 square feet of gross floor area may share one or more off-street loading spaces with adjacent establishments, provided that the ratio of loading spaces to gross floor area in such adjacent establishments fulfills the requirements for a single establishment contained herein. Such space shall be so located as to not hinder the movement of pedestrians and vehicles over sidewalk, street, and alley.

63.4. *Bus and trucking terminals.* There shall be provided sufficient space to accommodate the maximum number of buses or trucks to be stored or to be loaded at the terminal at any one time.

63.5. *Location of off-street loading spaces.* All required off-street loading spaces shall be located on the same lot as the building which they are intended to serve, or on an adjacent lot when shared with the use occupying said adjacent lot.

63.6. *Permanent reservation.* Area reserved for off-street loading in accordance with the requirements of this resolution shall not be reduced in area or changed to any other use unless the permitted use which is served is discontinued or modified, except where equivalent loading space is provided and approved by the board of zoning appeals.

(Ord. No. 201203-2o, 3-20-2012)

Section 64. Control of curb cuts and vision clearance.

The requirements for controlling curb cuts and maintaining vision clearance shall be as follows:

64.1. *Curb cuts.* No curb cut shall exceed 50 feet in length, nor shall curb cuts be closer than 20 feet to other curb cuts or closer than 20 feet to an intersection of two streets measured along the curb line.

64.2. *Vision clearance.* In all use districts no fence, wall, shrubbery, sign, marquee or other obstruction to vision between the heights of two and one-half and ten feet from the street level shall be permitted within 20 feet of the intersection of the right-of-way lines of two streets or railroad lines, or of a street with a railroad line.

(Ord. No. 201203-2o, 3-20-2012)

Section 65. Classification of streets.

All streets in the unincorporated area of Jones County are hereby divided into seven classes as shown on the official street map (major thoroughfare plan) adopted by the board of commissioners and on record in the office of the zoning enforcement officer.

65.1. Freeways are those streets which are used primarily for fast or heavy through traffic, and which are divided with full control of access and with no crossings at grade.

65.2. Expressways are those highways or streets which are used primarily for fast or heavy through traffic, and which are divided with full or partial control of access and generally with grade separation at intersections.

65.3. Arterial streets and highways are those which are used primarily for fast or heavy through traffic.

65.4. Collector streets are those which carry traffic from minor streets to the major systems of freeways, expressways, and arterial streets and highways.

65.5. Minor or local residential streets, including cul-de-sacs, are those which are used primarily for access to the abutting properties.

65.6. Minor or local commercial and industrial streets are those which are used primarily for access to the abutting commercial and industrial properties.

65.7. Alleys are those which are used primarily for vehicular service access to the rear or side of properties otherwise abutting on a street.

65.8. Marginal access streets or frontage roads are minor streets which are parallel and adjacent to freeways, expressways, or arterial streets and highways, and which provide access to abutting properties and protection from through traffic.

(Ord. No. 201203-2o, 3-20-2012)

Section 66. Storage and parking of trailers and vehicles.

Commercial vehicles and trailers of all types, including travel, boat, camping, and hauling trailers, shall not be parked or stored on any lot occupied by a dwelling or on any lot in any residential district except in accordance with the following requirements:

66.1. No more than one commercial vehicle per dwelling shall be permitted, and in no case shall a commercial vehicle used for hauling explosives, gasoline, liquefied petroleum products, or other hazardous materials, or of a size in excess of 10,000 pounds gross vehicle weight be permitted.

66.2. Travel trailers, hauling trailers, or boat trailers shall be permitted if parked or stored behind the front yard building line.

66.3. A recreational vehicle shall not be occupied either temporarily or permanently while it is parked or stored in any area except in a campground authorized under this resolution.

66.4. A junked vehicle, as defined in this resolution, shall not be permitted to be located in any residential district. The cost of moving a junked vehicle shall be at the owner's expense.

(Ord. No. 201203-2o, 3-20-2012)

Section 67. Screening and lighting.

67.1. In any residential, commercial or industrial districts, any operation not conducted within a building, such as drive-in businesses, outdoor recreation, outdoor storage of materials, and outdoor servicing activities, and any public utility equipment, such as electrical or gas substations, not contained within a structure or building, shall be enclosed by a wall or fence of solid appearance or a tight evergreen hedge not less than six feet in height where necessary to conceal such areas or facilities from the remainder of that residential district or a residential district adjoining or facing across a street, in the rear, or on the side of the principal building or use.

67.2. In any district where reference is made requiring adequate screening of a specified operation, such screening shall be a wall or fence of solid appearance or a tight evergreen hedge not less than six feet in height.

67.3. Outdoor lighting of all types shall be directed so as to reflect away from all residential dwellings, and shall be so situated so as to not reflect directly into any public rights-of-way.

(Ord. No. 201203-2o, 3-20-2012)

Section 68. Minimum distance between buildings.

The following minimum distance between buildings shall be required unless otherwise specified within this resolution:

68.1. The minimum distance between main buildings located on the same lot or parcel shall be:

68.11. Front-to-front arrangement	40 feet
68.12. Front-to-rear arrangement	50 feet
68.13. Rear-to-rear arrangement	30 feet
68.14. Side-to-side arrangement	20 feet
68.15. All other combinations	20 feet

(Ord. No. 201203-2o, 3-20-2012)

ARTICLE VII. USE REQUIREMENTS BY DISTRICT

Section 71. AG-1 agricultural/rural district.

The purpose of this district is to preserve the rural character of much of Jones County, to protect against the adverse effects of premature development, to encourage the development of rural areas in a coordinated and orderly manner, and to ensure that such development as occurs in these areas is compatible with the predominantly rural and open space character of this district.

71.1. *Permitted uses.* The following uses are permitted within an AG-1 district:

(1) Agriculture, forestry, livestock and poultry production, provided that the operation is conducted on a tract of land not less than two acres in area, and that no structure containing poultry or livestock and no storage of manure, or odor or dust producing substances or uses shall be located within 200 feet of a property line, provided, however, any such structure existing at the time of passage of this resolution shall be allowed to extend to the existing building line but no nearer the property line than any existing portion of such structure. All animals, except those generally recognized as pets, shall be kept in a structure, pen or corral. For residential developments demonstrating green space preservation, a reduced setback of 100 feet from interior lot lines within the common development can be used for structures containing livestock, provided that the net density for the development does not exceed one-tenth unit/acre; the 200-foot setback will remain for the exterior boundary of the project, so as to protect adjacent landowners outside the common development, and a minimum of 25 percent of the total area within the development must remain undeveloped and designated as common areas.

(2) Single-family dwellings.

(3) Type A manufactured homes, as defined in section 91.1, on individual lots, subject to the requirements of section 91.3.

(4) Tenant dwellings for farm workers when located on the same lot or tract as a principal residence, provided that the lot exceeds the minimum lot area required for the principal residence by not less than five acres for each tenant dwelling unit and that all yard requirements in an AG-1 district are satisfied.

(5) Home swimming pool, provided the location is not closer than ten feet to any property line and the pool area is completely enclosed by a wall or fence not less than four feet in height.

(6) Home occupations, provided the requirements of section 95 are met.

(7) Temporary stand for the sale of agricultural products grown or raised by the seller, provided that such stand is set back 25 feet from the street or highway right-of-way line and provided that customers are not served from the street or highway right-of-way.

(8) Accessory buildings, structures, and uses customarily incidental to any use allowed as a permitted or conditional use and located on the same lot as the principal structure or use, provided the requirements of section 93 are met.

(9) Borrow pits, subject to the following conditions:

(a) The borrow pit will provide soil only for a Federal, State, and/or a Jones County funded road construction project that is located entirely within Jones County.

(b) The borrow pit may not result in the creation of a pond or depression in the ground.

(c) No area may have a finished slope that is steeper than 1:2.

(d) Upon completion, the site must be final stabilized with 95 percent vegetation.

(e) All operations must be completed within 24 months. Any extension of operations beyond 24 months will be considered a conditional use.

71.2. *Conditional uses.* The following uses may be allowed as conditional uses within an AG-1 district:

(1) Churches and other places of worship with attendant educational and recreational buildings, provided such use abuts a collector or arterial street, and provided that such buildings be placed not less than 50 feet from any property line.

(2) Kindergartens, playschools, and day care centers and homes.

(3) Public or private schools and libraries, excluding businesses or trade schools.

(4) Clinics and convalescent and nursing homes.

(5) Cemeteries, mausoleums, and crematories, provided that the requirements of section 98 are met.

(6) Public utility structures and buildings, including radio and television transmission stations, provided the installation is properly screened from surrounding uses as required in section 67. No office shall be permitted, and no equipment shall be stored on the site.

(7) Airplane landing fields including flight strips and helicopter ports and accessory buildings.

(8) Publicly or privately owned and operated golf, swimming, tennis, or country clubs, community clubs or associations, fishing or hunting clubs, athletic fields, parks, and other similar recreation areas, provided that no building for such purposes is located within 100 feet of any property line.

(9) Campgrounds, provided the requirements of section 98 are met.

(10) Sawmills and planing mills used for removing and processing timber on adjacent areas, provided that no mill shall be located less than 200 feet from any property line.

(11) Home swimming pool without a fence.

(12) Reserved.

(13) Reserved.

(14) Commercial greenhouses, plant nurseries, and garden and agricultural supply stores.

(15) Public uses and buildings.

(16) Self-service car washes with no more than four bays.

(17) Temporary uses, including the sale of Christmas trees, carnivals, bazaars, the sale of seasonal fruits and vegetables not grown or raised by the seller, and tent revivals.

(18) Transient labor camps or dormitories, subject to dimensional requirements of the R-3 multifamily residential district.

(19) Lodging and boarding houses.

(20) Veterinary hospitals, provided that any structure or outside area used for such purpose shall be no closer than 100 feet from any residential district.

(21) Communication towers, provided the requirements of section 98.5 are met.

(22) Type B manufactured homes, as defined in section 91.1, on individual lots, subject to the requirements of section 91.3, and Type C manufactured homes if relocating within the county.

(23) Accessory dwelling units, provided that the requirements of section 94.3 are met.

71.3. *AG-R agricultural/residential district.* The purpose of this district is to encourage the orderly development of and protect predominantly single-family rural-residential areas, to encourage the preservation of green space, to protect sensitive areas, and to ensure that such development as occurs in these areas, including governmental, educational, religious, and recreational facilities allowed as conditional uses, is compatible with the predominantly single-family rural-residential character of this district.

71.31. *Permitted uses.* The following uses are permitted within an AG-R district:

(1) Single-family dwellings, provided that the dwelling conforms to the following design standards: 1,200 square footage minimum for a single-story home and 2,000 square footage minimum for a multiple story home. Roof pitch must be at least a seven to 12 [slope] for a minimum 75 percent of the total roof area with no part of the roof less than a three to 12 slope. Vinyl and metal siding is not allowed. The home must be enclosed under all exterior walls by a continuous masonry wall, with no openings in said wall, except for required ventilation and access. A variance from the requirements of this provision may be obtained pursuant to section 116 for buildings in areas of historical significance.

(2) Accessory buildings and uses customarily incidental to any use allowed as a permitted or conditional use and located on the same lot as the principal structure or use provided the requirements of section 93 are met.

(3) Home swimming pool, provided the location is not closer than ten feet to any property line and the pool is enclosed by a wall or fence at least four feet in height.

(4) Horses may be kept on a lot provided two and five-tenths acres are provided per horse and any structures housing the horses are located at least 100 feet from any property line within the same zoning district and at least 200 feet from any property line of land of a zoning district other than AG-R. All animals except those generally recognized as pets, shall be kept in a structure, pen or corral.

(5) Home occupations, provided the requirements of section 95 are met.

(6) Gardening on land of one acre or less, when not otherwise existing as an accessory use. No zoning compliance permit is required for this use.

(7) Subdivisions in the AG-R district are required to set aside at least 51 percent of the total project area as green space. The purpose of the green space is to protect sensitive environmental areas such as floodplains and wetlands, and also to provide passive recreation uses for the residents of the development. Ownership of the green space will be retained by the homeowners' association or will be deeded to a land trust or similar body to protect the area. The land will not be dedicated to the county.

71.4.[71.32.] *Conditional uses.* The following uses may be allowed as conditional uses within an AG-R district:

(1) Churches and other places of worship, with attendant educational and recreational buildings, provided such use abuts a collector or arterial street and provided such buildings shall be placed not closer than 50 feet from any property line.

(2) Day care homes.

(3) Public and private schools, colleges, and libraries, excluding business or trade schools.

(4) Public utility structures and buildings, provided that the installation is properly screened as required in section 67 and serves the surrounding area. No office shall be permitted, and no equipment shall be stored on site.

(5) Publicly or privately owned and operated golf, swimming, tennis, or country clubs, community clubs or associations, athletic fields, parks, designated hunting areas for use by similar type of associations, and similar recreation areas, provided that no buildings for such proposed uses are located within 100 feet of any property line.

(6) Cemeteries, mausoleums, and crematories, provided the requirements of section 98 are met.

(7) Other public buildings and uses.

(8) Family personal care homes.

(9) Accessory dwelling units, provided that the requirements of section 94.3 are met.

(Ord. No. 201203-2o, 3-20-2012; Ord. of 7-2-2013; Ord. of 9-4-2014)

Section 72. Residential districts.

This section contains use requirements for residential zoning districts within Jones County.

72.1. *R-R rural residential district.* The purpose of this district is to encourage the orderly development of and protect predominantly residential areas which retain a rural character, to protect against traffic congestion and hazards resulting from overly intense development, and to ensure that such development as occurs in these areas is compatible with the predominantly rural and large-lot residential character of this district.

72.11. *Permitted uses.* The following uses are permitted within an R-R district:

(1) Single-family dwellings, provided that the home is enclosed under all exterior walls by a continuous masonry wall, with no openings in said wall, except for required ventilation and access. A variance from the requirements of this provision may be obtained pursuant to section 116 for buildings in areas of historical significance.

(2) Type A manufactured homes, as defined in section 91.1, on individual lots, provided that the home is enclosed under all exterior walls by a continuous masonry wall, or other type of wall as approved by the board of commissioners, unpierced except for required ventilation and access, and that all provisions of sections 91.34 and 91.35 are met.

(3) Agriculture, forestry, livestock, and poultry production, provided that the operation is conducted on a tract of land not less than five acres in area, and that no structure containing poultry or livestock and no storage of manure or odor or dust producing substance or use shall be located within 200 feet of a property line, provided, however, any such structure existing at the time of passage of this resolution shall be allowed to extend to the existing building line but no nearer the property line than any existing portion of such structure. All animals except those generally recognized as pets, shall be kept in a structure, pen, or corral.

(4) Gardening on land of one acre or less, when not otherwise existing as an accessory use. No zoning compliance permit is required for this use.

(5) Home swimming pool, provided the location is not closer than ten feet to any property line and the pool is enclosed by a wall or fence not less than four feet in height.

(6) Home occupations, provided the requirements of section 95 are met.

(7) Accessory buildings, structures, and uses customarily incidental to any use allowed as a permitted or conditional use and located on the same lot as the principal structure or use, provided the requirements of section 93 are met.

(8) Temporary stand for the sale of agricultural produce grown or raised by the seller, provided that such stand is set back 25 feet from the street or highway right-of-way line, and provided that customers are not served from the street or highway right-of-way.

(9) Borrow pits, subject to the following conditions:

(a) The borrow pit will provide soil only for a Federal, State, and/or a Jones County funded road construction project that is located entirely within Jones County.

(b) The borrow pit may not result in the creation of a pond or depression in the ground.

(c) No area may have a finished slope that is steeper than 1:2.

(d) Upon completion, the site must be final stabilized with 95 percent vegetation.

(e) All operations must be completed within 24 months. Any extension of operations beyond 24 months will be considered a conditional use.

(10) Concrete plants, subject to the following conditions:

(a) The concrete plant will provide concrete only for a Federal, State, and/or a Jones County funded road construction project that is located entirely within Jones County;

(b) Upon completion, the site must be final stabilized with 95 percent vegetation;

(c) All operations must be completed within 24 months. Any extension of operations beyond 24 months will be considered a conditional use.

72.12. *Conditional uses.* The following uses may be allowed as conditional uses within an R-R district:

(1) Churches and other places of worship, with attendant educational and recreational buildings, provided such use abuts a collector or arterial street and provided such buildings shall be placed not closer than 50 feet from any property line.

(2) Day care homes.

(3) Public and private schools, colleges, and libraries, excluding business or trade schools.

(4) Public utility structures and buildings, provided that the installation is properly screened as required in section 67 and serves the surrounding area. No office shall be permitted, and no equipment shall be stored on the site.

(5) Publicly or privately owned and operated golf, swimming, tennis, or country clubs, community clubs or associations, athletic fields, parks, and similar recreation areas, provided that no buildings for such proposed uses are located within 100 feet of any property lines.

(6) Cemeteries, mausoleums, and crematories, provided the requirements of section 98 are met.

(7) Other public buildings and uses.

(8) Family personal care homes.

(9) Home swimming pool without a fence.

(10) Communication towers, provided the requirements of section 98.5 are met.

(11) Commercial greenhouses and plant nurseries.

(12) Accessory dwelling units, provided that the requirements of section 94.3 are met.

72.2. *R-1 single-family residential district.* The purpose of this district is to encourage the orderly development of and protect predominantly single-family residential areas, and to ensure that such development as occurs in these areas, including governmental, educational, religious, and recreational facilities allowed as conditional uses, is compatible with the predominantly single-family residential character of this district.

72.21. *Permitted uses.* The following uses are permitted within an R-1 district:

(1) Single-family dwellings, provided that the home is enclosed under all exterior walls by a continuous masonry wall, with no openings in said wall, except for required ventilation and access. A variance from the requirements of this provision may be obtained pursuant to section 116 for buildings in areas of historical significance.

(2) Accessory buildings and uses customarily incidental to any use allowed as a permitted or conditional use and located on the same lot as the principal structure or use provided the requirements of section 93 are met.

(3) Home swimming pool, provided the location is not closer than ten feet to any property line and the pool is enclosed by a wall or fence at least four feet in height.

(4) Agriculture, forestry, livestock and poultry production, provided that the operation is conducted on a tract of land not less than ten acres in area, and that no storage of manure or odor or dust producing substance or use shall be located within 200 feet of a property line, provided, however, any structure existing at the time of passage of this resolution shall be allowed

to extend to the existing building line but no nearer the property line than any existing portion of such structure. All animals except those generally recognized as pets, shall be kept in a structure, pen or corral.

(5) Home occupations, provided the requirements of section 95 are met.

(6) Gardening on land of one acre or less, when not otherwise existing as an accessory use. No zoning compliance permit is required for this use.

(7) Borrow pits, subject to the following conditions:

(a) The borrow pit will provide soil only for a Federal, State, and/or a Jones County funded road construction project that is located entirely within Jones County.

(b) The borrow pit may not result in the creation of a pond or depression in the ground.

(c) No area may have a finished slope that is steeper than 1:2.

(d) Upon completion, the site must be final stabilized with 95% vegetation.

(e) All operations must be completed within 24 months. Any extension of operations beyond 24 months will be considered a conditional use.

72.22. *Conditional uses.* The following uses may be allowed as conditional uses within an R-1 district:

(1) Churches and other places of worship, with attendant educational and recreational buildings, provided such use abuts a collector or arterial street, and provided such buildings shall be placed not closer than 50 feet from any property line.

(2) Day care homes.

(3) Public and private schools, colleges, and libraries, excluding business or trade schools.

(4) Public utility structures and buildings, provided that the installation is properly screened as required in section 67 and serves the surrounding area. No office shall be permitted, and no equipment shall be stored on site.

(5) Publicly or privately owned and operated golf, swimming, tennis, or country clubs, community clubs or associations, athletic fields, parks, and similar recreation areas, provided that no buildings for such proposed uses are located within 100 feet of any property line.

(6) Cemeteries, mausoleums, and crematories, provided the requirements of section 98 are met.

(7) Other public buildings and uses.

(8) Family personal care homes.

(9) Accessory dwelling units, provided that the requirements of section 94.3 are met.

72.3. *R-2 two-family residential district.* The purpose of this district is to encourage the orderly development of and protect residential areas containing a mixture of one- and two-family dwellings, and to ensure that such development as occurs in these areas,

including governmental, educational, religious, and recreational facilities allowed as conditional uses, is compatible with the one- and two-family residential character of this district.

72.31. *Permitted uses.* The following uses are permitted within an R-2 district:

(1) Single-family dwellings.

(2) Single-family attached dwellings.

(3) Two-family dwellings (duplexes).

(4) Home swimming pool, provided the location is not closer than ten feet to any property line and the pool is enclosed by a wall or fence not less than four feet in height.

(5) Agriculture, forestry, livestock and poultry production, provided that the operation is conducted on a tract of land not less than ten acres in area, and that no storage of manure or odor or dust producing substance or use shall be located within 200 feet of a property line, provided, however, any such structure existing at the time of passage of this resolution shall be allowed to extend to the existing building line but no nearer the property line than any existing portion of such structure. All animals except those generally recognized as pets, shall be kept in a structure, pen or corral.

(6) Accessory buildings and uses customarily incidental to any use allowed as a permitted or conditional use and located on the same lot as the principal structure or use, provided the requirements of section 93 are met.

(7) Home occupations, provided the requirements of section 95 are met.

(8) Gardening on land of one acre or less, when not otherwise existing as an accessory use. No zoning compliance permit is required for this use.

72.32. *Conditional uses.* The following uses may be allowed as conditional uses within an R-2 district:

(1) Churches and other places of worship, with attendant educational and recreational buildings, provided such use abuts a collector or arterial street, and provided such buildings shall be placed not closer than 50 feet from any property line.

(2) Day care homes.

(3) Public and private schools, colleges, and libraries, excluding business or trade schools.

(4) Public utility structures and buildings, provided that the installation is properly screened as required in section 67 and serves the surrounding area. No office shall be permitted, and no equipment shall be stored on site.

(5) Publicly or privately owned and operated golf, swimming, tennis, or country clubs, community clubs or associations, athletic fields, parks, and similar recreation areas, provided that no buildings for such proposed uses are located within 100 feet of any property line.

(6) Cemeteries, mausoleums, crematories, provided the requirements of section 98 are met.

(7) Other public buildings and uses.

(8) Family personal care homes.

72.4. *R-3 multifamily residential district.* The purpose of this district is to encourage the orderly development of and protect residential areas containing multifamily and higher density one- and two-family residences, and to ensure that such development as occurs in these areas, including office, governmental, educational, religious, and recreational facilities allowed as conditional uses, is compatible with the higher density residential character of this district.

72.41. *Permitted uses.* The following uses are permitted within an R-3 district:

(1) Single-family dwellings.

(2) Single-family attached dwellings.

(3) Two-family dwellings (duplexes).

(4) Multifamily dwellings.

(5) Home swimming pool, provided the location is not closer than ten feet to any property line and the pool is enclosed by a wall or fence at least four feet in height.

(6) Agriculture, forestry, livestock, and poultry production, provided that the operation is conducted on a tract of land not less than ten acres in area, and that no storage of manure or odor or dust producing substance or use shall be located within 200 feet of a property line, provided, however, any such structure existing at the time of passage of this resolution shall be allowed to extend to the existing building line but no nearer the property line than any existing portion of this [such] structure. All animals, except those generally recognized as pets, shall be kept in a structure, pen or corral.

(7) Accessory buildings and uses customarily incidental to any use allowed as a permitted or conditional use and located on the same lot as the principal structure or use, provided the requirements of section 93 are met.

(8) Home occupations, provided the requirements of section 95 are met.

(9) Gardening on land of one acre or less, when not otherwise existing as an accessory use. No zoning compliance permit is required for this use.

72.42. *Conditional uses.* The following uses may be allowed as conditional uses within an R-3 District:

(1) Churches and other places of worship, with attendant educational and recreational buildings, provided such use abuts a collector or arterial street and provided such buildings shall be placed not closer than 50 feet from any property line.

(2) Kindergartens, playschools, and day care centers and homes.

(3) Public and private schools, colleges, and libraries.

(4) Public utility structures and buildings, provided that the structure is properly screened as required in section 67.

(5) Publicly or privately owned and operated golf, swimming, tennis, or country clubs, community clubs or associations, athletic fields, parks, and similar recreational areas, provided that no buildings for such proposed use are located within 100 feet of any property line.

(6) Cemeteries, mausoleums, and crematories, provided the requirements of section 98 are met.

(7) Other public buildings and uses.

(8) Family, group, and congregate personal care homes.

(9) Residential child care facilities.

(10) Boarding and rooming houses.

(11) Professional offices or office buildings used exclusively for professional occupancy of such character as will not adversely affect adjacent and nearby residential properties.

(12) Hospitals, sanitariums, clinics, and convalescent or nursing homes.

(13) Drugstores, gift shops, florists, self-service laundries, newsstands, barber and beauty shops, dry cleaning and laundry pickup stations, and restaurants when included on the ground floor of a multifamily building or complex having 50 or more units. No business or advertising signs shall be displayed outside of enclosed buildings.

72.5. *R-MH manufactured home residential district.* The purpose of this district is to encourage the orderly development of and protect areas containing manufactured home residential uses, including manufactured home parks and manufactured homes on individual lots, and to ensure that such development as occurs in these areas, including governmental, educational, religious, and recreational facilities allowed as conditional uses, is compatible with the residential character of this district.

72.51. *Permitted uses.* The following uses are permitted within an R-MH district:

(1) Single-family dwellings.

(2) Type A or Type B manufactured homes, or a Type C manufactured home (if relocating within the county), as defined in section 91.1, on individual lots, and on permanent foundations, subject to the requirements of section 91.3. The manufactured home shall be 600 or more square feet in area.

(3) Home swimming pool, provided the location is not closer than ten feet to any property line and the pool is enclosed by a wall or fence at least four feet in height.

(4) Accessory buildings and uses customarily incidental to any use allowed as a permitted or conditional use, and located on the same lot as the principal structure or use, provided the requirements of section 93 are met.

(5) Agriculture, forestry, livestock and poultry production, provided that the operation is conducted on a tract of land not less than ten acres in area, and that no storage of manure or odor or dust producing substance or use shall be located within 200 feet of a property line, provided, however, any such structure existing at the time of passage of this resolution shall be allowed to extend to the existing building line but no nearer the property line than any existing portion of this [such] structure. All animals, except those generally recognized as pets, shall be kept in a structure, pen or corral.

(6) Home occupations, provided the requirements of section 95 are met.

(7) Gardening on land of one acre or less, when not otherwise existing as an accessory use. No zoning compliance permit is required for this use.

72.52. *Conditional uses.* The following uses may be allowed as conditional uses within an R-MH district:

(1) Churches and other places of worship, with attendant educational and recreational buildings, provided such use abuts a collector or arterial street and provided such buildings shall be placed not closer than 50 feet from any property line.

(2) Day care homes.

(3) Public and private schools, colleges, and libraries, excluding business or trade schools.

(4) Public utility structures and buildings, provided that the installation is properly screened as required in section 67 and serves the surrounding area. No office shall be permitted, and no equipment shall be stored on site.

(5) Publicly or privately owned and operated golf, swimming, tennis, or country clubs, community clubs or associations, athletic fields, parks, and similar recreational areas, provided that no buildings for such proposed uses are located within 100 feet of any property line.

(6) Cemeteries, mausoleums, crematories, provided the requirements of section 98 are met.

(7) Other public buildings and uses.

(8) Family personal care homes.

(9) Home swimming pool without a fence.

(10) Manufactured home parks, subject to the requirements of section 91.2.

(11) Communication towers, provided the requirements of section 98.5 are met.

(12) Accessory dwelling units, provided that the requirements of section 94.3 are met.

72.6. *R-1-R single-family rural-residential district.* The purpose of this district is to encourage the orderly development of and protect predominantly single-family rural-residential areas, and to ensure that such development as occurs in these areas, including governmental, educational, religious, and recreational facilities allowed as conditional uses, is compatible with the predominantly single-family rural-residential character of this district.

72.61. *Permitted uses.* The following uses are permitted within an R-1-R district:

(1) Single-family dwellings, provided that the home is enclosed under all exterior walls by a continuous masonry wall, with no openings in said wall except for required ventilation and access. A variance from the requirements of this provision may be obtained pursuant to section 116 for buildings in areas of historical significance.

(2) Accessory buildings and uses customarily incidental to any use allowed as a permitted or conditional use and located on the same lot as the principal structure or use, provided the requirements of section 93 are met.

(3) Home swimming pool, provided the location is not closer than ten feet to any property line and the pool is enclosed by a wall or fence at least four feet in height.

(4) Agriculture, forestry, livestock and poultry production, provided that the operation is conducted on a tract of land not less than ten acres in area, and that no storage of manure or odor or dust producing substance or use shall be located within 200 feet of a property line, provided, however, any structure existing at the time of passage of this resolution shall be allowed to extend to the existing building line but no nearer the property line than any existing portion of such structure. All animals except those generally recognized as pets shall be kept in a structure, pen or corral.

(5) Home occupations, provided the requirements of section 95 are met.

(6) Gardening on land of one acre or less, when not otherwise existing as an accessory use. No zoning compliance permit is required for this use.

72.62. *Conditional uses.* The following uses may be allowed as conditional uses within an R-1-R district:

(1) Churches and other places of worship, with attendant educational and recreational buildings, provided such use abuts a collector or arterial street and provided such buildings shall be placed not closer than 50 feet from any property line.

(2) Day care homes.

(3) Public and private schools, colleges, and libraries, excluding business or trade schools.

(4) Public utility structures and buildings, provided that the installation is properly screened as required in section 67 and serves the surrounding area. No office shall be permitted, and no equipment shall be stored on site.

(5) Publicly or privately owned and operated golf, swimming, tennis, or country clubs, community clubs or associations, athletic fields, parks, and similar recreation areas, provided that no buildings for such proposed uses are located within 100 feet of any property line.

(6) Cemeteries, mausoleums, and crematories, provided the requirements of section 98 are met.

(7) Other public buildings and uses.

(8) Family personal care homes.

(9) Accessory dwelling units, provided that the requirements of section 94.3 are met.

72.7. *R-1A single-family residential district.* The purpose of this district is to encourage the orderly development of and protect predominantly single-family residential areas, and to ensure that such development as occurs in these areas, including governmental, educational, religious, and recreational facilities allowed as conditional uses, is compatible with the predominantly single-family residential character of this district.

72.71. *Permitted uses.* The following uses are permitted within an R-1A district:

(1) Single-family dwellings, provided that the home is enclosed under all exterior walls by a continuous masonry wall, with no openings in said wall, except for required ventilation and access. A variance from the requirements of this provision may be obtained pursuant to section 116 for buildings in areas of historical significance.

(2) Accessory buildings and uses customarily incidental to any use allowed as a permitted or conditional use and located on the same lot as the principal structure or use provided the requirements of section 93 are met.

(3) Home swimming pool, provided the location is not closer than ten feet to any property line and the pool is enclosed by a wall or fence at least four feet in height.

(4) Agriculture, forestry, livestock and poultry production, provided that the operation is conducted on a tract of land not less than ten acres in area, and that no storage of manure or odor or dust producing substance or use shall be located within 200 feet of a property line, provided, however, any structure existing at the time of passage of this resolution shall be allowed to extend to the existing building line but no nearer the property line than any existing portion of such structure. All animals except those generally recognized as pets, shall be kept in a structure, pen or corral.

(5) Home occupations, provided the requirements of section 95 are met.

(6) Gardening on land of one acre or less, when not otherwise existing as an accessory use. No zoning compliance permit is required for this use.

72.72. *Conditional uses.* The following uses may be allowed as conditional uses within an R-1A district:

(1) Churches and other places of worship, with attendant educational and recreational buildings, provided such use abuts a collector or arterial street, and provided such buildings shall be placed not closer than 50 feet from any property line.

(2) Day care homes.

(3) Public and private schools, colleges, and libraries, excluding business or trade schools.

(4) Public utility structures and buildings, provided that the installation is properly screened as required in section 67 and serves the surrounding area. No office shall be permitted, and no equipment shall be stored on site.

(5) Publicly or privately owned and operated golf, swimming, tennis, or country clubs, community clubs or associations, athletic fields, parks, and similar recreation areas, provided that no buildings for such proposed uses are located within 100 feet of any property line.

(6) Cemeteries, mausoleums, and crematories, provided the requirements of section 98 are met.

(7) Other public buildings and uses.

(8) Family personal care homes.

(9) Accessory dwelling units, provided that the requirements of section 94.3 are met.

(Ord. No. 201203-2o, 3-20-2012; Ord. of 9-4-2014; Ord. of 8-4-2015)

Section 73. Commercial districts.

73.1. *C-1 neighborhood commercial district.* The purpose of this district is to encourage the orderly development of shopping areas which are primarily oriented toward serving the day-to-day shopping needs of persons living near these shopping areas. The size and scope of these areas should not be so large as to attract substantial amounts of trade from outside of the immediately surrounding territory. This district may also include additional uses designed to serve the governmental, educational, religious, recreational, and other immediate needs of persons in the surrounding area.

73.11. *Required conditions.* The following conditions apply to all uses within a C-1 district:

73.11.1. All sales, business, servicing, storage, or processing shall be conducted within a completely enclosed building, except where the nature of the activity is such that said activity must be conducted outside of a completely enclosed building. An exception to this regulation may be considered as a conditional use where its enforcement would create an unreasonable hardship.

73.11.2. Uses, processes, or equipment employed shall be those which are not objectionable by reason of odor, dust, light, heat, smoke, noise, or vibration.

73.11.3. Products shall be sold only at retail.

73.11.4. No single business activity shall occupy more than 40,000 square feet of building area.

73.12. *Permitted uses.* The following uses are permitted within a C-1 district:

(1) Art, camera and antique shops.

(2) Bakeries, employing not more than ten persons.

(3) Bicycle and motorcycle stores and repair shops.

(4) Bookstores and newsstands.

(5) Confectionery stores.

(6) Clothing, shoe, millinery, dry goods, variety, and notion shops.

(7) Drugstores.

(8) Florist, nursery and garden supply, and gift shops.

(9) Grocery, convenience, fruit and vegetable stores, meat markets, delicatessens, catering stores, and supermarkets.

(10) Hardware and paint stores.

(11) Hobby shop or toy stores.

(12) Household furnishings stores, not including a furniture store.

(13) Jewelry stores, including repair facilities.

(14) Record, video tape, and music stores, including rental outlets.

(15) Sporting goods stores.

(16) Appliance and consumer electronic product sales, rental and repair shops.

(17) Barber and beauty shops.

(18) Dressmaking and tailoring shops.

(19) Laundry and dry cleaning pickup stations and self-serving laundries.

(20) Locksmith or gunsmith shops.

(21) Photographic studios.

(22) Professional and business offices.

(23) Pet shops.

(24) Real estate agencies.

(25) Shoe repair shops.

(26) Restaurants, cafeterias, grills, and lunch counters having a size of less than 6,000 square feet, but not serving alcohol or including nightclubs, bars, taverns, and establishments with "drive-thru" service.

(27) Single- and two-family dwellings meeting lot area and yard requirements for said uses in an R-2 district.

(28) Type A manufactured homes, as defined in section 91.1 on individual lots and on permanent foundations, subject to the requirements of section 91.3.

(29) Home swimming pools, provided the location is not closer than ten feet to any property line and the pool is enclosed by a wall or fence not less than four feet in height.

(30) Banks, loan companies, and other financial institutions and branches thereof.

(31) Studios offering instruction in art, music, dancing, drama, or similar cultural activity.

(32) Signs, as provided for in section 97.

(33) Kindergartens, playschools, day care centers, and day care homes.

(34) Funeral homes and mortuaries.

(35) Public and private schools and libraries, excluding business or trade schools.

(36) Churches and other places of worship, with attendant educational and recreational buildings.

(37) Private clubs, lodges, and fraternal orders.

(38) Convalescent and nursing homes.

(39) Print or copy shops with not more than five employees.

(40) Veterinary hospitals, treating small animals only, provided that any structure or outside area used for such purpose shall be not closer than 100 feet to any residential district.

(41) Temporary uses, including sale of Christmas trees, carnivals, bazaars, the sale of seasonal fruits or vegetables from roadside stands, and tent revivals, subject to the provisions of section 93.

(42) Self-service car washes.

(43) Publicly or privately owned and operated golf, swimming, tennis, or country clubs, community clubs or associations, athletic fields, parks, and similar recreational areas.

(44) Accessory buildings and uses customarily incidental to any use allowed as a permitted or conditional use and located on the same lot as the principal structure or use, provided the requirements of section 93 are met.

(45) Communication towers, provided the requirements of section 98.5 are met.

73.13. *Conditional uses.* The following uses may be allowed as conditional uses within a C-1 district:

(1) Automobile service stations and sales of motor fuels in connection with another use, provided the requirements of section 96 are met.

(2) Indoor recreational or amusement facilities, including gymnasiums and health clubs, bowling alleys, billiard halls, and amusement arcades.

(3) Public utility structures and buildings, which may contain offices and storage facilities, but not including radio and television transmission stations and electric generating stations, provided the installation is properly screened as required in section 67.

(4) Other retail or service establishments similar in character to those classified as permitted uses in a C-1 district, provided that such use is compatible with the intent of this district, expressed herein.

(5) Shopping centers containing uses classified as permitted or conditional uses in a C-1 district, with gross floor area not greater than 60,000 square feet and no store having a gross floor area greater than 40,000 square feet.

73.2. *C-2 general commercial district.* The purpose of this district is to encourage the orderly development of general commercial areas containing a variety of retail and service establishments. This district may also include additional uses designed to serve the governmental, educational, religious, recreational, and other needs of persons residing over a large portion of the county.

73.21. *Required conditions.* The following conditions apply to all uses within C-2 districts:

73.21.1. All sales, business, servicing, storage, or processing shall be conducted within a completely enclosed building, except where the nature of the activity is such that said activity must be conducted outside of a completely enclosed building. An exception to this regulation may be considered as a conditional use where its enforcement would create an unreasonable hardship.

73.21.1.[2] Uses, processes, or equipment employed shall be those which are not objectionable by reason of odor, dust, light, heat, smoke, noise or vibration.

73.22. *Permitted uses.* The following uses are permitted within a C-2 district:

(1) Any retail or commercial use in which there is no processing or treatment of materials, goods, or products.

(2) Any nonresidential use permitted in a C-1 neighborhood commercial district.

(3) Bakeries.

(4) Printing, blueprinting, bookbinding, photostating, xerography, lithography, and publishing establishments.

(5) Funeral homes, mortuaries, and ambulance services.

(6) Dry cleaning and commercial laundry establishments.

(7) Theaters, auditoriums and assembly halls.

(8) Hospitals, sanitariums, clinics, and convalescent and nursing homes.

(9) Indoor recreational or amusement facilities, including gymnasiums and health clubs, bowling alleys, billiard halls, and amusement arcades.

(10) Automobile service stations and sales of motor fuels in connection with another use, provided the requirements of section 96 are met.

(11) Radio and television broadcasting studios.

(12) Public and private schools, colleges, museums, libraries, and institutions of a similar nature, including trade and business schools.

(13) Bus and railroad terminal facilities.

(14) Car washes, provided that a paved area shall be located on the same lot equal to one-third the number of cars practically accommodated by any washing machinery, excluding hand-held sprayers, times 200 square feet. In addition, a maximum of two curb breaks, each no wider than 30 feet and no closer than 20 feet to a street intersection, shall be provided.

(15) Publicly or privately owned and operated golf, swimming, tennis, or country clubs or associations, athletic fields, parks, and similar recreation areas.

(16) Commercial parking garage or lot, provided no entrance or exit shall be on the same side of the street and within the same block as a school and the curb breaks shall be limited to two for each 100 feet in street frontage, each not to exceed 30 feet in width and located not closer than 20 feet to a street intersection.

(17) Bottling works for soft drinks.

(18) Motels and hotels.

(19) Food locker plant renting lockers for the storage of food, including sale at retail, delivery, cutting, and packaging of meats, but not including slaughtering.

(20) Automobile, boat, recreational vehicle, farm equipment and implement, and manufactured home sales or servicing establishments, provided any repair or servicing must be conducted within a structure which shall not have any opening, other than a stationary window or door for pedestrian ingress or egress, within 100 feet of any residential district, and provided further that all vehicles on a used car sales lot shall be in operating condition at all times. Any operations or storage of vehicles or parts shall be properly screened from view from public rights-of-way, as provided in section 67.

(21) Restaurants, including those with "drive-thru" facilities, but not serving alcohol.

(22) Milk bottling and distribution and ice cream manufacture.

(23) Self-storage warehouses, provided that use shall be limited to storage only, all storage shall be within the building area, and no auctions or commercial sales shall be conducted on the site.

(24) Signs as provided in section 97.

(25) Public utility structures and buildings, which may include offices and storage facilities but not including radio and television transmission stations and electric generating stations, provided the installation is properly screened as required in section 67.

(26) Accessory buildings and uses customarily incidental to any use allowed as a permitted or conditional use and located on the same lot as the principal structure or use, provided the requirements of section 93 are met.

(27) Public buildings and uses.

(28) Communication towers, provided the requirements of section 98.5 are met.

(29) Furniture stores.

(30) Automobile parts and supply stores, provided sales are restricted to new and remanufactured parts. No used or salvaged parts may be sold.

73.23. *Conditional uses.* The following uses may be allowed as conditional uses within a C-2 district:

(1) Wholesale warehouses.

(2) Shopping centers containing uses classified as permitted or conditional in a C-2 district.

(3) Trade shops, including sheet metal, roofing, upholstering, electrical, plumbing, drapery, cabinet making and carpentry, rug and carpet cleaning, and sign painting shops, provided that all operations are conducted entirely within a building which shall not have any openings, other than stationary windows or doors for pedestrian ingress and egress, facing a residential district, within 100 feet of any such district.

(4) Campgrounds, provided the requirements of section 98 are met.

(5) Outdoor entertainment facilities, including stadiums, theaters, drive-in theaters, and concert facilities, provided that acceleration and deceleration lanes of at least 200 feet are provided for the use of vehicles entering or leaving the facility or its parking areas, and further provided that any motion picture screen is not visible from any freeway, expressway, arterial or collector street, as classified in section 65, within 2,000 feet of such screen.

(6) Restaurants serving alcohol, provided that the sale of alcoholic beverages is a secondary feature of the restaurant.

(7) Other predominately retail or service establishments similar in character to those classified as permitted uses in a C-2 district, provided that such use is compatible with the intent of this district, expressed herein.

73.3. *C-3 entertainment commercial district.* The purpose of this district is to provide a location for entertainment facilities catering to the adult population of the county, including bars, taverns, nightclubs, and dance halls. This district may also include additional commercial uses compatible with entertainment-oriented uses.

73.31. *Required conditions.* All sales, business, servicing, storage, or processing shall be conducted within a completely enclosed building, except where the nature of the activity is such that said activity must be conducted outside of a completely enclosed building. However, all business activities and transactions associated with adult entertainment establishments shall be conducted within an enclosed building.

73.32. *Permitted uses.* The following uses are permitted within a C-3 district:

(1) Bars, taverns, and clubs, including those having live entertainment.

(2) Adult entertainment establishments, subject to the requirements in section 99.

(3) Any use permitted in a C-2 general commercial district.

(Ord. No. 201203-2o, 3-20-2012)

Section 74. Wholesale and industrial districts.

74.1. *M-1 wholesale and light industrial district.* The purpose of this district is to encourage the orderly development of areas containing wholesale and light industrial uses where resultant noise, odors, pollution, and congestion are minimized. This district includes other commercial uses consistent in character with wholesale and light industrial uses.

74.11. *Permitted uses.* The following uses are permitted within an M-1 district:

(1) All permitted uses within a C-2 general commercial district.

(2) Ice plants.

(3) Contractor's storage and equipment yards when located entirely within a building or fenced area and properly screened as provided in section 67.

(4) Wholesale and storage warehouses and distribution centers.

(5) Trade shops, including sheet metal, roofing, upholstering, electrical, plumbing, drapery, cabinet making and carpentry, rug and carpet cleaning, and sign painting shops, provided that all operations are conducted entirely within a building which shall not have any openings, other than stationary windows or doors for pedestrian ingress and egress, facing a residential district within 100 feet of any such district.

(6) Agriculture, forestry, livestock, and poultry production, provided that the operation is conducted on a tract of land not less than ten acres in area, and that no structure containing poultry or livestock and no storage of manure or odor or dust producing substance or use shall be located within 200 feet of a property line.

(7) Truck terminals, provided that they are not located adjacent to residential uses, and that acceleration and deceleration lanes of at least 200 feet in length are provided for trucks entering and leaving the site.

(8) Auto auctions.

(9) Type A or Type B manufactured home units or other single-family dwellings for the exclusive use of a watchman or caretaker when located on the same tract as an industrial use, provided the dimensional requirements of the R-3 multifamily residential district are satisfied.

(10) Establishments for light manufacture, repair, assembly, or processing, including:

(a) Confectionery manufacture.

(b) Clothing and garment manufacture.

(c) Laboratories for testing materials, chemical analysis, and processing photographic material.

(d) Manufacture and assembly of scientific, optical, and electronic equipment.

(e) Manufacture of musical instruments and parts.

(f) Manufacture of souvenirs and novelties.

(g) Manufacture of toys, sporting and athletic goods.

(h) Manufacture of food processing equipment.

(i) Other light industrial uses similar in character and type to those uses permitted in subsections (a) through (h), above.

(11) Food processing plants which do not involve the slaughtering or cleaning of animal carcasses on the premises.

(12) Outdoor entertainment facilities, including stadiums, theaters, drive-in theaters, and concert facilities, provided that acceleration and deceleration lanes of at least 200 feet are provided for the use of vehicles entering and leaving the facility or its parking areas, and further provided that any motion picture screen is not visible from any freeway, expressway, arterial or collector street, as classified in section 65, within 2,000 feet of such screen.

(13) Signs as provided in section 97.

(14) Accessory buildings and uses customarily incidental to any use allowed as a permitted or conditional use and located on the same lot as the principal structure or use, provided the requirements of section 93 are met.

(15) Communication towers, provided the requirements of section 98.5 are met.

74.12. *Conditional uses.* The following uses may be allowed as conditional uses within an M-1 district:

(1) Outside, aboveground storage tanks for gasoline, liquefied petroleum gas, oil or other inflammable liquids or gases, provided that all pertinent rules and regulations of the Georgia Safety Fire Commission are met.

(2) Development of natural resources, including the removal of minerals and natural materials, together with the necessary buildings, machinery, and appurtenances thereto, provided the requirements of section 98 are met.

74.2. *M-2 general industrial district.* The purpose of this district is to encourage the orderly development of areas containing uses which may be obnoxious by reason of emission of odors, dust, smoke, gas, noise, heat or vibration. This district may include commercial uses consistent in character with heavy industrial uses.

74.21. *Permitted uses.* The following uses are permitted within an M-2 district:

(1) Business and professional offices.

(2) Public utility structures and buildings, which may contain offices and storage facilities, provided the installation is properly screened as provided in section 67.

(3) Contractor's storage and equipment yards when located entirely within a building or within a fenced area when properly screened as provided in section 67.

(4) Building and lumber supply yards, provided the requirements of section 67 are met.

(5) Wholesale and storage warehouses and distribution centers.

(6) Automobile service stations, provided the requirements of section 96 are met.

(7) Produce and farmers' markets.

(8) Bus and railroad terminal facilities.

(9) Truck terminals, provided that they are not located adjacent to residential uses, and that acceleration and deceleration lanes of at least 200 feet in length are provided for trucks entering and leaving the site.

(10) Auto auctions.

(11) Type A or Type B manufactured home units or other single-family dwellings for the exclusive use of a watchman or caretaker when located on the same tract as an industrial use, provided the dimensional requirements of the R-3 residential district are met.

(12) Automobile, boat, recreational vehicle, farm equipment and implement, manufactured home, and heavy equipment sales or servicing establishments, provided any repair or servicing must be conducted within a structure which shall not have any opening, other than a stationary window or door for pedestrian ingress and egress, within 100 feet of any residential district, and provided further that all vehicles on a used car sales lot shall be in operating condition at all times. Any operations or storage of vehicles or parts shall be properly screened from view from public rights-of-way, as provided in section 67.

(13) Dry cleaning and commercial laundry facilities.

(14) Car washes, provided that a paved area shall be located on the same lot equal to one-third the number of cars practically accommodated by any washing machinery, excluding hand-held sprayers, times 200 square feet. In addition, a maximum of two curb breaks, each no wider than 30 feet to a street intersection.

(15) Retail uses selling products manufactured on the premises.

(16) Temporary uses, including the sale of Christmas trees, carnivals, bazaars, the sale of seasonal fruits and vegetables from roadside stands, and tent revivals, subject to the provisions of section 93.

(17) Outside, aboveground storage tanks for gasoline, liquefied petroleum gas, oil or other inflammable liquids or gases, provided that all pertinent rules and regulations of the Georgia Safety Fire Commission are met.

(18) Radio and television broadcasting studios.

(19) Electrical, heating and plumbing supply stores.

(20) Farm and garden supply stores.

(21) Appliance stores, including repairs and service.

(22) Furniture and home furnishings stores.

(23) [Reserved.]

(24) Office supply stores.

(25) Automotive part and supply stores.

(26) Automobile, boat, recreational vehicle, farm equipment and implement, and manufactured home sales.

(27) Agriculture, forestry, livestock and poultry production, provided that the operation is conducted on a tract of land not less than ten acres in area, and that no structure containing poultry or livestock and no storage of manure or odor or dust producing substance or use shall be located within 200 feet of a property line.

(28) Signs as provided in section 97.

(29) Accessory buildings and uses customarily incidental to any use allowed as a permitted or conditional use and located on the same lot as the principal structure or use, provided the requirements of section 93 are met.

(30) Communication towers, provided the requirements of section 98.5 are met.

(31) All permitted uses within an M-1 wholesale and light industrial district.

74.22. *Conditional uses.* The following uses may be allowed as conditional uses within an M-2 district:

(1) The manufacturing, processing, fabrication, repair, and servicing of any commodity or product, subject to the following conditions:

(a) Any such use as determined by the zoning enforcement officer that may be obnoxious or offensive by reason of the emission of odors, dust, smoke, gas, noise, or vibration shall be referred to the environmental protection division of the Georgia Department of Natural Resources; and

(b) Prior to the issuance of a zoning compliance permit, the applicant shall provide the zoning enforcement officer with written approval of the nature, plans, and specifications of the said use from the environmental protection division of the Georgia Department of Natural Resources; and

(c) All other requirements within the district in which these industrial activities can be located shall be met.

(2) Development of natural resources, including the removal of mineral and natural materials, together with the necessary buildings, machinery, and appurtenances thereto, provided the requirements of section 98 are met.

(3) Junkyards, provided the following conditions are met:

(a) No such operation shall be permitted to locate closer than 1,000 feet from a residential subdivision and no closer than 50 feet from any property line.

(b) No such operation shall be permitted to locate on or facing a state or federal highway.

(c) All such operations shall be completely enclosed by an opaque fence or wall, except for driveway areas, having a minimum height of six feet, but in no case less than such height as will effectively screen all operations from view.

(d) The number of vehicular driveways permitted on any single street frontage shall be limited to one per 500 feet with a maximum of 20 feet of driveway width.

(Ord. No. 201203-2o, 3-20-2012)

ARTICLE VIII. OTHER REQUIREMENTS BY DISTRICTS

Section 81. Minimum lot area, lot width, and maximum lot coverage.

81.1. *Table of requirements by district and use.* Within the zoning districts listed herein, the following requirements shall apply except as otherwise provided:

District and Type of Use	*Minimum Lot Area (sq. ft. per unit)*	*Minimum Lot Width Measured at Building Line (ft.)*	*Maximum Lot Coverage (%)*
TABLE 6			
AG-1 Agricultural/Rural District			
All Permissible Uses:			
with septic tank and well	87,120	150	25
with septic tank and water system	87,120	150	25
with sewer and water system	87,120	150	25
AG-R Agricultural/ Residential District			
All Permissible Uses:			
with septic tank and well	87,120	100	25
with septic tank and water system	87,120	100	25
with sewer and water system	87,120	100	25
R-R Rural-Residential District			
All Permissible Uses:			
with septic tank and well	43,560*	150	25
with septic tank and water system	22,500*	100	25
with sewer and water system	20,000*	100	25

District and Type of Use	*Minimum Lot Area (sq. ft. per unit)*	*Minimum Lot Width Measured at Building Line (ft.)*	*Maximum Lot Coverage (%)*
R-1 Single-Family Residential District			
All Permissible Uses:			
with septic tank and well	43,560*	150	20
with septic tank and water system	22,500*	100	20
with sewer and water system	20,000	100	20
R-1A Single-Family Residential District			
All Permissible Uses:			
with septic tank and well	43,560*	150	20
with septic tank and water system	22,500*	100	20
with sewer and water system	13,000	80	25
R-2 Two-Family Residential District			
Single-Family Dwelling:			
with septic tank and well	43,560*	150	25
with septic tank and water system	15,000*	100	25
with sewer and water system	13,000	80	25
Single-Family Attached Dwelling:			
with sewer and water system	2,000 [1,2]	20	30
Two-Family Dwelling (Duplex)			
with septic tank and well	43,560*	150	25
with septic tank and water system	10,000*	100	25
with sewer and water system	8,000	85	25
Other Permissible Uses:			
with septic tank and well	43,560*	150	25
with septic tank and water system	15,000	100	25
with sewer and water system	13,000	100	25
TABLE 7			
R-3 Multifamily Residential			
Single-Family Dwelling:			
with septic tank and well	43,560*	150	30
with septic tank and water system	15,000*	100	30
with sewer and water system	13,000	85	30
Two-Family Dwelling:			
with septic tank and well	43,560*	150	30
with septic tank and water system	10,000*	100	30
with sewer and water system	8,000	85	30
Single-Family Attached Dwelling:	2,000 [1,2]	20	30
Multifamily Dwelling:	2,000 [1,2]	85	30
Other Permissible Uses:			

District and Type of Use	*Minimum Lot Area (sq. ft. per unit)*	*Minimum Lot Width Measured at Building Line (ft.)*	*Maximum Lot Coverage (%)*
with septic tank and well	43,560*	150	30
with septic tank and water system	15,000	100	30
with sewer and water system	13,000	85	30
TABLE 8			
R-MH Manufactured Home Residential District			
Manufactured Home Parks	Section 91.2		
Manufactured Homes:			
with septic tank and well	43,560*	150	25
with septic tank and water system	22,500*	100	25
with sewer and water system	15,000	85	25
Single-Family Dwelling:			
with septic tank and well	43,560*	150	25
with septic tank and water system	22,500*	100	25
with sewer and water system	15,000	85	25
Other Permissible Uses:			
with septic tank and well	43,560*	150	25
with septic tank and water system	22,500*	100	25
with sewer and water system	15,000	85	25
R-1-R Single-Family Rural-Residential District			
with septic tank and well	87,120	150	25
with septic tank and water system	87,120	100	25
with sewer and water system	87,120	100	25
C-1 Neighborhood Commercial District			
with septic tank and well	43,560*	150	50
with septic tank and water system	15,000*	100	50
with sewer and water system	3,500	30	80
C-2 General Commercial District			
with septic tank and well	43,560*	150	50
with septic tank and water system	15,000*	100	50
with sewer and water system	3,500	30	80
C-3 Entertainment Commercial District	See section 99		
TABLE 9			
M-1 Light Industrial District			
All Permissible Uses:			
with septic tank and well	43,560	150	50
with septic tank and water system	15,000	100	50
with sewer and water system	10,000	75	80

District and Type of Use	Minimum Lot Area (sq. ft. per unit)	Minimum Lot Width Measured at Building Line (ft.)	Maximum Lot Coverage (%)
M-2 General Industrial District			
All Permissible Uses:			
with septic tank and well	43,560	150	65
with septic tank and water system	22,500	100	65
with sewer and water system	20,000	80	80
PUD Planned Unit Development District	See section 102		

* See section 85 for lot size modifications based on ground water pollution susceptibility.

[1] The developer of single-family attached and multifamily dwellings is required to set aside an additional 4,000 square feet of common open space for each dwelling unit. This area cannot be used for any other purpose except as open space. See section 92.

[2] When located adjacent to arterial or collector streets, minimum lot width measured at the property line facing said street shall be at least 100 feet.

(Ord. No. 201203-2o, 3-20-2012; Ord. of 6-5-2018)

Section 82. Minimum setbacks and maximum building heights.

Within the zoning districts listed herein, the following minimum setbacks and maximum building heights shall apply:

District and Type of Use	Adjacent to Arterial and Collector Streets	Adjacent to Minor Streets	Rear Yard (ft.)	Interior Lot	Max Bldg. Ht. (ft.)
TABLE 10					
AG-1 all uses	60	50	50	20	35[1]
AG-R all uses	50	30	35	20	35[1]
R-R all uses	50	30	35	20	35[1]
R-1 all uses	50	30	35	20	35[1]
R-1A all uses	50	30	35	10	35[1]
R-2 all uses	50	30	35	10[2]	35[1]
R-3 all uses	50	30	35	10[2]	35[1]
R-MH all uses except mobile home parks	50	30	35	20	35[1]
Mobile home parks	Section 91				
R-1-R all uses	60	50	50	20	35[1]
C-1 all uses	40	30	25[3]	*[4]	35[1]
C-2 all uses	40	30	25[3]	*[4]	35[1]
C-3 all uses	Section 99				

District and Type of Use	*Adjacent to Arterial and Collector Streets*	*Adjacent to Minor Streets*	*Rear Yard (ft.)*	*Interior Lot*	*Max Bldg. Ht. (ft.)*
M-1 all uses	50	30	25[5]	25	35[1]
M-2 all uses	50	30	25[5]	25	35[1]
PUD all uses	Section 101				

[1] No building or structure shall exceed 35 feet in height, except as specified in section 52.

[2] No side yard is required for interior units in a single-family attached development; ten feet side yard setbacks are required for ends of each grouping of single-family attached units when the end unit is located on an interior lot.

[3] Where the rear property line is a residential district boundary line, a continuous buffer shall be required along the full length of the rear property line. This buffer shall be of the type and material specified in section 67.2.

[4] Side yard setbacks shall be not less than 25 feet where the side yard property line is a residential district boundary, but where the side yard is adjacent to a lot within a C-1 or C-2 district, no side yard shall be required, provided that the structures involved are to have a common or party wall, or to have no space between the walls of adjacent structures, otherwise, a side yard setback of no less than five feet shall be required.

[5] A rear yard setback of 25 feet is required as a minimum except:

1) Where the rear property line is a residential district boundary, the rear yard setback shall be no less than 50 feet. The rear yard area within the fifty-foot setback shall not be used for any processing activity, storage, building, or structure, however it may be used for off-street parking lots for passenger vehicles, and landscaping. A continuous buffer meeting the specifications of section 67.2 shall be required along the full length of the rear property line.

2) Where the rear property line coincides with a railroad siding or right-of-way, the rear yard setback may be reduced to zero; provided, however, that the railroad siding or right-of-way does not border a residential district. In such case, the setback and yard requirements shall be as provided above. If the railroad right-of-way is parallel and adjacent to an arterial or collector street, a rear yard setback of not less than 25 feet and a buffer shall be required.

(Ord. No. 201203-2o, 3-20-2012)

Section 83. HD historic overlay zoning district.

The purpose of this district is to protect areas deemed to possess special historical, cultural, and aesthetic features. The HD historic overlay zoning district designation shall be

placed upon a specific area, which shall also be included in an agricultural/rural, residential, commercial, industrial, or planned unit development district. The requirements contained herein are in addition to requirements applicable to that underlying zoning district.

83.1. *Certificate of appropriateness required.* Where a certificate of appropriateness is required by the Jones County Historic Preservation Commission Ordinance for construction, structural alteration, or use of land in an HD district, no person shall undertake that construction, structural alteration; or use without having first obtained a certificate of appropriateness.

83.2. *Effect on zoning permit process.* A zoning compliance permit or conditional use permit shall not be issued for any construction, structural alteration, or use of land in an HD district for which a certificate of appropriateness is required and has not been issued. An application for a conditional use may be considered and approved contingent upon issuance of a certificate of appropriateness.

83.3. *Failure to obtain a certificate of appropriateness.* If the historic preservation commission finds that a certificate of appropriateness has not been obtained as directed by the Jones County Historic Preservation Commission Ordinance for construction, structural alteration, or use of land in an HD district, the historic preservation commission may direct that a stop work order be placed on the project by the zoning enforcement officer.

(Ord. No. 201203-2o, 3-20-2012; Ord. No. 201601-1o, 1-5-2016)

Section 84. Buffer and landscape standards for gateway overlay zoning district.

This section enacts a new article to provide guidance in the management of development along the major highways entering Jones County, which are U.S. Route 129, Georgia Route 22, Georgia Route 11, Georgia Route 18, Georgia Route 49, Georgia Route 57, and the proposed Gray Bypass; and shall apply to all properties bordering these highway corridors. These are the major highways through Jones County, which are traveled daily by many people and are home to numerous businesses and residents, thus making these highway corridors the major gateways to Jones County with much value to the community, both economically and aesthetically.

The purpose of this section is to set standards for development of property fronting these highway corridors, including the establishment of buffers and the preservation and establishment of landscaping and trees as a part of all land-disturbing activities in order to safeguard the ecological and aesthetic environment necessary for the health, safety, and welfare of the public, to enhance and protect property values, and to make Jones County a more attractive place to live, visit, and conduct business.

Buffer areas visibly separate one use from another through screening and distance; shield and block noise, light, glare or visual or other conditions; block physical passage to nonsimilar areas; and reduce air pollution, dust, dirt, and litter.

Trees, woodland areas, and landscape strips act as buffers against noise, wind and sun; filter out pollutants; assist in stabilizing the soil; reduce erosion and stormwater runoff; improve water quality; enhance wildlife; and increase the aesthetic, social, and property values of the community.

Thus, the board of commissioners of Jones County hereby finds that requirements for buffers, the planting of new trees and other landscape material, the protection and preservation of trees as part of the land development process along the gateway highways U.S. Route

129, Georgia Route 22, Georgia Route 11, Georgia Route 18, Georgia Route 49, Georgia Route 57, and the proposed Gray Bypass are public purposes and provide for the public health and general welfare.

Regulations of the gateway overlay zoning district are as follows:

84.1. *Applicability.* Any lot within 500 feet of a gateway highway shall be included in the gateway overlay. If any portion of a lot is affected by the overlay than the entire lot shall conform to section 84. Buffers shall be required between dissimilar districts, incompatible uses or specified properties, frontage strips shall be required for all property fronting on a gateway, landscape strips shall be provided between commercial properties, and parking lots shall provide required landscaping in accordance with the provisions of the gateway overlay zoning district or as a condition of zoning, building permit, conditional use permit or variance approval.

84.2. *Specific definitions.*

a. *Buffer:* A vegetative or combination of vegetative and nonvegetative materials of sufficient density to screen activities, structures and uses on the property from view from the normal level of a first story window on an abutting lot and shall further provide a year-round effective visual screen. All vegetation used for screening shall be at least three feet in height at time of installation. Planting bed width minimum requirements for screening shall be in accordance with section 84.41, Table B-1.

b. *Frontage strip:* Area of required landscaping along the right-of-way of gateway roads. Planting bed widths shall be in accordance with section 84.42, Table B-2. It shall be permitted to remove understory vegetation and tree limbs in order to allow for development on adjacent property to be seen from a major thoroughfare. Modification of a frontage strip can only be done with the approval of the zoning enforcement officer. In addition to understory clearing and limbing, it can include grading, berming, and relandscaping, provided none of the modifications to the frontage strip adversely affect the existing mature trees in the frontage strip.

c. *Gateway:* Roadway designated in section 84 as part of the gateway overlay zoning district.

d. *Landscaping:* Any additions to the natural features of a plot of ground to construction disturbance and to make it more attractive, as by adding lawns, trees, shrubs, etc., to the natural environment.

e. *Landscape strip:* Area of required landscaping between commercial lots. Planting bed width shall be in accordance with section 84.33.

f. *Major change:* Shall include, but not be limited to, any change in zoning or use of property. Also includes additions to existing sites that increase the developed area by more than 25 percent. Only areas affected by the new development shall conform to the requirements of this section.

g. *Owner:* The person in whom is vested the fee ownership, dominion or title of property, by proprietor; this term may also include a tenant, if chargeable under his lease for the maintenance of the property, and any agent of the owner or tenant, including the developer.

h. *Screening:* Vegetative or nonvegetative means of blocking items or area from view.

i. *Specialist*: One who is capable of designing the proper installation of landscaping.

j. *Tree:* Any self-supporting, woody perennial plant usually having a single trunk diameter of three inches or more measured no closer than six inches from the ground and which will reach at least 20 feet in height at maturity and which, when planted, is a minimum height of six feet; or such tree may be a flowering tree with a minimum height of six feet.

84.3. *General provisions.*

a. A to-scale preliminary landscape planting and maintenance plan designed by a specialist in accordance with these standards shall be submitted to the zoning enforcement officer and approved prior to the issuance of any land-disturbing permit or building permit where a major change in use takes place. Installation of plant materials shall have been completed or bonded prior to the issuance of a certificate of occupancy. Bond shall be equal to 100 percent of the estimated cost of replacing all landscaping required by these specifications.

b. No buffer, frontage strip, landscape strip, parking lot landscape or screening required by these specifications shall be removed without the written permission of the zoning enforcement officer.

c. All required vegetation and fencing shall be maintained by the owner in a healthy and attractive manner.

d. The zoning enforcement officer, upon site inspection or development plan review, may require an applicant to naturalize areas which visually affect public rights-of-way. The intent of this requirement is to supplement landscape requirements in areas where screening or landscape visual continuity is required.

e. All required landscaping shall be so designated on the appropriate permit application(s) and indicated on the required site plan.

f. Structures including driveways, parking facilities, or retaining walls will be located a minimum of five feet from any buffer or frontage strip.

g. Selection of all plant material will be from the list in section 84.10. No other vegetation may be used to satisfy the plantings required by these specifications.

h. Trees and shrubs required herein may be planted and spaced singularly or in groups as authorized by the zoning enforcement officer so long as the total

number of required plantings are achieved. Where existing vegetation is satisfactory to the zoning enforcement officer it may be utilized to satisfy the landscaping requirements.

84.31. *Buffers.*

a. Buffers shall be planted and arranged to provide an effective visual screen within a maximum of one year of planting. Buffers shall be established and maintained by the developer and/or owner/owners along required property lines in accordance with section 84.41, Table B-1 and any other standards contained herein.

b. Buffers shall meet the minimum depth requirements contained in section 84.4, Table B-1, except as authorized to be reduced by the applicable buffer variance provisions in section 84.6.

c. Buffers shall be natural, undisturbed and free of encroachments except as authorized by a condition of zoning, variance approval or as authorized herein, and may contain existing tree cover and vegetation as well as any supplemental plantings or replantings as may be required.

d. Nonvegetative materials may be utilized to satisfy the buffer requirements of this resolution, in addition to the use of existing vegetation and/or supplemental plantings as required. Such materials may include a fence or wall of solid construction or an earthen berm.

   1. If nonvegetative screens are to be utilized, their placement and installation shall be such so as to cause minimal disturbance of existing vegetation and located so as to provide an effective visual screen.

   2. If nonvegetative screens are to be utilized, the outer or public side shall be landscaped to soften the structure. This shall be accomplished with trees and/or shrubs.

e. Buffers required alongside property lines shall extend to a street right-of-way line unless otherwise required as a condition of zoning, special use, or variance approval.

f. Minimum buffer requirements for conditional uses shall be determined by the zoning district in which such use is a permitted use.

g. Hedges in the buffer area shall be a minimum of two feet in height immediately upon planting, and shall be planted and maintained so as to form a continuous, unbroken, solid visual screen within a maximum of one year after planting. Hedges shall also be arranged in a curvilinear manner, with no straight linear runs in excess of 100 feet.

84.32. *Frontage strips.* For every 20 feet of depth required in the frontage strip it shall contain the following landscaping and plantings:

a. At least one tree shall be provided for each 25 linear feet of frontage strip measured parallel to the road the lot fronts on.

b. Where healthy trees or other native plant materials exist on a site prior to its development, islands and buffers of such material should be incorporated into the design with special attention to the saving and preservation of trees with trunk caliper of five inches or more at a height of four and one-half feet above the ground. For every tree preserved that meets the above criteria, three of the trees that are required to be planted in the frontage strip by this section may be omitted.

c. At least one shrub for each 25 linear feet of frontage strip measured parallel to the road the lot fronts on shall be provided.

d. The remaining ground area shall be sodded, seeded or hydroseeded with grass, and/or planted with ground cover species and/or provided with other landscaping material, or any combination thereof.

1. If sod is chosen, then grass shall be well matted with roots. The sod shall be taken up in rectangles (preferably 12 inches by 24 inches), shall be a minimum of two inches in thickness, and shall be live, fresh, and uninjured at the time of planting. The sod shall have a soil mat of sufficient thickness adhering firmly to the roots to withstand all necessary handling. The sod shall be planted as soon as possible after being dug, and shall be shaded and moist until it is planted.

2. In all residential and agricultural zones with the exception of R-MH, R-2 and R-3, the owner may choose to have a frontage strip that is made up entirely of grass and/or ground covers as specified in (section) 84.32.e., above [below].

e. Required frontage strips shall not be encroached upon by parking spaces, driveway surfaces or stormwater detention facilities. The only encroachments permitted are:

1. Driveway crossings may traverse such strip as near to a perpendicular alignment as practical.

2. A single sign, in conformance with section 97, may be placed in the frontage strip and landscaping may be arranged to allow a site distance of 500 feet in both directions. Distance shall be measured along centerline of the highway.

84.33. *Landscape strips.* All property zoned C-1, C-2, C-3, M-1 and M-2 shall have a landscape strip along any rear and side property lines abutting another commercial/industrial property. The landscape strip shall meet the following specifications:

a. The landscape strip shall be contiguous with property line and a minimum of five feet in depth.

b. At least one tree shall be provided for each 25 linear feet of landscape strip measured parallel to the property line.

c. At least one shrub for each 25 linear feet of frontage strip measured parallel to the road the lot fronts on shall be provided.

d. The remaining ground area shall be sodded, seeded or hydroseeded with grass, and/or planted with ground cover species and/or provided with other landscaping material, or any combination thereof.

84.34. *Parking lot landscape.*

a. Landscaping in all parking areas shall be incorporated into the landscaping and development plan for each parcel, and shall present an attractive appearance when viewed from the structure it supports.

b. Entry drives into parking areas shall be landscaped, and shall incorporate the design of landscaping in adjoining buffer areas. The design shall incorporate approved trees and shrubs in a manner that visually emphasizes the area and offers the driver and pedestrian an attractive appearance. There should be a direct relationship with the building entry. Should a divided entry or median be proposed, the median shall be designed in a like manner. Landscape treatment of entry areas shall not incorporate hedging or berms in such a manner as to interfere with, or obstruct the view of, vehicular or pedestrian traffic.

c. Off-street parking lots which are required to contain at least five off-street parking spaces shall contain attractive perimeter landscaping and plantings conforming to the overall landscape design and shall meet the following requirements:

1. One tree for each five spaces around the perimeter of the parking lot shall be provided.
2. The minimum planting area or space for each tree shall be at least 25 square feet.
3. Trees shall be planted in areas surrounding the perimeter of the parking lot. Trees may be planted and spaced singularly or in groups.
4. Ground areas shall be sodded, seeded or hydroseeded with grass and/or planted with ground cover species and/or provided with other landscaping material, or any combination thereof.

d. Off-street parking lots which are required to contain ten or more off-street parking spaces shall contain landscaping and plantings as delineated in [paragraph] c. above and additionally as follows:

1. One tree for each ten spaces on the interior of the parking lot shall be provided.
2. Trees shall be planted in planting areas or islands internal to the parking lot.

e. Vegetation provided in buffers, landscape and frontage strips can be counted as part of parking lot landscape, provided the vegetation meets the minimum required by section 84.34. To be counted as such, the vegetation must be located within ten feet of the parking lot.

84.35. *Screening.* A screen shall be required for purposes of obscuring features from public view. Such features include, but are not limited to, dumpsters, rear entrances, utility and maintenance structures and loading facilities, or any operation not conducted within a building, such as drive-in businesses, outdoor recreation, outdoor storage of materials, outdoor servicing activities, public utility equipment, such as electrical or gas substations.

84.4. *Minimum buffer and frontage strip size.* The minimum depth of required buffers and frontage strips specified in sections 84.41 and 84.42 shall apply.

84.41. TABLE B-1

TABLE B-1: AMOUNT OF BUFFER REQUIRED BETWEEN DISTRICTS (feet)

District to Provide Buffer	*District Buffered*										
	AG-1 R-R	*R-1R R-1 R-1A*	*R-2 R-3*	*R-MH*	*C-1*	*C-2*	*C-3*	*M-1*	*M-2*	*H.D.*	*PUD*
AG-1 R-R	0	50	50	0	0	0	0	0	0	50	50
R-1R R-1 R-1A	0	0	0	0	0	0	0	0	0	35	0
R-2 R-3	35	50	50	0	0	0	0	0	0	50	50
R-MH	75	75	75	0	0	0	0	0	0	75	75
C-1	10	10	10	10	0	0	0	0	0	15	10
C-2	15	15	15	15	0	0	0	0	0	15	15
C-3	25	25	25	25	25	25	0	25	25	25	25
M-1	25	25	25	25	10	10	0	0	0	25	25
M-2	25	25	25	25	10	10	0	0	0	25	25
H.D.	0	0	0	0	0	0	0	0	0	0	0
PUD	0	50	0	0	0	0	0	0	0	75	0

84.42. TABLE B-2

TABLE B-2: AMOUNT OF FRONTAGE STRIP REQUIRED (feet)

District to provide frontage strip to arterial or collector street	*Gateway*
R-MH, R-2, and R-3	50
AG-1, R-R, R-1, R-1A, R-1R, C-1, and C-2	10'
C-3, M-1, and M-2	30'

84.5. *Temporary buffers.*

84.51. *Buffer adjacent to land-disturbing activities.* Temporary buffers shall be required for excavation, filling, construction, movement or use activities where provided as a condition of zoning, special use, building permit, conditional use permit, or variance approval.

84.52. *Time constraints.* Temporary buffers shall terminate upon project completion. In the case of a residential subdivision, a construction buffer shall terminate upon each individual lot with the issuance of a certificate of occupancy for the specific dwelling.

84.6. *Variance standards.*

a. In the event the improvements required by section 84 are located within a utility or pipeline easement, a minimum width of no less than 20 feet will be required outside the easement.

b. Requirements may be adjusted in order to observe the sight distance required as a condition of zoning or variance approval or as approved by the zoning enforcement officer.

c. For buildings taller than 35 feet, a plan shall be submitted to the Jones County Board of Commissioners for approval. The board of commissioners may increase the minimum landscaping required by section 84 as a condition for allowing additional height of development.

d. The board of commissioners may also establish or increase the landscaping required by section 84 as a condition of rezoning or conditional use permit.

e. The zoning board of appeals may increase the minimum landscaping required as a condition to granting a variance request.

f. The width of buffers as required in Table B-1 may be reduced by no more than 50 percent, as appropriate, by the board of appeals and adjustments, if, and only if it is clearly demonstrated that existing topography, nonvegetative materials and/or vegetation within the reduced area achieve the purpose and intent of this article.

g. Modifications to frontage strips can only be done with the approval of the zoning enforcement officer. If it is clearly demonstrated that valid topographic reasons require grading which will damage existing mature trees in the frontage strip, relandscaping in accordance with requirements contained in section 84 may be allowed.

84.7. *Grandfathered projects.*

a. This article shall not apply to any portion of a property included within the limits of a valid permitted project issued prior to the effective date of this resolution, provided that all time constraints relating to the permit issued shall be observed. In no event shall any grandfathered project be extended for a greater time period than 12 months.

b. The buffer requirements shall not apply to any existing development unless the zoning of the property is changed or there is a major change in the intensity of the existing use on that lot.

84.8. *Berms.*

a. Berms used as a frontage strip or landscape strip shall conform to the following:

1. All berms shall be landscaped such that a minimum of 30 percent of the raised area is planted with a combination of trees, shrubs, hedging, and

ground covers, with the remainder to be sodded. The berm shall be constructed in a curvilinear manner to present a natural, attractive appearance from the roadway.

2. Landscaped berms shall be no less than five feet higher (combination of both landscaping and earthen berm) than the adjacent parking lot or roadway surface.

3. Hedges shall be augmented by mixed or smaller shrubs as facers, or ground covers planted in curvilinear beds, so as to present an attractive appearance from roadways.

b. Berms used as a buffer along adjacent property lines shall conform to the following:

1. When possible a berm shall be constructed to extend across the common line, except when such a berm obstructs the vision and safety of vehicular or pedestrian traffic or where significant tree save occurs. In such cases, the berm will not be required in the area necessary for vision and safety.

2. Berms erected in this area shall be either straight or curvilinear, and the landscape treatment shall be equal on both sides of the feature. Trees shall be no less than one tree per 25 linear feet of common property.

84.9. *Fences and walls.*

a. Landscaping for fences or walls along roadways or parking lots shall include a ten-foot landscape strip meeting the following guidelines:

1. One flowering tree for each 25 linear feet of strip length shall be provided. Each tree shall be at least six feet in height at time of planting and shall be a species native or suitable to this region.

2. One shrub for each 25 linear feet of strip length shall be provided. Each shrub shall be a species native or suitable to this region.

3. The remaining ground area shall be sodded, seeded or hydroseeded with grass, and/or planted with ground cover species and/or provided with other landscaping material, or any combination thereof.

84.10. *Listing of native trees and shrubs.*

a. *Trees.*

1. *Shade.* Trees noted with an asterisk (*) are recommended for parking lot planting, and shall be two and one-half inches minimum caliper. All shade trees used elsewhere in the project shall be two inches minimum caliper.

Norway Maple*

Armstrong Red Maple (Acer rubrum "Armstrong")*

Red Maple (Acer rubrum) required street tree - 3" caliper required*

Deodar Cedar (Cedrus deodora)

Tulip Poplar (Liriodendron tulipifera)

Sweet Gum (Liquidambar styraciflua)
Southern Magnolia (Magnolia grandiflora)
Sycamore (Platanus occidentalia)
Virginia Pine (Pinus virginiana)
Pin Oak (Quercus palustrus)*
Laurel Oak (Quercus laurifolia)*
Willow Oak (Quercus phellos)*
Bald Cypress (Taxodium distichum)
Chinese Elm (Ulmus parvifolia sempervirens)*

2. *Mid-story and accent:*

American Holly (Illex opaca)
Varieties: East Palatka, Howard
Bradford Pear (Pyrus calleryana "Bradford")
Cherry Laurel (Prunus caroliniana)
Chinese Laurel (Sapium sebiferum)
Crape Myrtle (Lagerstromia indica)
Dogwood (Cornus florida)
Flowering Cherry (Prunus serrulata)
Japanese or Saucer Magnolia (Magnolia soulangiana)
Redbud (Cercis canadensis)
River Birch (Betula nigra)
Wax Myrtle (Myrica cerifera)
Weeping Willow (Salix babylonica)
Yoshino Cherry (Prunus yedoensis)

b. *Shrubs.* All plant material used for hedges and screens shall be planted to create an 80-percent opaque screen at 30 inches of height:

Azalea (Rhododendron indicum)
Burning Bush (Euonymous alatus)
Dwarf Burford Holly (Ilex cornute "Burfordii Nana")
Dwarf Cornuta Holly (Ilex cornuta nana)
Firethorne (Pyracantha coccinea)
Forsythia (Forsythia intermedia)
Fortune's Holly (Osmanthus fortunei)
Heavenly Bamboo (Nandina domestica)
Indian Hawthorn (Raphiolepis indica)
Japanese Holly (Ilex crenata)
Japanese Pittosporum (Pittosporum tobira)

Privet (Ligustrum spp.)

Pfitzer Juniper (Juniperus chinensis "Phitzeriana")

Redtop (Photina glabra) (limited use only)

Sandankwa Viburnum (Viburnum suspensum)

Silver Thorn (Elaeagnus purgens)

Sweet Viburnum (Viburnum odoratissimum)

Yaupon Holly (Ilex vomitoria)

c. *Ground covers:*

Blue Pacific Juniper (Juniperus conferta "Blue Pacific")

Cast Iron Plant (Aspidistra elator)

Confederate Jasmine (Trachelospermum jasminoides)

Day Lily (Hemecocallis spp./single color)

Downy Jasmine (Jasminum multiflorum)

English Ivy (Hedera helix)

Giant Liriope (Liriope muscari "Evergreen Giant")

Lily Turf (Liriope muscari)

Mondo Grass (Ohiopogon japonicus)

Parson's Juniper (Juniperus davurica parsonii)

d. *Grasses:*

Bermuda turf (Cynodon spp.)

Fescue Turf (Fescue spp.)

Centipede Turf (Eremochloa ophiuroides)

Zoysia Turf (Zoysia spp.)

84.11. *Tree protection.*

a. *Planning considerations:* Tree space is the most critical factor in tree protection throughout the development process. The root systems of trees do extend beyond the drip line of the canopy. The root system within the drip line region is generally considered to be the critical root zone. Disturbance within this root zone will directly affect a tree's chances for survival. To protect these trees' critical root zones the following standards shall apply:

1. The use of tree save islands and stands is encouraged. This will facilitate ease in overall site organization as related to tree protection.

2. Tree protection zones for stands or single trees should include an area no less than the total area beneath the tree(s) canopy as defined by the farthest canopy drip line of that tree(s).

3. Layout of the project site utility and grading plans should accommodate the required tree protective zones. Utilities must be placed along corridors between protective zones.
4. Construction site activities such as parking, materials storage, concrete washout, burnhole placement, etc., shall be arranged so as to prevent disturbances within tree protection zones.
5. No disturbances shall occur within the protective zone of stands of trees during construction.

b. *Protective barriers:* Protective tree barriers shall be installed along the outer edge of and completely surrounding the critical root zones of all designated tree protective zones prior to any land disturbances.

1. These barriers will be a minimum of four feet high constructed in a post and rail configuration. Four-foot orange polyethylene laminar safety fencing is also acceptable.
2. Passive forms of tree protection may be utilized to delineate tree save areas which are remote from areas of land disturbance. These areas must be completely surrounded with continuous rope or flagging.
3. All tree protection zones should be designated as such with a "tree save area" sign posted visibly on all sides of the fenced area. These signs are intended to inform subcontractors of the tree protection process. Signs requesting subcontractor cooperation and compliance with tree protection standards are highly recommended for site entrances.
4. All designated tree protection zones must be protected from the sedimentation of erosion material. Type A, B or C silt screening as defined in the "Manual for Erosion and Sedimentation Control in Georgia" shall be installed when necessary along the outer uphill edge of the tree protection zone at the land disturbance interface, and shall remain in place throughout the construction and landscape installation process.

c. *Encroachment:* Most trees can tolerate only a small percentage of critical root zone loss. If encroachment is anticipated within the critical root zones of designated tree protective zones the following preventive measures shall be employed:

1. Where soil compaction might occur due to traffic or material storage the tree protective zone must first be mulched and maintained with a minimum four-inch layer of processed pine bark or wood chips or a six-inch layer of pine straw.
2. The installation of utilities through a protective zone shall occur by way of tunneling rather than trenching. If roots must be cut, proper root pruning procedures must be employed.
3. No fill shall be allowed within the drip line.

4. Where the zoning officer has determined that irreparable damage has occurred to trees within the tree protective zones, the trees must be removed and replaced.

d. *Landmark and historic trees:* The "Georgia Landmark and Historical Tree Register" was established in 1994 by the Georgia Urban Forest Council. The register serves as a record of all the significant trees across the state.

Landmark and historic trees are those individual trees or groups of trees that have been designated as significant on the basis of their importance in national, state, or local history. They possess integrity of location, setting, design, progeny, and represent events, heritage, feeling and association.

Inclusion of a tree or group of trees on the register is used for the protection and preservation of the tree(s). Any tree or group of trees which is included on the "Georgia Landmark and Historical Tree Register" is prohibited from being damaged and may be removed only with prior planning and zoning department approval. If a historic and/or landmark tree is damaged or removed without prior approval, the planning and zoning department will impose a fine equal to $1,000.00 per inch DBH of the damaged or removed tree(s).

1. *Landmark trees:* For a tree or group of trees to be considered landmark for inclusion by the Georgia Urban Forest Council on the "Georgia Landmark and Historical Tree Register" at least one of the following criteria must be satisfied:

   A. The tree(s) is/are commonly recognized as an established and familiar feature of the community or as a significant part of the community's heritage;

   B. The tree(s) must have been planted and maintained for educational purposes for more than 75 years;

   C. The tree(s) was/were planted as a memorial to an individual, group event or cause and is confirmed to be more than 75 years old;

   D. The tree(s) symbolize(s) a historically significant individual, place, event or contribution.

2. *Historical trees:* For a tree or group of trees to be considered a landmark for inclusion by the Georgia Urban Forest Council on the "Georgia Landmark and Historical Tree Register" at least one of the following criteria must be satisfied:

   A. The tree(s) is/are identified with a historically significant individual or group.

   B. The tree(s) is/are located at the site of a historical event and significantly affects one's perception of the event.

   C. The tree(s) date(s) to the time of a historic event at the location of the tree.

D. The tree(s) is/are confirmed as the progeny of a tree that meets any of the criteria.

3. *Hazard trees:* In the event a specimen, historic or landmark tree is determined to be a hazard to property, power lines or people the tree may be removed without recompense or penalty only with prior approval from the zoning enforcement officer.

84.12. *Tree planting specifications.*

a. *Planting:* Trees selected for planting must be free from injury, pests, disease, nutritional disorders or root defects and must be of good vigor in order to assure a reasonable expectation of survivability. Standards for transplanting shall be in keeping with those established in the International Society of Arboriculture publication "Tree and Shrub Transplanting Manual" or similar publication.

b. *Spacing:* No trees may be planted closer than 20 feet.

c. *Utilities:* No street trees other than those species listed herein as small trees may be planted under or within ten lateral feet of any overhead utility wire, or over or within five lateral feet of any underground water line, sewer line, transmission line or other utility.

d. *Distance from curb:* The distance trees may be planted from the curb or curb lines and sidewalks will be no closer than four feet.

84.13. *Maintenance.* All required landscaping shall be maintained in a horticultural healthy and aesthetically pleasing manner.

a. Upon final installation of new trees, shrubs or other landscape material planted to meet the requirements of this resolution, and following acceptance by the zoning enforcement officer in accordance with the procedures in the Jones County Comprehensive Land Development Resolution, the developer shall guarantee all plant materials and provide adequate maintenance of the improvements for a minimum of one year from implementation.

b. Continuing maintenance. The owner, occupant, tenant, and respective agent of each, if any, shall be jointly and severally responsible for the perpetual maintenance and protection of buffers and landscape plantings required by this resolution.

c. Buffers that, over a period of time, lose their screening ability shall be replanted to meet the requirements of this resolution.

d. Replacement trees and landscaping shall be in accordance with the applicable provisions of this resolution.

e. Each owner, lessee, or occupant of any site shall provide for the maintenance and upkeep (lawn care, leaf and trash removal, pruning, fertilizer, etc.) of their parcel at least once a week during the growing season and once every two weeks in the winter.

f. Pruning of trees. Pruning of the center leader or "topping" of any tree is not allowed at any time. If the tree is damaged (whether from a storm or accident), it will be up to the discretion of the zoning enforcement officer as to whether the tree should be replaced or pruned and cared for by a tree surgeon.

g. Pruning of all trees and shrubs shall be done in a manner to protect and enhance the natural character of the plant.

h. Protection of plant material. In locations where plants will be susceptible to injury from pedestrian or motor traffic, said plants shall be protected by appropriate curbs, bollards, tree guards or other effective devices.

i. Irrigation. All flower beds/seasonal color and sodded areas throughout the site shall be provided with an automatic underground irrigation system utilizing pop-up heads where feasible.

j. Swale and erosion control. All areas with slopes steeper than six to one, or areas prone to erosion, shall be sodded or planted with low-maintenance shrubs or ground cover to maintain smooth slopes, and to prevent erosion. Acceptable plant materials shall include approved sod, ground covers, or low-growing shrubs as appropriate. Swales shall have side slopes and back slopes no steeper than three to one.

(Ord. No. 201203-2o, 3-20-2012; Ord. of 9-4-2018)

Section 85. Water resource protection overlay districts.

85.1. *Purpose.* The intent of this section is to establish minimum development standards and criteria which will afford reasonable protection of environmentally sensitive natural resources found throughout the unincorporated area of Jones County. It has been determined that the wise management of these resources as defined in this section is essential to maintaining the health, safety, general welfare and economic well-being of the public.

85.2. *Establishment of water resource overlay districts.* The Jones County Water Resource Overlay Districts shall include the following:

Groundwater recharge area overlay district;

Wetlands protection overlay district;

Water supply watersheds overlay district;

River corridor overlay district.

The boundaries of these water resource districts are shown on a set of maps designated as "water resource districts" and are included as part of the Jones County Official Zoning Maps, which are on file in the zoning administrator's office located in the Jones County Government Center.

85.3. *Definitions.* In addition to the general definitions provided in this resolution, the following definitions shall apply to this section:

A. *Aquifer.* Any stratum or zone of rock beneath the surface of the earth capable of containing or producing water from a well.

B. *Buffer.* A natural or enhanced vegetated area with no or limited minor land disturbances, such as trails and picnic areas, located adjacent to reservoirs or perennial streams within a water supply watershed.

C. *Drastic.* The standardized system for evaluating groundwater pollution potential using the hydrogeologic settings described in the U.S. Environmental Protection Agency Document EPA-600-87-035 (Note: The drastic methodology is the most widely used technique for evaluating pollution susceptibility).

D. *Generalized wetlands map.* The current U.S. Fish and Wildlife Service National Wetlands Inventory Maps for Jones County, Georgia.

E. *Hazardous waste.* Any solid waste which has been defined as a hazardous waste in regulations promulgated by the administrator of the United States Environmental Protection Agency pursuant to the Federal Act, which are in force and effect on February 1, 1988, codified as 40 C.F.R. section 261.3. (Note: This is the same definition as used in the Georgia Hazardous Waste Management Act.)

F. *Impervious surface.* A manmade structure or surface that prevents the infiltration of stormwater into the ground below the structure or surface. Examples are buildings, roads, driveways, parking lots, decks, swimming pools, or patios.

G. *Jurisdictional wetland.* An area that meets the definitional requirements for wetlands as determined by the U.S. Army Corps of Engineers.

H. *Jurisdictional wetland determination.* A delineation of jurisdictional wetland boundaries by the U.S. Army Corps of Engineers as required by section 404 of the Clean Water Act, 33 U.S.C. § 1344, as amended.

I. *Land-disturbing activity.* Any grading, scraping, excavating, or filling of land; clearing of vegetation; and any construction, rebuilding, or alteration of a structure. Land-disturbing activity shall not include activities such as ordinary maintenance and landscaping operations, individual home gardens, yard and grounds upkeep, repairs, additions or minor modifications to a single-family dwelling, or the cutting of firewood for personal use.

J. *Large water supply watershed.* A watershed containing 100 square miles or more of land within the drainage basin upstream of a governmentally owned public drinking water supply intake.

K. *Natural vegetative buffer or buffer area.* A river corridor containing the flora native to that area. The natural floras for specific areas are described in Georgia Geologic

Survey Bulletin 114, the Natural Environments of Georgia. Habitats for endangered and threatened species may require human management of the river corridor in order to maintain those species.

L. *Perennial river.* A river or section of a river that flows continuously throughout the year.

M. *Perennial stream.* A stream that flows throughout the whole year as indicated on a USGS Quad Map.

N. *Pollution susceptibility.* The relative vulnerability of an aquifer to being polluted from spills, discharges, leaks, impoundments, applications of chemicals, injections and other human activities in the recharge area.

O. *Pollution susceptibility map*. The relative vulnerability to pollution prepared by the department of natural resources using the drastic methodology. (Georgia Department of Natural Resources "Hydrologic Atlas 20: Groundwater Pollution Susceptibility Map of Georgia.")

P. *Protected river.* Any perennial river or watercourse with an average annual flow of at least 400 cubic feet per second as determined by appropriate U.S. Geological Survey documents. However, those segments of river covered by the Metropolitan River Protection Act or the Coastal Marshlands Protection Act are specifically excluded from the definition of a protected river.

Q. *Recharge area.* Any portion of the earth's surface where water infiltrates into the ground to replenish an aquifer.

R. *Regulated activity.* Any activity which will or which may reasonably be expected to result in the discharge of dredged or fill material into the waters of the U.S. excepting those activities exempted in section 404 of the Federal Clean Water Act.

S. *Reservoir boundary.* The edge of a water supply reservoir defined by its normal pool level.

T. *Riverbank.* The rising ground, bordering a river, which serves to confine the water to the natural channel during the normal course of flow.

U. *River corridor.* All the land, inclusive of islands, not regulated under the Metropolitan River Protection Act (O.C.G.A. §§ 12-5-440 through 12-5-457), or the Coastal Marshlands Protection Act (O.C.G.A. §§ 12-5-280 through 12-5-293), in areas of a protected river, and being within 100 feet horizontally on both sides of the river as measured from the riverbanks.

The 100-foot buffer shall be measured horizontally from the uppermost part of the riverbanks, usually marked by a break-in slope. Although not within the measured 100-foot wide buffer, the area between the top of the bank and the edge of the river shall be treated by the local governments in the same manner as the river corridor and shall be included within the river corridor protection district.

Because stream channels move due to natural processes such as meandering river-bank erosion and jumping of channels, the river corridor may shift with time. For the purposes of these standards, the river corridor shall be considered to be fixed at its position at the beginning of each review period for the Jones County Comprehensive Plan. Any shift in the location of the protected river after the review period will be shown by revision of the boundaries of the river corridor at the time of the next comprehensive plan review by the department of community affairs.

V. *Sensitive natural area.* Any area, as identified now or hereafter by the department of natural resources, which contains one or more of the following:

1. Habitat, including nesting sites, occupied by rare or endangered species;
2. Rare or exemplary natural communities;
3. Significant landforms, hydroforms, or geological features; or
4. Other areas so designated by the department of natural resources and which are sensitive or vulnerable to physical or biological alteration.

W. *Significant recharge areas.* Those areas mapped by the Georgia Department of Natural Resources in "Hydrologic Atlas 18" (1989 Edition).

X. *Single-family dwelling.* A dwelling structure that is designed for the use of one family.

Y. *Small water supply watershed.* A watershed that contains less than 100 square miles of land within the drainage basin upstream of a governmentally owned public drinking water supply intake.

Z. *Utility.* Public or private water or sewer piping systems, water or sewer pumping stations, electric power lines, fuel pipelines, telephone lines, roads, driveways, bridges, river/lake access facilities, stormwater systems and railroads or other utilities identified by a local government.

AA. *Water resource districts.* A water resource district is a map overlay which imposes a set of requirements in addition to those of the underlying zoning district.

BB. *Water supply reservoir.* A governmentally owned impoundment of water for the primary purpose of providing water to one or more governmentally owned public drinking water systems. This excludes the multipurpose reservoirs owned by the U.S. Army Corps of Engineers.

CC. *Water supply watershed.* The area of land upstream of a governmentally owned public drinking water intake.

DD. *Wetlands.* Those areas inundated or saturated by surface or groundwater at a frequency and duration sufficient to support, and under normal circumstances do support, a prevalence of vegetation typically adapted for life in saturated soil conditions. Wetlands generally include swamps, marshes, bogs and similar areas. The ecological parameters for designating wetlands include hydric soils, hydrological vegetation and hydrological conditions involving a temporary or permanent source of water to cause soil saturation.

85.4. *Groundwater recharge area overlay district.*

85.41. *Findings of fact.* Recharge areas are vulnerable to urban development activities as well as agricultural activities. Pesticides and herbicides sprayed on crops, animal waste, and septic tank effluents contribute to a deterioration in the groundwater quality and can threaten the health of residents relying on well water. Development usually means an increase in the amount of land covered with impervious surfaces. Paving land in recharge areas can alter or impair their recharge characteristics thereby decreasing groundwater supplies.

85.42. *Purpose.* The purpose of this overlay district is to establish criteria to protect significant groundwater recharge areas from pollution by spills, discharges, leaks, impoundments, application of chemicals, injections and other development pressures.

85.43. *District delineation.* The groundwater recharge area overlay district is delineated according to the Georgia Department of Natural Resources' "Most Significant Groundwater Recharge Areas of Georgia Hydrologic Atlas 18" (1989 Edition). Each recharge area shall be determined to have a pollution susceptibility of high, medium, or low based on the "Georgia Pollution Susceptibility Map Atlas 20" (1992 Edition). Said maps are hereby adopted and made a part of this resolution.

85.44. *Permitted uses.* All uses allowed in the underlying zoning districts are permitted in the groundwater recharge area protection overlay district. The following are additional requirements for specific uses:

A. New aboveground chemical or petroleum storage tanks, having a minimum volume of 660 gallons, shall have secondary containment for 110 percent of the volume of such tanks, or 110 percent of the volume of the largest tank in a cluster of tanks. Such tanks used for agricultural purposes are exempt, provided they comply with all federal requirements.

B. New agricultural waste impoundment sites shall be lined if they are within:

1. A high pollution susceptibility area;

2. A medium pollution susceptibility area, and exceed 15 acre-feet in size; and

3. A low pollution susceptibility area, and exceed 50 acre-feet in size. As a minimum, the liner shall be constructed of compacted clay having a thickness of one foot and a vertical hydraulic conductivity of less than five x ten - seven cm/sec or other criteria established by the National Resource and Conservation Service.

C. New homes served by septic tank/drain field systems shall be on lots having the following minimum size limitations as identified on Table MT-1 of the department of human resources' "Manual for On-Site Sewage Management Systems" (hereafter DHR Table MT-1). The minimum set forth in Table MT-1 may be increased

further, based on consideration of other factors (set forth in sections A—F) of the DHR manual. The minimum lot size specified by this section shall not be less than the minimum lot size specified in section 81 of the resolution.

1. One hundred fifty percent of the subdivision minimum lot size calculated based on application of DHR Table MT-1, if they are within a high pollution susceptibility area;
2. One hundred twenty-five percent of the subdivision minimum lot size calculated based on application of DHR Table MT-1, if they are within a medium pollution susceptibility area;
3. One hundred ten percent of the subdivision minimum lot size calculated based on application of DHR Table MT-1, if they are within a low pollution susceptibility area.

D. New manufactured home parks served by septic tank/drain field systems shall have lots or spaces having the following size limitation as identified on Table MT-2 of the department of human resources' (DHR) "Manual for On-Site Sewage Management Systems" (hereafter DHR Table MT-2). The minimums set forth in Table MT-2 may be increased further, based on consideration of other factors (set forth in sections A—F) of the DHR manual.

1. One hundred fifty percent of the subdivision minimum lot or space size calculated based on application of DHR Table MT-2, if they are within a high pollution susceptibility area;
2. One hundred twenty-five percent of the subdivision minimum lot or space size calculated based on application of DHR Table MT-2, if they are within a medium pollution susceptibility area; and
3. One hundred ten percent of the subdivision minimum lot size or space size calculated based on application of DHR Table MT-2, if they are within a low pollution susceptibility area.

E. No construction may proceed on a building or manufactured home to be served by a septic tank unless the Jones County Health Department first approves the proposed septic tank installation as meeting the requirements of the Georgia Department of Human Resources' "Manual for On-Site Sewage Management" (hereinafter DHR manual and subsections C. and D., above.

F. New facilities which handle hazardous materials (of the types listed in section 312 of the Resource Conservation and Recovery Act of 1976, excluding underground storage tanks), and in amounts of 10,000 pounds or more on any one day shall perform their operations on impervious surfaces and in conformance with any applicable federal spill prevention requirements and any local fire prevention code requirements.

G. Permanent stormwater infiltration basins shall not be constructed in areas having high pollution susceptibility.

Table MT-1: New Homes

Minimum Lot Sizes, Minimum Lot Widths, and Maximum Allowable Sewage Flow for the Type of Water Supply System

The minimum lot size specified by this section shall not be less than the minimum lot size specified in section 81 of the resolution.

Type of Water Supply System		
	Non-Public (Individual)*	*Public*
Minimum lot size	43,560 square feet	21,780 square feet
Minimum lot width	150 feet	100 feet
Maximum sewage flow	600 gpad**	1,200 gpad

* In this context, "non-public" means an individual water supply system, or any other water supply system which is not a "public" water supply system.

** Gpad = gallons per acre per day = gal/acre/day.

Table MT-2: Manufactured Home Parks

Minimum Lot Sizes, Minimum Lot Widths, and Maximum Allowable Sewage Flow for the Type of Water Supply System

The minimum lot size specified by this section shall not be less than the minimum lot size specified in section 81 of the resolution.

Type of Water Supply System		
	Non-Public (Individual)*	*Public*
Minimum lot size	43,560 square feet	21,780 square feet
Minimum lot width	150 feet	100 feet
Maximum sewage flow	600 gpad**	1,200 gpad

* In this context, "non-public" means an individual water supply system, or any other water supply system which is not a "public" water supply system.

** Gpad = gallons per acre per day = gal/acre/day.

Notes to tables:

Section A. The above minimum lot sizes are for the typical sized home (three or four bedroom) with basic appurtenances such as driveway, minimum number of trees, and water supply line. If larger homes, swimming pools, tennis courts or outbuildings, etc., are proposed for construction, or if trees would interfere with installation of an on-site sewage management system, the Jones County Board of Health will require larger lots to assure usable soil area.

Section B. The Jones County Board of Health may also require larger lot sizes when physical factors indicate the need to do so. These factors include, but are not limited to: the availability of sufficient unobstructed land areas for an approved on-site sewage

management system and approved replacement system, slope greater than five percent, percolation rates higher than 45 minutes per inch, the need for subsurface drainage, or adverse topographic features.

Section C. Lots shall be a minimum width of 100 feet or 150 feet measured within the area where an approved on-site sewage management system and replacement system are to be located when served by a public water supply system or nonpublic water supply system, respectively.

Section D. The following land areas are not considered as a part of a lot when calculating the required minimum lot size: right-of-way of roads, easements (such as power line or pipe line) that exclude installation of an on-site sewage management system, bodies of water, land within 50 feet of a lake, river, stream, wetland or other body of water, and similar limiting factors.

Section E. There must be an unobstructed area on each lot for installation of an approved on-site sewage management system, and an area equal in size for a conventional system, or larger area, as appropriate, for an approved replacement system; this will include sufficient area for necessary site modifications for installation of both the initial system and a replacement system. All pertinent county zoning setbacks and other space requirements must also be met.

Section F. The maximum daily sewage flow for each lot or parcel of land shall not exceed 600 gpad when served by a nonpublic or individual water supply system, or 1,200 gpad when served by a public water supply system. When sewage flows exceed these quantities (600 or 1,200 gpad as indicated) for a given dwelling structure, the minimum lot size or parcel of land shall be increased proportionally. Example: Assume a public water supply exists (so 1,200 gpad maximum sewage flow allowed per minimum required land area of 21,780 square feet), and there is a proposed sewage flow of 5,000 gpad. To determine the square footage of the lot needed (X), use the following formula:

X = 5,000 gal/day

1,200 gal/acre/day

= 4.17 acres

= 4.17 acres x 43,560 ft^2/acre

= 181,500 ft^2 area of land needed.

Likewise, for a nonpublic (individual) water supply, to determine the square footage of the lot needed (Y), for a proposed sewage flow of 5,000 gpad, use the following formula:

Y = 5,000 gal/day

600 gal/acre/day

= 8.33 acres

= 8.33 acres x 43,560 ft^2/acre

= 363,000 ft^2 area of land needed.

85.45. *Exemptions.* Any lot of record approved prior to the adoption of this resolution is exempt from the minimum lot size requirements contained in section 85.44.C. and D.

85.5. *Wetlands protection overlay district.*

85.51. *Findings of fact.* The wetlands within Jones County are indispensable and fragile natural resources with significant development constraints due to flooding, erosion and soil limitations. In their natural state, wetlands serve man and nature. They provide habitat areas for fish, wildlife and vegetation; water quality maintenance and pollution control; flood control; natural resource education; scientific study, and recreational opportunities.

85.52. *Purpose.* The purpose of this overlay district is to promote the wise use of wetlands, and protect them from alterations which will significantly affect or reduce the primary functions for water quality, floodplain and erosion control, groundwater recharge, aesthetic natural areas and wildlife habitat areas.

85.53. *District delineation.* The wetlands protection overlay district is hereby established, which shall correspond to all lands within the jurisdiction of Jones County, Georgia that are mapped as wetland areas by the U.S. Fish and Wildlife National Wetlands Inventory Maps. This map shall be referred to as the generalized wetlands map and is hereby adopted by reference and declared to be part of this resolution, together with all explanatory matter thereon as attached thereto.

The generalized wetlands map does not represent the boundaries of jurisdictional wetlands within Jones County and cannot serve as a substitute for a delineation of wetland boundaries by the U.S. Army Corps of Engineers, as required by section 404 of the Clean Water Act, as amended. Any local government action under this resolution does not relieve the landowner from federal or state permitting requirements.

85.54. *Wetland development permit requirements.* No regulated activity or use, except those identified in section 85.55, shall be allowed within the wetland overlay district without a development permit from Jones County. If the area proposed for development is located within 50 feet of a wetlands protection overlay district boundary as determined by the zoning enforcement officer using the generalized wetlands map, a U.S. Army Corps of Engineers determination shall be required. If the Corps determines that wetlands are present on the proposed development site, the development permit will not be granted until a section 404 permit or letter of permission is issued.

85.55. *Permitted uses.* The following uses are permitted by right within the wetland protection overlay district to the extent they are not prohibited by any other ordinance or law, and provided they do not require structures, grading, fill, draining or dredging as provided herein. (The activities listed in this section are exempted from section 404 Regulations [of the Clean Water Act], provided they do not have impacts on a navigable

waterway that would necessitate acquisition of an individual 404 permit. However, under section 10 of the Rivers and Harbors Act, a permit may be required in some circumstances.)

A. Forestry practices applied in accordance with best management practices approved by the Georgia Forestry Commission, and as specified in section 404 of the Clean Water Act.

B. Conservation or preservation of soil, water, vegetation, fish or other wildlife, provided it does not affect waters of the State of Georgia or of the United States in such a way that would require an individual 404 permit.

C. Outdoor passive recreational activities, including fishing, bird watching, hiking, boating, horseback riding and canoeing.

D. The cultivation of agricultural crops. Agricultural activities shall be subject to best management practices approved by the Georgia Department of Agriculture.

E. The pasturing of livestock, provided that riparian wetlands are protected; that soil profiles are not disturbed; and that approved agricultural best management practices are followed.

F. Education, scientific research and nature trails.

85.56. *Prohibited uses.* The following uses are prohibited in a wetland district:

A. Receiving areas for toxic or hazardous waste or other contaminants.

B. Hazardous or sanitary landfills.

85.6. *Water supply watershed protection overlay district.*

85.61. *Purpose.* In order to provide for the health, safety, and welfare of the public and a healthy economic climate within Jones County and surrounding communities, it is essential that the quality of public drinking water be assured. The ability of natural systems to filter stormwater runoff can be threatened by unrestricted development. Land-disturbing activities associated with development can increase erosion and sedimentation that threatens the storage capacity of reservoirs. In addition, stormwater runoff, particularly from impervious surfaces, can introduce toxins, nutrients and sediment into drinking water supplies, making water treatment more complicated and expensive and rendering water resources unusable for recreation. Industrial land uses that involve the manufacture, use, transport, and storage of hazardous or toxic waste materials result in the potential risk of contamination of nearby public drinking water supplies.

The purpose of this resolution is to establish measures to protect the quality and quantity of the present and future water supply of Jones County; to minimize the transport of pollutants and sediment to the water supply; and to maintain the yield of the water supply watershed. This resolution shall apply to all existing and proposed water supply watersheds within Jones County.

85.62. *Establishment of water supply watershed overlay district.* The Ocmulgee and Town Creek Water Supply Watershed Overlay Districts are hereby designated and shall comprise the land that drains to the Ocmulgee and Town Creek water supply intakes and Town Creek Water Supply Reservoir. The boundaries of these overlays are defined by the ridgelines of the respective watersheds and the boundary of a radius of seven miles upstream of the respective public water supply intakes or reservoirs. These overlays shall be further delineated and defined on the Water Supply Watershed Protection District Overlay Map of Jones County. The map is hereby incorporated into and made a part of this resolution by reference.

The following water supply watershed districts and reservoirs are hereby defined, and the boundaries shall be identified on the water supply watershed district overlay map:

(1) The Ocmulgee Watershed is a large water supply watershed. An intake from which the water is pumped and transported to the Town Creek Reservoir is located on this river. This water supply watershed does not contain a reservoir.

(2) The Town Creek Watershed is a small water supply watershed. An intake for Macon-Bibb County is located on this creek. This water supply watershed contains a reservoir that is located in unincorporated Jones County. The Macon Water Authority has a reservoir management plan in place.

(3) Town Creek Reservoir: The normal pool level elevation at contour line (E1.375).

85.63. *Protection criteria.* The following regulations shall apply to the Ocmulgee Water Supply Watershed identified on the adopted map as a large water supply watershed without a reservoir:

A. New facilities, located within seven miles of a water supply intake or water supply reservoir, which handle hazardous materials of the types listed in section 312 of the Resource Conservation and Recovery Act of 1976 (excluding underground storage tanks), and amounts of 10,000 pounds or more on any one day, shall perform their operations on impervious surfaces, and in conformance with any applicable federal spill prevention requirements, or the requirements of the Standard Fire Prevention Code.

The following regulations shall apply to the Town Creek Water Supply Watershed identified on the adopted map as a small water supply watershed with a reservoir known as the Town Creek Reservoir:

A. The corridors of all perennial streams within a seven-mile radius upstream of a governmentally owned public drinking water supply intake or water supply reservoir must be protected by the following criteria:

1. A buffer shall be maintained for a distance of 100 feet on both sides of the stream as measured from the stream banks.

2. No impervious surface shall be constructed within a 150-foot setback area on both sides of the stream as measured from the stream banks.

3. Septic tanks and septic tank drainfields are prohibited in the 150-foot setback area as described in [paragraph] A.2. above.

B. The corridors of all perennial streams outside a seven-mile radius upstream of a governmentally owned public drinking water supply intake or water supply reservoir must be protected by the following criteria:

1. A buffer shall be maintained for a distance of 50 feet on both sides of the stream as measured from the stream banks.
2. No impervious surface shall be constructed within a 75-foot setback area on both sides of the stream as measured from the stream banks.
3. Septic tanks and septic tank drainfields are prohibited in the 75-foot setback area as described in [paragraph] B.2. above.

C. The impervious surface area, including all public and private structures, utilities, or facilities of the entire water supply watershed shall be limited to 25 percent, or existing use, whichever is greater.

D. New facilities which handle hazardous materials of the types listed in section 312 of the Resource Conservation and Recovery Act of 1976 (excluding underground storage tanks) and amounts of 10,000 pounds or more on any one day, shall perform their operations on impervious surfaces and in conformance with any applicable federal spill prevention requirements, or the requirements of the Standard Fire Prevention Code.

E. The Town Creek Reservoir is owned by the Macon Water Authority and will be protected as described in the Town Creek Reservoir Management Plan.

85.64. *Exemptions.* The following uses shall be exempted:

A. Land uses existing prior to the adoption of this resolution.

B. Mining activities permitted by the department of natural resources under the Surface Mining Act.

C. Utilities from the stream corridor buffer and setback area provisions in accordance with the following conditions if the utilities to be located in the buffer or setback areas cannot feasibly be located outside these areas:

1. The utilities shall be located as far from the stream bank as reasonably possible.
2. The installation and maintenance of the utilities shall be such to protect the integrity of the buffer and setback areas as best as reasonably possible.
3. The utilities shall not impair the quality of the drinking water stream.

D. Specific forestry and agricultural activities in the stream corridor buffer and setback areas shall be in accordance with the following conditions:

1. The activity shall be consistent with best management practices established by the Georgia Forestry Commission or the Georgia Department of Agriculture.

2. The activity shall not impair the quality of the drinking water stream.

85.7. *River corridor protection overlay district.*

85.71. *Purpose.* River corridors are the strips of land that flank major rivers in Georgia. These corridors are of vital importance to Georgia in that they help preserve those qualities that make a river suitable as a habitat for wildlife, a site for recreation, and a source for clean drinking water. River corridors also allow the free movement of wildlife from area to area within the state, help control erosion and river sedimentation, and help absorb floodwaters.

The Ocmulgee River has been designated as a protected river by the State of Georgia. The purpose of this resolution is to establish measures to guide future growth and development in the areas adjacent to the Ocmulgee River as defined herein.

85.72. *Establishment of Ocmulgee River Corridor Protection Overlay District.* The Ocmulgee River Corridor Protection Overlay District is hereby designated and shall comprise all land, inclusive of islands, in areas of the Ocmulgee River within Jones County and being within 100 feet horizontally on the eastern side of the river as measured from the riverbanks. Also included is the area between the top of the bank and the edge of the river although this strip of land is not included as part of the 100-foot buffer requirement contained in the minimum standards. This district shall be further defined and delineated on the Ocmulgee River Corridor Protection District Overlay Map. The map is hereby incorporated into and made a part of this resolution by reference.

85.73. *Protection criteria.*

A. Construction within the buffer area is prohibited except as provided herein.

B. A natural vegetative buffer shall be maintained at all times in the river corridor, except as otherwise provided herein.

C. The natural vegetative buffer shall be restored as quickly as possible following any land-disturbing activity.

D. Septic tank and septic tank drainfields are prohibited in the river corridor, except as expressly provided in section 85.73.E. of this resolution.

E. Single-family dwellings including the usual appurtenances are permitted in the buffer area subject to the following conditions:

1. The dwelling shall be in compliance with all local zoning regulations.

2. The dwelling shall be located on a tract of land containing at least two acres. For the purposes of these standards, the size of the tract of the land shall not include any area that lies within the protected river (that is, for tracts of land that include portions of a protected river, the area between the riverbanks cannot be counted toward the two-acre minimum size).

3. There shall be only one such dwelling on each two acre or larger tract of land.

4. A septic tank or tanks serving such a dwelling may be located within the buffer area.

5. Septic tank drainfields shall not be located within the buffer area.

F. Industrial and commercial land uses existing in the river corridor prior to the promulgation of this resolution are exempt from the criteria contained herein, provided that:

1. These uses do not impair the drinking quality of the river water.

2. These uses meet all state and federal environmental rules and regulations.

G. The construction of road crossings and utility crossings is permitted in the river corridor, provided such construction meets all requirements of the Erosion and Sedimentation Control Act of 1975, and all applicable local ordinances on soil erosion and sedimentation control.

H. The following uses are permitted in the river corridor, provided that such uses do not impair the long-term functions of the protected river or the river corridor:

1. Timber production and harvesting, subject to the following conditions:

(a) Forestry activity shall be consistent with best management practices established by the Georgia Forestry Commission; and

(b) Forestry activity shall not impair the drinking quality of the river water as defined by the Federal Clean Water Act, as amended.

2. Wildlife and fisheries management activities consistent with the purposes of O.C.G.A. § 12-2-8.

3. Wastewater treatment.

4. Recreational usage consistent either with the maintenance of a natural vegetative buffer or with river-dependent recreation. For example, a boat ramp would be consistent with this criterion but a hard-surfaced tennis court would not. Parking lots are not consistent with this criterion. Paths and walkways within the river corridor are consistent with this criterion.

5. Natural water quality treatment or purification.

6. Agricultural production and management, subject to the following conditions:

(a) Agricultural activity shall be consistent with best management practices established by the Georgia Soil and Water Conservation Commission;

(b) Agricultural activity shall not impair the drinking quality of the river water as defined by the Federal Clean Water Act, as amended; and

(c) Agricultural activity shall be consistent with all state and federal laws, and all regulations promulgated by the Georgia Department of Agriculture.

7. Other uses permitted by the department of natural resources or under section 404 of the Clean Water Act.

I. Handling areas for the receiving and storage of hazardous waste are prohibited within the river corridor.

J. Hazardous waste or solid waste landfills are prohibited within the river corridor.

K. The standards and requirements of this resolution do not supersede those contained in the Metropolitan River Protection Act, the Coastal Marshlands Protection Act, and the Erosion and Sedimentation Act.

85.74. *Exemptions.* The following uses are exempted from the river corridor protection plan:

A. Land uses existing prior to the promulgation of the Ocmulgee River Corridor Overlay District. For the purposes of this resolution, a preexisting use is defined as any land use or land-disturbing activity, including all human endeavors directly associated with such use or activity, which, prior to the promulgation of this resolution, falls within one of the following categories (see section 85.73.F. for additional regulations governing preexisting industrial and commercial uses):

1. Is completed;
2. Is under construction;
3. Is fully approved by the governing authority;
4. All materials have been submitted for approval by the governing authority; or
5. Is zoned for such use and expenditures in excess of $2,500.00 have been made in preparation for construction in accordance with such zoning.

B. Mining activities, if permitted by the department of natural resources pursuant to the Georgia Surface Mining Act of 1968, as amended.

C. Utilities (except as discussed above in section 85.73.G.), if such utilities cannot feasibly be located outside the buffer area (feasibility shall be decided conservatively by the local government), provided that:

1. The utilities shall be located as far from the riverbank as reasonably possible;
2. Installation and maintenance of the utilities shall be such as to protect the integrity of the buffer area as well as is reasonably possible; and
3. Utilities shall not impair the drinking quality of the river water.

D. Specific forestry and agricultural activities, except as discussed above in subsections 85.73.H.1. and 85.73.H.6. above.

(Ord. No. 201203-2o, 3-20-2012)

Section 86. Bypass design overlay district.

86.1. *Purpose and intent.* To guide future development along the North Gray Bypass through unincorporated Jones County, the board of commissioners implements the bypass design overlay (BDO) district zoning ordinance for the following several purposes:

- To help create a sense of place for the county that will enhance the existing architecture in the county and will differentiate Jones County from other communities in the area.
- To preserve the aesthetic appeal of the county by proactively conserving greenspace and foliage, while sustaining the visual attractiveness of development to match the character of the county.
- To improve gateways and corridors leading into central Jones County and the City of Gray for the purpose of enhancing directional wayfinding.
- To promote the cultural heritage of the county and stimulate the tourism economy.
- To provide for enhanced safety and to ensure the effective movement of people and goods throughout the county.

86.2. *Definitions.*

(1) *Certificate of design review:* A document, required prior to a building permit, approving an application to make an alteration or a material change in the appearance of a property or of a structure, site, or work-of-art located in a designated overlay district.

(2) *Design review board:* Reviews the architectural and site planning considerations and improvements proposed within the overlay district.

(3) *Exterior architectural feature:* The architectural style, general design, and general arrangement of the exterior of a structure, including but not limited to, the texture of the building material, the type and style of all windows, doors, and signs, and other related architectural fixtures, features, details, or elements.

(4) *Material change in appearance:* The construction of a new structure, or a change that will affect the exterior architectural features of any structure, site, or work-of-art within a designated overlay district. Ordinary maintenance or repair of any exterior architectural feature in or on a structure that does not involve a change in design, is not a "material change in appearance." Material change in appearance includes without limitation any one or more of the following:

- A reconstruction or alteration of the size, shape, or facade of a structure, including without limitation, relocation of any doors or windows, or removal or alteration of any architectural features, details, or elements;

- Demolition of a structure;
- Relocation of a structure within the BDO district or from a location outside the BDO district to a location within the BDO district;
- Commencement of excavation, grading or site improvement;
- A change in the location of advertising visible from the public way on the property; or
- The erection, alteration, restoration, or removal of any structure within the BDO district, including walls, fences, steps, and pavements, or other related features.

(5) *Ordinary repair and maintenance:* Work done to prevent deterioration or to replace parts of a building, structure, sign or exterior architectural feature with equivalent materials in order to correct any deterioration, decay of or damage to any such building, structure, sign or exterior architectural feature. Ordinary maintenance or repair work shall not exceed 25 percent of the structure's assessed value in any 24 consecutive month period.

86.3. *Establishment of district.* The following overlay district, bypass design overlay, is hereby established in the county. Regulations of the BDO shall apply to every parcel located in unincorporated Jones County within 500 feet of the right-of-way of the North Gray Bypass. If any part of the parcel is within the 500-foot buffer, the entire parcel must conform. An official zoning map shall be maintained, which shall designate which properties are included in this district.

86.4. *Relationship to underlying zoning regulations.* The existing zoning map and underlying zoning regulations governing all properties within the bypass design overlay district shall remain in full force and effect. The special regulations contained within this chapter shall be overlaid upon, and shall be imposed in addition to the requirements of the zoning district within which a specific property is located.

86.4.1 Except where it is otherwise explicitly provided; whenever the overlay district standards conflict with standards that would otherwise apply under this zoning ordinance, the regulations of the overlay zoning district govern.

86.4.2 All uses that are permitted in the underlying zoning district(s) shall be permitted in the bypass design overlay district.

86.4.3 When a nonconforming use is abandoned or discontinued for a period of 60 calendar days, any subsequent use of the property thereafter must comply with the applicable regulations of the county zoning ordinance regarding the use of the property.

86.5. *Conformance with design guidelines.* Development and construction activity within the bypass design overlay district must conform to the county design guidelines manual.

86.6 *Applicability.*

86.6.1 All new development of property within the BDO shall conform to the standards and guidelines adopted for this district, regardless of any change in ownership.

86.6.2 Any material change in appearance of property or addition of a new exterior architectural feature within the BDO shall conform to the standards and guidelines adopted for this district, regardless of any change in ownership.

86.6.3 Ordinary repair and maintenance of any structure or property within the BDO district shall be permissible in all circumstances, and shall not require or trigger formal compliance with the standards and guidelines for this district.

86.6.4 Any structure or property existing in the BDO district at the time of the approval of this section shall not, in their current condition, be affected by any of the standards or guidelines adopted for this district. Future improvements to any property within the BDO district shall be reviewed for compliance with the applicable guidelines; however, only the proposed improvements shall be reviewed.

86.6.5 To ensure that development and redevelopment within the BDO areas are consistent with the objectives of this section, each project, not otherwise exempted by this section, is required to undergo a project review by the design review board prior to the issuance of building permits by Jones County. The review requirements are outlined in section 86.7, et. seq.

86.6.6 Single-family dwellings, agricultural structures, and any accessory buildings of single-family dwellings or agricultural structures shall be exempt from any and all requirements of this section, provided that the aforementioned structure does not lie within 200 feet of the right-of-way of the North Gray Bypass.

86.7 *Design review board.*

86.7.1 A design review board is hereby established for the purpose of reviewing proposed improvements within the board's area of jurisdiction. The design review board shall consist of five voting members, each of whom shall serve for terms of four years, with initial terms being staggered. A member may serve a maximum of two consecutive terms. All design review board members shall serve without compensation.

Members must be residents or property owners within the county and must be qualified based on demonstrated interest or experience in design, urban design, architecture, historic preservation, architectural history, planning, landscape design, development, real estate or related fields. Each commissioner shall nominate an individual for consideration, and the full commission shall vote on their approval. In case any vacancy should occur for any cause, the county commission chairman shall fill such vacancy by making an appointment

for the unexpired term with the approval of the full commission. The commission may also vote to designate the county planning commission to fulfill the role of design review board.

86.7.2 The design review board shall have countywide jurisdiction in any specially designated overlay district where the county design guidelines manual has been instituted to govern the appearance and siting of property and structures.

86.7.3 The design review board shall adopt rules of procedure as are necessary to carry out the purposes of its authority. All meetings shall be open to the public. The board shall appoint a secretary to keep a record and minutes of its proceedings, showing the action of each member upon each question. The design review board shall keep records of its examinations and other official actions, all of which shall be filed with the county clerk. The zoning enforcement officer shall serve as the advisor to the design review board.

86.7.4 The design review board is authorized to receive, consider, approve, approve with conditions, or deny applications for design review as required by this ordinance. In granting approval of design review, the design review board may impose such requirements and conditions with respect to the location, construction, maintenance and operation of any use or building, in addition to those expressly set forth herein, as may be deemed necessary for the protection of adjacent properties and the public interest. Decisions of the design review board shall be final unless an appeal is filed. All appeals shall be considered in a manner consistent with section 115 of the Jones County CLDR.

86.7.5 Within a designated overlay district, no material change in appearance shall be made and no building permit issued unless a certificate of design review (certificate) has been granted by the design review board. Such material changes shall conform to all of the requirements as specified in the county design guidelines manual. Work not in compliance with a certificate of design review is prohibited.

86.7.6 Property owners may perform routine maintenance activities without obtaining a certificate of design review. Routine maintenance activities are those which are fairly narrow in scope, and exclude any material change in appearance of property or addition of a new exterior architectural feature. The county design guidelines manual should be consulted for additional information about routine maintenance activities.

86.7.7 Certificate of design review application requirements and process.

86.7.7.1 Applications for design review approval shall be made as required by the zoning enforcement officer and shall, at minimum, contain the following information:

(a) *Elevation drawings and color, and material samples.* Every application or review, not otherwise exempt, involving the construction of a new building or structure and alterations and/or additions to existing

structures shall be accompanied by exterior elevation drawings drawn to scale, signed by an architect, engineer or other appropriate professional, and submitted in sufficient number of copies as required by the zoning enforcement officer. Said exterior elevation drawings shall clearly show, in sufficient detail the exterior appearance and architectural design of proposed change(s) to buildings or structures and new construction, as applicable. Each application shall also indicate proposed materials, textures and colors, and provide samples of materials and colors.

(b) *Photographs.* All applications shall be accompanied by photographs of all sides of the existing building(s) or structure(s) affected, and of adjoining properties. Photographs shall be submitted in printed copy and in digital form unless otherwise specified by the zoning enforcement officer.

(c) *Site plan and landscaping plan.* For every application, a plot plan or site plan drawn to scale shall be submitted which shows all improvements affecting appearances, such as walls, walks, terraces, plantings, tree protection areas, accessory buildings, signs, lights, and other elements.

(d) *Fee.* A fee, if required by the county commission, shall be submitted for said application.

(e) *Additional information.* Any additional information, as may reasonably be required by the zoning enforcement officer, shall be submitted with the application.

86.7.7.2 Any applicant shall have the opportunity to request a preliminary review for the purpose of gathering information and informal feedback from the design review board. The board may suggest revisions that enable the preliminary plan to conform to the design guidelines manual, but shall not issue a final ruling granting approval or denial to the applicant. Applicants are not required to have submitted an application for a certificate of design review prior to a preliminary hearing. The design review board reserves the final right to either permit or deny a preliminary hearing.

86.7.7.3 All final certificate of design review applications shall be submitted to the zoning enforcement officer who shall review the application for completeness. Following the certification of completeness, the application shall be considered at the next design review board meeting, to be held between ten and 60 calendar days from the date upon which the application is certified as complete.

86.7.8 Decisions on applications for certificates of design review.

86.7.8.1 Upon completion of the final review, the design review board shall direct the zoning enforcement officer to issue a certificate of design review if it finds the proposed change(s) in appearance would not have a

substantial adverse effect on the appearance and character of the overlay district. The design review board shall consider the appropriateness of any proposed material change in appearance in the context of the following criteria:

(a) Consistency with the county design guidelines manual for the type of development and/or its proposed.

(b) The nature and character of the surrounding areas, and the consistency and compatibility of the proposed application with such nature and character.

(c) The general design, the character and appropriateness of design, scale of buildings, arrangement, materials, texture and colors (non-painted surfaces), of the structure in question and the relation of such elements to similar features of structures in the immediate surrounding area, site and landscaping.

(d) Whether the proposed design includes defects such as: character foreign to the area, arresting and spectacular effects, a multiplicity or incongruity of details resulting in a restless and disturbing appearance, and the absence of unity and coherence in composition not in consonance with the density and character of the present structure(s) or surrounding area,

(e) The interior arrangement or use, provided it has no effect on exterior architectural features, safety, or utility, shall not be considered.

86.7.8.2 If an application is approved, the design review board shall issue a certificate of design review to the applicant for the proposed work on the property. The zoning enforcement officer or his/her designee shall ensure the applicant's compliance with the certificate of design review after the work has been completed.

86.7.8.3 The design review board shall deny a certificate of design review if it finds the material change in appearance would have a substantial adverse effect on the overlay district. If an application is denied, the design review board will notify the applicant, in writing, of its decision and state the reason(s) for the denial. Modifications or alternatives to the proposed project should be included, and applicants are strongly encouraged to discuss such modifications with the design review board. The applicant may resubmit a new or revised application for consideration. The denial of a certificate of design review shall be binding, and no building permit shall be issued.

86.7.8.4 The design review board shall approve, approve with conditions, or deny an application for a certificate of design review within 90 calendar days after the completed application is filed with the zoning enforcement

officer. Failure of the design review board to act within the allotted time shall be deemed an approval of the application and no further compliance steps shall be necessary.

86.7.9 All changes to existing buildings and proposed new construction shall conform to the certificate of design review issued for the project. In the event work is not performed in accordance with such certificate, the zoning enforcement officer shall issue a stop-work order.

86.7.10 An approved certificate of design review shall be valid for 18 months, after which time it shall expire. Upon expiration, a new application must be submitted and a new certificate of design review must be issued by the design review board prior to commencement of any construction or building modifications.

86.8. *Amendments.* Amendments to the BDO district will follow all processes and regulations pursuant to article XV of the Jones County CLDR.

(Ord. No. 201601-2o, 1-5-2016)

ARTICLE IX. SPECIAL PROVISIONS

Section 91. Manufactured (mobile) homes and manufactured home parks.

The following regulations shall apply to all manufactured (mobile) homes and to all manufactured home parks within the unincorporated area of Jones County.

91.1. *Classification of manufactured homes.* All manufactured homes are hereby placed into one of the following classifications:

91.11. Type A manufactured homes are manufactured or mobile homes constructed to meet or exceed the construction standards promulgated by the U.S. Department of Housing and Urban Development that were in effect at the time of construction and satisfy each of the following additional criteria:

(1) The home has a width at its narrowest point, when placed on site, of at least 18 feet.

(2) The pitch of the home's roof has a minimum vertical rise of three feet for each 12 feet of horizontal run, and the roof is finished with a type of shingle that is commonly used in standard residential construction.

(3) The exterior siding consists of wood, hardboard, vinyl, or aluminum, which may be vinyl coated or painted, but in no case exceeding the reflectivity of gloss white paint, comparable in composition, appearance, and durability to the exterior siding commonly used in standard residential construction.

91.12. Type B manufactured homes are manufactured or mobile homes constructed to meet or exceed the construction standards promulgated by the U.S. Department of Housing and Urban Development that were in effect at the time of construction, but that do not satisfy the criteria necessary to qualify the home as a Type A manufactured home.

91.13. Type C manufactured homes are manufactured homes that do not meet the definitional criteria of a Type A or Type B manufactured home.

91.2. *General standards for manufactured home parks.* When allowed as a permitted or conditional use, all manufactured home parks shall be subject to the following regulations:

91.21. The minimum lot area per park shall be five acres, and the minimum lot width for the portion used for entrance and exit and any portion used for manufactured home spaces or stands shall be 50 feet. No occupancy shall be permitted before ten spaces or stands are completed and ready for occupancy. All manufactured or mobile homes within manufactured home parks shall be required to meet any other applicable local, state, or federal construction or use requirements, and no home not meeting these requirements shall be admitted into a manufactured home park.

91.22. Each manufactured home space or stand shall meet the following requirements:

(1) Minimum size shall be 6,000 square feet.

(2) Minimum width of space shall be 50 feet.

(3) Minimum front yard shall be 20 feet, minimum side yard shall be ten feet, and minimum rear yard shall be ten feet.

(4) No manufactured home shall be located any closer than 20 feet to any roadway within the park, nor any closer than 35 feet to any property line.

(5) No space shall be rented for residential use except for a period of 30 days or more.

91.23. Convenience establishments of a commercial nature, including stores, laundry and dry cleaning pickup establishments, self-service laundries, and beauty and barber shops shall be permitted in manufactured home parks, provided that these establishments and associated parking areas meet the following requirements:

91.23.1. Such uses shall not occupy more than ten percent of the area of the park.

91.23.2. Such uses shall be subordinate to the residential use and character of the park.

91.23.3. Such uses shall be located, designated, and intended to serve the frequent trade or service needs of persons residing in the park.

91.23.4. Such uses shall present no visible evidence of their commercial character from any portion of any residential district outside the park.

91.24. The following minimum standards shall apply to streets within all manufactured home parks:

(1) Streets shall be provided on the site where necessary to furnish principal traffic-ways for convenient access to manufactured home spaces or stands and other important facilities on the property.

(2) Streets located within manufactured home parks shall be classified as minor or major streets. Major streets are those which carry traffic from minor streets to the system of streets and highways outside the manufactured home park. Minor streets are those which are used primarily for access to manufactured home stands.

(3) The street system shall be designed to recognize existing easements, utility lines, etc., which are to be preserved; and to permit connection to existing facilities where necessary for the proper functioning of the drainage and utility systems.

(4) The street system should provide convenient circulation by means of minor streets and properly located major streets. Closed ends of dead-end streets should be provided with an adequate paved vehicular turning circle at least 80 feet in diameter.

(5) Pavement should be of adequate width to accommodate the contemplated parking and traffic load in accordance with the type of street:

(a) All entrance streets and other major streets with guest parking both sides: 36 feet minimum*

(b) Major streets with no parking: 20 feet minimum*

(c) Minor streets with parking on one side: 28 feet minimum*

(d) Minor or cul-de-sac streets with no parking: 20 feet minimum*

(e) One-way minor streets with no parking (generally acceptable only if less than 500 feet total length and serving less than 25 mobile home stands): 11 feet minimum*

* Reduced by two feet if adjacent sidewalk is provided.

(6) Streets should be adapted to the topography and should have suitable alignment and gradient for traffic safety, satisfactory surface [water] and groundwater drainage, and proper functioning of sanitary and storm sewer systems.

(7) Street intersections should generally be at right angles. Offsets at intersections and intersections of more than two streets at one point should be avoided.

(8) The street improvements shall extend continuously from the existing improved street system to each manufactured home space or stand and other important facilities requiring vehicular access. Streets shall provide suitable access to the manufactured home space or stand and other important facilities on the property, adequate connections to existing or future streets at the boundaries of the property, and convenient circulation for vehicles.

(9) Streets shall be graded for their full width to provide suitable finish grades for pavement and any sidewalks with adequate surface drainage and convenient access to the manufactured home stands and other important facilities on the property.

(10) Pavements and surfacing other than cement concrete shall be protected at the edges by suitable means where necessary to prevent raveling of the wearing surface and shifting of the pavement base.

(11) The subgrade shall be well drained, uniformly graded, and compacted.

(12) Where a pavement base is necessary, it should be a minimum of four inches thick and composed of crushed stone, gravel, or other appropriate durable material compacted to the maximum practical density. The wearing surface should be triple surface treated or bituminous concrete with a minimum thickness of one and one-half inches, compacted to the maximum practical density.

(13) Where Portland cement concrete is used, it should not be less than five inches thick on a prepared subgrade constructed in accordance with accepted practices, with expansion joints where driveways and walkways abut each other or curb.

(14) All points of entrance to or exit from the park shall be located no closer than 200 feet from any intersection of two public streets or roads.

(15) In the event that the streets of a manufactured home park are to be dedicated for public use, then said streets shall be developed in accordance with construction standards set forth in the requirements for the subdivision of land contained herein.

(16) Parking shall be provided as required in section 62.2. At least one parking space for each manufactured home space or stand shall be located on the individual space or stand, while the other parking space shall be located on the space or stand not farther than 100 feet from the space or stand.

91.25. Recreation and common area totaling not less than ten percent of the gross park area shall be developed and maintained by the management. The recreation or common area may include such facilities as community buildings, laundry facilities, and swimming pools.

91.26. An application for any use, permit, or certificate for a manufactured home park shall be accompanied by a site plan approved by the Jones County Health Department.

91.3. *General standards for manufactured homes on individual lots.* Manufactured homes on individual lots in zoning districts where allowed as a permitted or conditional use, shall meet the following additional requirements, except as otherwise provided herein:

91.31. The manufactured home shall be oriented with its long axis parallel to the street on which the lot fronts. An exception may be granted on lots where the slope requires one or more foundation pier(s) to exceed 44 inches in height; in which case, the manufactured home shall be placed perpendicular to the street. If the home is located in excess of 300 feet from any public road right-of-way it may face in any direction. The preceding exceptions may be granted by the zoning enforcement officer after verification.

91.32. The manufactured home shall be connected to water supply and sewage disposal systems in compliance with the regulations of the board of commissioners and the Jones County Health Department, and must meet any other applicable local, state, and federal requirements for the home and any external utility installations. An application for a manufactured home on an individual lot shall be accompanied by written approval from the Jones County Health Department certifying the suitability of the site for the installation of a sewage and waste management system.

91.33. A manufactured home placed on an individual lot in any zoning district must be supported by a permanent foundation, as per Appendix H of the Standard Building Code, as adopted by the Jones County Board of Commissioners. The manufactured home must be enclosed under all exterior walls by continuous, permanent, masonry materials, or be enclosed by a skirting designed for such purpose, unpierced except for required ventilation and access.

91.34. Where a manufactured home is placed on a permanent foundation, the tongue, axles, and transporting lights shall be removed after placement on the lot and before occupancy, except that on a single section manufactured home where the tongue is not designed to be removed, the removal of said tongue shall not be required. Where on any manufactured home on an individual lot the tongue, axles, transporting lights, or any other towing apparatus is designed to be removable upon placement on a site, such equipment or apparatus shall be removed after placement on the lot and before occupancy.

91.35. A set of permanent steps, with no opening between steps or on the sides of the set of steps, shall be provided where necessary for access to and from each exterior door on the manufactured home.

91.4. *Temporary use of manufactured homes.* A manufactured home may be used on a temporary basis in the following cases. All such units shall meet all other local, state, and federal requirements that may apply.

91.41. (a) A single manufactured home or similar mobile structure designed for other than residential purposes may be used in any district as a temporary office, security shelter, or shelter for materials or tools incidental to construction or development on the same lot.

(b) A manufactured home designed for residential purposes to be used as a temporary residence during construction of a single-family dwelling on the same lot shall be considered as a conditional use. A temporary manufactured home designed and used for residential purposes shall be permitted only within the AG-1, R-R, R-2, R-3, or C-1 districts.

(c) These uses require a zoning compliance permit and are permitted for a period not to exceed six months, unless the zoning enforcement officer finds that actual construction is continuing, and the use otherwise complies with the provisions of this resolution, in which case he shall renew the certificate for an additional six months.

91.42. A single manufactured home or similar mobile home structure designed for nonresidential purposes may be used for nonresidential purposes by any agency of local, state or federal government in any zoning district.

(Ord. No. 201203-2o, 3-20-2012)

Section 92. Single-family attached residences.

Within the districts permitting single-family attached residences, the following requirements shall apply:

92.1. No more than ten or fewer than three continuous single-family attached units shall be built in a row with approximately the same front line.

92.2. No side yard is required except that on corner and interior lots the end of the building in any grouping of single-family attached units shall conform to the side yard requirements of that district.

92.3. Insofar as is practicable, off-street parking facilities shall be grouped in bias, either adjacent to streets or in the interior of blocks. Off-street parking spaces shall be no more than 100 feet, by the most direct pedestrian route, from a door of the dwelling unit it intends to serve.

92.4. All single-family attached residential complexes shall be required to tie into the public water and sanitary sewer systems, where such systems are available.

92.5. All other requirements within the district in which the single-family attached residences are located shall be met.

(Ord. No. 201203-2o, 3-20-2012)

Section 93. Accessory and temporary buildings.

93.1. *Accessory buildings.* The location of accessory buildings and uses in residential districts must meet the following requirements:

93.11. Where an accessory building is attached to the main building, a substantial part of one wall of the accessory building shall be an integral part of the main building, and such accessory building shall be attached to the main building in a substantial manner by a roof, and therefore shall meet such requirements applicable to the main building.

93.12. A detached accessory building shall not be closer than five feet to the lot line, provided that accessory buildings in yards on corner or double frontage lots that are adjacent to public rights-of-way shall meet the setback requirements of section 82.

93.13. A detached accessory building shall not exceed two stories in height, and shall cover not more than 30 percent of the rear or side yard.

93.14. No detached accessory building shall be located on the front yard of a lot.

93.2. *Temporary buildings.* Temporary buildings used in conjunction with construction work only may be permitted in any district and shall be removed immediately upon completion of construction.

93.3 *Prohibited accessory and temporary buildings or structures.* Manufactured homes, mobile homes, freight trailers, box cars, trailers, office trailers, shipping containers, or any other structure or vehicle that was not originally fabricated for use as an accessory building shall be prohibited.
(Ord. No. 201203-2o, 3-20-2012; Ord. of 3-4-2014)

Section 94. Additional dwellings on a single lot.

An application for an additional single-family dwelling or an additional manufactured home shall conform to the following provisions:

94.1. *Additional dwellings on a lot less than ten acres in size.*

94.11. This shall be considered a conditional use.

94.12. The main dwelling is located in an AG-1, R-R, R-1, R-1A, R-2, R-3, R-MH or R-1-R district.

94.13. Each additional dwelling shall conform to the development standards for the district in which it is located.

94.14. The arrangement of such dwelling shall be in such a manner that, if the lot is ever subdivided, no substandard lots or nonconforming buildings are created. In order to prevent mandated subdividing, additional dwellings shall not be permitted on lots served by a private road.

94.15. Garage apartments shall be permitted only when a main dwelling is already built on the building site, but said apartments shall adhere to the requirements of the use district in which they are located.

94.16. No more than two units on a lot shall be permitted.

94.17. An application for an additional dwelling shall be accompanied by written approval from the Jones County Health Department.

94.2. *Additional dwellings on a lot ten acres or greater.*

94.21. This shall be considered a permitted use.

94.22. The main dwelling is located in an AG-1, R-R, R-1, R-1A, R-2, R-3, R-MH or R-1-R district.

94.23. Each additional dwelling shall conform to the development standards for the district in which it is located, including adequate road frontage.

94.24. The arrangement of such additional dwelling shall be in such manner that, if the lot is ever subdivided, no substandard lots or nonconforming buildings are created. In order to prevent mandated subdividing, additional dwellings shall not be permitted on lots served by a private road.

94.25. An application for an additional dwelling shall be accompanied by written approval from the Jones County Health Department.

94.3. *Accessory dwelling unit (ADU).* An ADU shall meet all of the following criteria:

94.31. The unit may not exceed more than 50 percent of the floor area of the main home. The square footage of the ADU shall not be counted as part of the floor area of the main dwelling unit.

94.32. An ADU may only be occupied by an immediate family member. For the purposes of this section, an immediate family member shall be defined as a grandmother, grandfather, mother, father, brother, sister, son, or daughter.

94.33. The family member occupying the ADU must be unable to live alone due to a medical disability. A letter from a physician will be required at the time application is made to demonstrate the disability. No application will be accepted that does not include the physician's letter.

94.34. The ADU will not be required to be separated from the main dwelling by fire rated construction.

94.35. An ADU can be located within an existing home, such as in a basement or an attic space, built as a home addition, constructed as a detached cottage in the rear of the property, or can result from a garage conversion.

94.36. An ADU may not be occupied after the unit is no longer used by the disabled family member.

94.37. The owner of the ADU shall be responsible to notify a purchaser at the time of sale that the ADU may not be used for residential purposes by the new owner.

Table 11 reserved.

Table 12 reserved.

(Ord. No. 201203-2o, 3-20-2012)

Section 95. Home occupations.

95.1. *Special requirements.* Home occupations, where permitted, must meet the following special requirements:

95.11. The applicant must be the owner of the property on which the home occupation is to be located, or must have written approval of the owner of the property if the applicant is a tenant.

95.12. The home occupation shall be operated only by the members of the family residing on the premises, and no articles or service shall be sold or offered for sale except as may be produced by members of the immediate family residing on the premises.

95.13. The home occupation shall be restricted to the main building only, and shall not occupy more than 25 percent of the floor area of said building.

95.14. The home occupation shall not generate excessive traffic or produce obnoxious odors, glare, noise, vibration, electrical disturbance, or radioactivity, or other conditions detrimental to the character of the surrounding area.

95.15. The building in which the home occupation is to be located must be an existing structure ready for occupancy and not a proposed structure.

95.16. Any business sign placed on the premises shall not be larger than two square feet in sign area.

95.17. Expiration. A permit for home occupations shall expire under the following conditions:

95.17.1. Whenever the applicant ceases to occupy the premises for which the home occupation was issued. No subsequent occupant of such premises shall engage in any home occupation until he has been issued a new permit after proper application.

95.17.2. Whenever the holder of such a permit fails to exercise the same for any period of six consecutive months.

95.2. *Cottage industries.* A cottage industry may consist of any accessory business use, except junk or scrap yards, automobile repair shops or garages, or meat processing/packaging operations, that fully complies with all of the following standards for the applicable zoning district:

95.21. The cottage industry must be owned by the owner of the property on which the cottage industry is to be located, or the business owner must have written approval of the owner of the property if the applicant is a tenant.

95.22. In addition to the permanent residents of the dwelling unit, no more than two full-time equivalent employees may be employed by the business on the premises, and no article or service shall be sold or offered for sale, except as may be produced by the employees of the cottage industry.

95.23. All business activities or transactions associated with the cottage industry shall be conducted entirely within the dwelling unit or in an accessory building on the same lot. Any accessory buildings used for cottage industries shall comply with the requirements in section 93. There must be an existing dwelling on site.

95.24. The total floor space devoted to a cottage industry shall be no more than 50 percent of the primary dwelling unit gross floor area.

95.25. The cottage industry shall not necessitate any change in the outside appearance and residential character of the dwelling unit and/or accessory building.

95.26. The cottage industry shall not generate more than 25 average daily trips, according to The Institute of Traffic Engineer's Trip Generation Manual (Latest edition). Only one delivery per day by a vehicle in excess of 10,000 pounds will be permitted.

95.27. At least three but no more than five off-street paved parking spaces shall be provided for the cottage industry.

95.28. The cottage industry shall not involve the use of or result in the production of any hazardous materials.

95.29. The cottage industry shall not conduct business activities between the hours of 6:00 p.m. and 6:00 a.m.

95.210. The cottage industry shall not produce any noises or odors or light that may be discernable by the average person beyond the boundaries of the property.

95.211. All equipment, material and products of the cottage industry, with the exception of one vehicle intended for business use, shall be stored inside the dwelling unit or in an accessory building on the lot. An area of up to 2,000 square feet may be used for outside storage of completed product if it is not visible from any adjoining or nearby property.

95.212. The cottage industry shall not generate smoke, glare, vibrations, electrical disturbance, radioactivity, or other conditions that will be a nuisance to the surrounding area.

95.213. The cottage industry and dwelling unit and/or accessory building shall comply with all applicable building and fire codes. At least one bathroom that complies with the Georgia Accessibility Code will be provided.

95.214. Business signs for cottage industries shall be professionally painted and shall be limited to two square feet.

95.215. Deer processing is permitted within the AG-1 district, subject to compliance with all state and federal regulations. A disposal pit is required. Any pit used for the disposal of animal waste shall be located at least 500 feet from any property line and 250 feet from any state waters.

95.3. *Expiration of permit.* A permit for a cottage industry shall expire under the following conditions:

95.31. Whenever the applicant ceases to occupy the premises for which the cottage industry was issued. No subsequent occupant of such premises shall engage in any cottage industry until a new permit has been issued for the proposed cottage industry.

95.32. Whenever the holder of such a permit fails to exercise the same for any period of six consecutive months.

(Ord. No. 201203-2o, 3-20-2012)

Section 96. Automobile service stations.

Within the districts permitting automobile service stations, the following requirements shall apply:

96.1. *Location.* The property on which an automobile service station is located shall not be within 100 feet of any residential district or any property containing a school, public playground, church, hospital, public library, or institution for children or dependents.

96.2. *Site requirements.* An automobile service station shall have a minimum frontage on the primary street of 120 feet and a minimum area of 12,000 square feet. All buildings shall be set back 40 feet from all street right-of-way lines, and all canopies shall be set back 15 feet from all street right-of-way lines.

96.3. *Access to site.* Vehicular entrances or exits at an automobile service station shall meet the following requirements:

96.31. There shall be no more than two curb cuts for the first 120 feet of street frontage or fraction thereof, plus no more than one additional curb cut for each additional 150 feet of street frontage or fraction thereof.

96.32. Vehicular entrances or exits shall contain an access width along the curb line of the street of not more than 40 feet as measured parallel to the street at its narrowest point, and shall not be located closer than 20 feet to a street intersection or closer than ten feet to adjoining property.

96.33. Curb cuts or driveways shall be no closer to each other than 20 feet at both the right-of-way line and the curb or edge of the pavement along a single street.

96.4. *Gasoline pump islands.* All gasoline pump islands shall be set back at least 15 feet from the right-of-way line, or where a future widening line has been established, the setback line shall be measured from such line. Where pump islands are constructed perpendicular to the right-of-way line, this setback requirement shall be increased to 30 feet. All pumps shall be at least 60 feet from the centerline of an arterial street, 55 feet from the centerline of a collector street, and 45 feet from the centerline of a local street.

96.5. *Other site improvements.* In addition to the above requirements, the following requirements for additional site improvements shall be adhered to:

96.51. Raised curb of at least six inches in height shall be erected along the street property lines, except for driveway openings.

96.52. A solid fence or wall six feet in height shall be erected along all adjacent property lines facing any adjacent residential lot.

96.53. Exterior lighting shall be arranged so that it is deflected away from adjacent properties.

96.54. All drives, parking storage, and service areas shall be paved and curbed and a good stand of grass or other living landscaping material shall be maintained on the remainder of the lot.

96.6. *Storage of inflammable products.* Outside aboveground tanks for the storage of gasoline, liquefied petroleum gas, oil, or other inflammable liquids or gases shall be prohibited at any automobile service station in all zoning districts.

(Ord. No. 201203-2o, 3-20-2012)

Section 97. Signs.

97.1. *Intent.* The intent of this section is to protect the health, safety, and general welfare of the public by establishing standards for the design, size, number, location, illumination and maintenance of all signs and sign structures not located within a building. These regulations are also designed to maintain and enhance the aesthetic environment of the community, to

improve pedestrian and vehicular safety, and to minimize the possible effect of signs on nearby public and private property. These regulations are not intended to, and do not restrict the content of sign messages.

97.2. *Supplemental definitions.*

(1) *Banner, pennant, and streamer.* Any lightweight fabric, or flexible material, suspended in a series from a rope, wire or string.

(2) *Billboard.* Any sign larger than the maximum size allowed in a commercial district (C-1, C-2, C-3, M-1 and M-2) and no larger than 400 square feet. Maximum height of a billboard shall be 35 feet.

(3) *Construction sign.* Any temporary sign located on premises under construction, alteration, or demolition.

(4) *Flag.* Any fabric, banner, or bunting used to symbolize government, political subdivision, or other legalized entity.

(5) *Freestanding sign.* Any sign that is supported by an independent structure placed on or anchored in the ground and not attached to any building or secondary structure.

(6) *Guest quarter sign.* Any sign which is located on property containing a guest quarter.

(7) *Institutional sign.* Any sign which is located on property containing a nonprofit corporation or establishment, church or other place of worship, educational facility, civic club or association, golf, swimming, tennis or similar club, recreation area, day care center, hospital, nursing home, hotel, or conditional use, and which is located on the same parcel as the activity identified.

(8) *Memorial sign or tablet.* Any sign located on a tablet and mounted flush with the wall of a building.

(9) *Multifamily identification sign.* Any sign which is located on property containing a multifamily development.

(10) *Political sign.* Any temporary sign located on private property during the period from 60 days before to five days after any public election. For the purpose of this definition a political sign shall not be larger than 32 square feet.

(11) *Portable sign.* Any sign, which because of its design or construction was originally intended to be transportable (moveable); including, but not limited to: signs designed to be transported by means of wheels, signs converted to A- or T-frames, menu and sandwich board signs, and signs attached to or painted on vehicles parked and visible from the public right-of-way, unless said vehicle is used in the normal day-to-day operations of the business.

(12) *Projection/canopy sign.* Any sign affixed to a building, wall or canopy in such a manner that its leading edge is extended more than 24 inches beyond the surface of the building or wall.

(13) *Professional sign.* Any sign which is attached flush to the wall of a building, or located in the front yard where a professional occupation is located.

(14) *Reader board.* Any sign or portion thereof with characters, letters, or illustrations, that can be mechanically or electronically changed or rearranged without altering the face of the surface.

(15) *Real estate sign.* A temporary sign located on property for sale, lease or rental.

(16) *Roof sign.* Any sign erected and constructed wholly on and over the roof of a building supported by roof structure and extending vertically above the highest portion of the roof.

(17) *Shopping/business center identification sign.* Any freestanding structure located on property containing a shopping center, which structure may contain up to ten separate signs with total sign area for all signs not exceeding 240 square feet.

(18) *Sign.* Any identification, description, illustration, object, or device, illuminated or nonilluminated, which is visible from any public place, or is located on private property and exposed to the public, including any permanently installed or situated merchandise, or any emblem, painting, banner, pennant, placard or temporary sign designed to advertise, identify or convey information, with the exception of window displays and national flags.

(19) *Sign area.* The smallest square, rectangle, triangle, circle, or combination thereof, encompassing the entire advertising area, excluding architectural trim and structural support.

(20) *Sign structure.* Any structure which supports, has supports, has supported or is capable of supporting a sign, including decorative cover.

(21) *Subdivision identification sign.* Any sign located on private property at the entrance to a residential subdivision.

(22) *Temporary identification subdivision sign.* Any sign located on private property and at the entrance to a newly developed subdivision.

(23) *Temporary sign.* Any sign that by its design and construction is intended to be used only temporarily and is not permanently mounted or anchored.

(24) *Wall sign.* Any sign painted on, or erected within 24 inches and parallel to the exterior wall of any building or structure.

97.3. *General provisions.* All signs except as provided in section 97.4, shall conform to the following standards:

(1) All provisions and regulations governing signs shall bind any applicant for a sign permit.

(2) No sign or sign structure shall be erected without a certificate of zoning compliance, as may be required by these regulations.

(3) All signs shall be subject to the same side yard and height limitations imposed upon structures in the use district in which said signs are located.

(4) For the purpose of computing sign area, only one side of a "V-type" or double-faced sign shall be considered.

(5) Only signs authorized by Georgia Law shall be placed upon any street or highway right-of-way.

(6) All signs shall be on property where a permit has been granted for a use of land or structure allowed in the district where said sign is to be located. For the purpose of this section, a sign shall not be considered a use of land or structure.

(7) Height of all signs shall be measured from the tallest portion of the sign or sign structure, whichever is taller, to the centerline of the nearest road.

97.4. *Exempt signs.* The following signs shall be exempted from permit requirements:

(1) Any sign that is placed inside a window or upon the windowpanes or glass and is visible from the exterior of the window.

(2) Any banner erected across public rights-of-way, provided that such sign is erected with approval from the city or county government.

(3) Any political sign as defined herein.

(4) Any sign or notice posted or erected by, or at the direction of the city, county or state government.

(5) Any official flag, emblem, or insignia of the United States, the State of Georgia, or other country or state.

(6) Real estate signs.

(a) In AG-1, R-R, R-MH, R-1, R-1A, R-1-R, R-2, R-3, and PUD districts, there shall be no sign in excess of four square feet; no more than three such signs on any single lot; and no sign exceeding two and one-half feet in height.

(b) In C-1, C-2, C-3, M-1 and M-2 districts, there shall be no sign in excess of 32 square feet; no more than one such sign on any single lot; no sign closer than 20 feet to any property line; and not exceeding eight feet in height.

(7) Construction signs.

(a) In AG-1, R-R, R-MH, R-1, R-1A, R-1-R, R-2, R-3, and PUD districts, there shall be no sign in excess of four square feet; no more than one such sign on any single lot; no sign closer than 20 feet to any property line; and not exceeding two and one-half feet in height.

(b) In commercial districts, C-1, C-2, C-3, M-1, and M-2 districts, there shall be no sign in excess of 32 square feet; no more than one such sign on any single lot; and no sign closer than 20 feet to any property line; and not exceeding eight feet in height.

(8) One temporary identification subdivision sign not to exceed 32 square feet of sign area; not illuminated, and maintained at subdivider's expense. Such signs shall be removed after 80 percent of the lots are conveyed. Failure to remove these signs will be a violation of this resolution.

(9) One flag per lot, not to exceed 15 square feet in size when located at least 20 feet from the front property line.

97.5. *Prohibited signs.* The following are not permitted in any zoning district:

(1) Any sign which has visible movement, achieved by electrical, mechanical or nonmechanical means; and including repetitive flashing, or electrical pulsation. This provision excludes reader board signs, which change copy via an electrical process.

(2) Any sign painted on or attached to natural features such as trees, rocks, utility poles and fence posts.

(3) Any sign which by reason of its size, location, coloring or illumination impedes the vision of drivers, or obstructs or detracts from the visibility of any traffic sign or traffic-control device on public streets and roads.

(4) Any sign which obstructs free ingress or egress from a building, door, window, fire escape, or other exit way required by any government agency or code regulating public safety.

(5) Any sign that imitates traffic signs or implies the need or requirement of stopping or the existence of danger.

(6) Any roof sign.

(7) Banners, pennants and streamers; except as provided in section 97.4(2).

97.6. *Signs as permitted uses.*

(1) *Residential districts.* Within the AG-1, R-R, R-MH, R-1, R-1A, R-1-R, R-2, R-3, and PUD districts, the following signs are permitted:

(a) One nonilluminated sign not exceeding two square feet per face, not exceeding two faces and not exceeding two and one-half feet in height is authorized per lot.

(b) One institutional sign, not exceeding 64 square feet per face, nor exceeding 128 square feet for all faces combined and a maximum height of eight feet, shall be permitted per lot, except that double frontage lots may have two such signs, one on each road front.

(c) For apartment buildings and other multifamily residences, one memorial sign not exceeding four square feet is authorized on each building. One multifamily identification sign not exceeding 64 square feet per face, nor exceeding 128 square feet for all faces combined, and having a maximum height of eight feet shall be permitted per entrance to the development.

(d) One subdivision identification sign is authorized per entrance to a subdivision. These signs shall not exceed a maximum area of 64 square feet per face, and shall have a maximum height of eight feet. All signs erected will be contiguous with the development.

(e) Memorial sign/tablet, not to exceed one sign per lot and no larger than two square feet in size.

(2) *Commercial districts (C-1, C-2, C-3, M-1, M-2).* The following signs are permitted:

(a) One permanent freestanding sign with a maximum permitted size equal to ten percent of the square footage of the largest side of the building. In no case may the sign exceed 150 square feet per face nor exceed 300 square feet for all faces combined. A maximum height of 25 feet shall be permitted. Double frontage lots may have two such signs, one per road front.

Each building may have either a projection/canopy sign, wall, or reader board sign which may not exceed five percent of the square footage of the side of the building on which the sign is mounted. In no case may the sign exceed a maximum size of 32 square feet in sign area.

(b) Shopping/business center.

(i) Each business establishment located within a shopping center may have either a canopy/projection, wall, or reader board sign. The sign may not exceed five percent of the square footage of the wall area of the tenant space. In no case may the sign exceed a maximum size of 32 square feet in sign area.

(ii) A shopping/business center may erect one shopping center identification sign not to exceed 25 feet in height with a maximum permitted size equal to ten percent of the square footage of the side of the largest side of the building. In no case may the sign exceed 240 square feet per face nor exceed 480 square feet for all faces combined. Double frontage lots may have two such signs, one per road front.

(c) In addition to any other requirements, freestanding, projection/canopy, wall, or reader board signs shall meet the requirements of sections 97.9 and 97.10.

97.7. *Signs as conditional uses.*

(1) *Billboards.*

(a) A billboard shall be a conditional use in the commercial districts (C-1, C-2, C-3, M-1 and M-2).

(b) A billboard shall not be located within 1,000 feet of another billboard on either side of the street, regardless of which direction the sign is viewed, as measured along the right-of-way from the nearest edge of the sign. Further, a billboard shall not be located within 500 feet of another billboard as measured by a radius around the billboard.

(c) If a sign is within 200 feet of a residential district, it shall meet all of the following requirements:

(i) Have a 100-foot setback from all residential districts.

(ii) Be no larger than 400 square feet.

(d) No billboard shall be located within 1,000 feet of the property line of public schools, cemeteries, public parks, playgrounds or recreation areas, public forests, or public buildings used primarily as places of public assembly.

(e) No billboard shall be located within 1,000 feet of the property line of a historic zoning overlay district.

(f) Distances, when required by these regulations, shall be established by a survey performed by a surveyor licensed in the State of Georgia. Said survey shall be provided at the time an application is made.

(g) Double-stacked or side-by-side signs are prohibited.

(h) Billboards may not have flashing, intermittent, or moving light, except those giving public service information such as time, date, temperature, weather or other similar information.

(i) No billboard shall be located within 1,000 feet of any legally recognized site or monument.

(2) *Multiple signs on a single lot.*

(a) A single sign, in addition to those authorized in section 97.6, shall be considered a conditional use.

(b) The sign must meet all applicable standards for the permitted sign on the lot.

(3) *Guidelines for review of a conditional use for a sign.*

(a) In addition to the standards contained in section 116.4, the following criteria shall guide in reviewing a conditional use request for a sign:

(i) Whether the size of the site and the size of the sign are suitable, considering the relationship of the proposed sign to adjacent parcels of land and development patterns in the area;

(ii) The impact the proposed sign may have on the view of significant features of the landscape as seen by motorists and adjacent property owners, the proposed location and setback of the sign on the site, and its aesthetic impact on surrounding properties;

(iii) The effect the proposed sign will have on traffic and highway safety;

(iv) Any accompanying or unique feature of the proposed sign, including plans for illumination and landscaping;

(v) Access provisions to the site. Will it adequately allow for modifications and maintenance of the sign without impacting surrounding property owners; and

(vi) Any other factor that is related to the suitability of the proposed sign for the proposed site, including any conditions or limitations offered by the applicant.

97.8. *Portable signs.* In zoning districts C-1, C-2, C-3, M-1, and M-2, any person, firm, or corporation may be allowed one portable on-premises sign per lot or business for a special use or event, such as, but not necessarily limited to, grand openings, seasonal sales, liquidations, going-out-of-business sales, fire sales, and giveaway of free promotions, only under the following conditions and requirements:

(1) The maximum size allowance for these devices and signs shall not exceed 32 square feet. Said sign shall not have flashing lights.

(2) The sign must be placed on the site in such a manner as to be at least five feet from the right-of-way and to not be an obstruction for traffic or visibility. The sighting of the sign is subject to approval of the zoning enforcement officer or designated employee.

(3) To prevent wind damage to the sign or other property, the sign must be securely anchored to the site in an acceptable manner.

(4) The maximum number of portable sign permits to be issued to a single location or site at any given time shall be one sign. The maximum duration for each permit shall be 14 days. No more than four such permits shall be issued on the same site, location or lot within one calendar year from January 1 to December 31.

97.9. *Special requirements for projection/canopy signs.* In addition to the requirements for each zoning district where a sign is to be located, the following shall apply to projection/canopy signs:

(1) No projection/canopy sign shall be less than ten feet above the level of a sidewalk or other pedestrian way, nor shall it be less than 16 feet above the level of a driveway or other vehicular thoroughfare.

(2) Projecting/canopy signs are not allowed over public property.

97.10. *Special requirements for reader boards.* In addition to the requirements of each zoning district the following shall apply to reader boards:

(1) Reader boards may change messages via an electronic process.

(2) Reader boards may be attached to the wall of a structure provided the requirements of section 25.11 [sic] are met.

97.11. *Reserved.*

97.12. *Special requirements for illuminated signs.*

(1) All signs shall conform to the electrical code requirements for the State of Georgia.

(2) Illumination devices shall be placed and shielded to prevent light from being cast directly into residential districts, or hindering the operation of motor vehicles.

(3) No revolving beam or beacon of light resembling any emergency vehicle light shall be permitted as a part of a sign display.

(4) No sign may be internally illuminated within a residential district.

97.13. *Maintenance and removal of signs.*

(1) Any sign which pertains to an event or purpose which no longer applies, shall be deemed to have been abandoned. Such sign shall be taken down and removed within 30 days of the receipt of notice by the zoning enforcement officer to the owner, agent or person having a beneficial use of the building, structure or land upon which such sign is located.

(2) Signs existing on the effective date of this resolution may continue in existence so long as they are properly maintained and kept in good repair. In any case any sign is not so maintained, the planning and zoning commission shall give written notice to the person, firm or corporation responsible for the sign to correct the specified maintenance problems. If the designated corrective action is not taken within 30 days of the mailing of such notice, the planning and zoning commission shall order the responsible firm or corporation to remove the sign.

(3) Any legally established nonconforming sign or sign structure shall be permitted without alteration in size or location, provided that the requirements of section 61.5 of this resolution are met. Nothing herein shall prevent maintenance, repairing, or posting of legally established nonconforming signs.

All ordinances or parts of ordinances in conflict herewith are hereby repealed.
(Ord. No. 201203-2o, 3-20-2012; Ord. of 10-2-2018)

Section 98. Nonstructural uses.

The following provisions shall apply to specified uses which primarily exist outside of any structure:

98.1. *Open or common space.* Within developments where open or common space is required or where such space is provided by a developer, the following conditions shall apply:

98.11. Open space shall be located approximately evenly throughout the development so that all residents of the development have easy access to such areas.

98.12. At least 50 percent of all required common open space shall be approximately level with a slope of not greater than five percent. The common open space shall be land within the total development site used for recreational, park, or environmental conservation for the enjoyment of the occupants of the development and their guests, or dedicated to the county for use as a public park. Common open space shall [not] include public or private streets, driveways,

private yards or patios, parking areas, or utility easements where the found surface cannot be used appropriately for active or passive recreation, nor other areas primarily designed for other operating functions.

98.13. No lot or dwelling unit in a development containing open space shall be sold until a corporation, association, property owner's group, or similar entity has been formed with the right to assess all the properties which are jointly owned with interests in the common areas and facilities in the entire development or in the tract which is a part of the entire development, in order to meet the expense of such entity, and with authority to control and the duty to maintain all of said mutually available features of the development or tract portion thereof. Such entity shall operate under recorded conditions, covenants, and restrictions which may include compulsory membership of all owners of lots or dwelling units and flexibility of assessments to meet changing costs of maintenance, repairs, and services. The developer shall submit evidence of compliance with the requirement to the zoning enforcement officer. This subsection shall not apply to land dedicated to the county for public purposes.

98.2. *Development of natural resources.* Within the districts permitting development of natural resources, including the removal of minerals and natural materials, such activity shall be governed by the following requirements:

98.21. A plan of development shall accompany the application for a zoning compliance permit or conditional use permit. Such plan shall show the proposed development and its staging, proposed traffic flow patterns to and from the mining area, its relation to all adjacent property within 300 feet of the proposed mining area, topographic surveys indicating present conditions, including topography, drainage and soils, and the conditions of the mined area at the end of the exploitation phase. The plan of development shall also show that the proposed mining activity will not create hazardous or damaging conditions for other property by reason of increased flooding or rise in ground-water levels, erosion caused by increased runoff, deposition of debris from flood erosion, or for other reasons.

98.22. The site shall be a minimum of five acres with no building or mining area within 50 feet of any property line.

98.23. The location of the mining activities shall not place any undue hardship on adjoining property owners, and the operation in the location proposed should not create unusual traffic hazards or the need for special public streets, bridges, or any other public facilities unless the developer assumes full cost of such improvements.

98.24. All facilities shall meet air and water quality standards of the environmental protection division of the Georgia Department of Natural Resources. The plan for reuse and reclamation shall meet the requirements of and be approved by the state surface mine land use board.

98.25. Any extension of quarrying operations beyond the property lines actually being quarried at the effective date of this resolution shall be considered a new operation and shall obtain a zoning compliance permit or conditional use permit.

98.26. Quarry areas being excavated shall be entirely enclosed with a six-foot high fence located at least ten feet back from the edge of any excavation.

98.3. *Campgrounds.* The following requirements apply to campgrounds not developed as part of a larger park or recreation area:

98.31. No campground shall be located except with direct access to a county, state, or federal highway and with a minimum lot width of 50 feet for the portion used for entrance and exit. No entrance or exit shall be through a residential district, or shall require movement of traffic from the campground through a residential district.

98.32. The minimum lot area per campground shall be at least one and one-half acres.

98.33. Recreational vehicles using campground facilities shall meet all applicable local and state regulations. Spaces shall be rented by the day or week only, with a maximum 90-day occupancy by any one user in any 180-day period.

98.34. Accessory buildings and uses, including management headquarters, recreational facilities, toilets, showers, laundry facilities, and other uses and structures customarily incidental to the operation of a campground are permitted as accessory uses in any district in which campgrounds are allowed, provided that the following conditions are met:

98.34.1. Accessory uses and structures and parking areas primarily related to their operation shall not occupy more than ten percent of the areas of the campground.

98.34.2. Use of accessory uses and buildings shall be restricted to occupants of the campground.

98.34.3. Accessory uses and buildings shall present no visible evidence of commercial character which would attract customers from outside the campground.

98.35. No space shall be located such that any part intended for occupancy for sleeping purposes is within 25 feet of the right-of-way line of any local street or within 50 feet of the right-of-way line of any collector or arterial street or expressway.

98.36. An application for a zoning compliance permit or conditional use permit for a campground must include approval of the proposed site plan by the Jones County Health Department.

98.4. *Cemeteries.* Within districts permitting cemeteries as a permitted or conditional use, the following requirements shall apply:

98.41. The site proposed for a cemetery shall not interfere with the development of a system of collector and larger streets in the vicinity of such site. In addition, such site shall have direct access to a thoroughfare.

98.42. Any new cemetery shall be located on a site containing not less than 20 acres, except as otherwise provided herein.

98.43. All structures shall be not closer than 25 feet to any property line.

98.44. All graves or burial plots shall be not closer than 25 feet to any property or local street right-of-way line and not closer than 50 feet to any collector or arterial street or expressway right-of-way line.

98.45. The entire cemetery property shall be landscaped and maintained.

98.46. Provided the requirement of all applicable federal, state, and local laws and regulations are satisfied, a plot for the burial of members of the landowner's family may be established subject to the following provisions:

98.46.1. The plot must be located within an AG-1 district.

98.46.2. Minimum lot size shall be one acre.

98.46.3. No grave shall be closer than 75 feet from any property line, nor closer than 100 feet from any well, nor closer than 25 feet from any public street or road right-of-way.

98.5. *Communication towers.*

98.51. No new tower or cell site may be established if there is a technically suitable space available on an existing communications tower within the geographic area that the new site is to serve.

98.52. All structures shall be located no closer to the nearest adjoining property line than its finished height.

98.53. All structures must meet the requirements of Part 77 of the Federal Aviation Regulations, and guidelines of the Federal Communications Commission. Said certifications shall be the responsibility of the applicant.

98.54. All obsolete or unused facilities shall be removed within 12 months of cessation of operations at the site.

98.55. For all towers that are required to be illuminated, a dual lighting mode of red at night and strobe during day shall be allowed. Strobe at night shall not be permitted.

(Ord. No. 201203-2o, 3-20-2012)

Section 99. Adult entertainment establishments.

99.1. *Intent.* The purpose of this section is to regulate certain types of businesses including, but not limited to, adult entertainment establishments, to the end that the many types of criminal activities frequently engendered by such businesses (as demonstrated by the experiences of other municipalities including, but not limited to, Atlanta and Fulton County, Georgia; Seattle and Renton, Washington; New York, New York; Los Angeles, California; and Fort Lauderdale and Palm Beach, Florida) will be curtailed. However, it is recognized that such regulation cannot de facto approach prohibition. Otherwise, a protected form of expression would vanish. As to adult dance establishments, this article represents a balancing of competing interests: reduced criminal activity and protection of the surrounding neighborhoods through the regulation of adult entertainment establishments versus the protected rights of adult entertainment establishments and patrons.

99.2. *Definitions.* The following terms used in this section defining adult entertainment establishments shall have the meanings indicated below:

(1) *Adult bookstore* means an establishment having a substantial or significant portion of its stock in trade, books, magazines or other periodicals which are distinguished or characterized by their emphasis on matter depicting, describing or relating to specified sexual activities or specified anatomical areas or an establishment with a segment or section, comprising five percent of its total floor space, devoted to the sale or display of such materials or five percent of its net sales consisting of printed materials which are distinguished or characterized by their emphasis on matter depicting, describing or relating to specified sexual activities or specified anatomical areas.

(2) *Adult dancing establishment* means a business that features dancers displaying or exposing specified anatomical areas.

(3) *Adult motion picture theater* means an enclosed building with a capacity of 50 or more persons used for presenting material distinguished or characterized by an emphasis on matter depicting, describing or relating to specified sexual activities or specified anatomical areas for observation by patrons therein.

(4) *Adult mini-motion picture theater* means an enclosed building with a capacity of less than 50 persons used for commercially presenting material distinguished or characterized by an emphasis on matter depicting, describing or relating to specified sexual activities or specified anatomical areas for observation by patrons therein.

(5) *Adult motion picture arcade* means any place to which the public is permitted or invited wherein coin- or slug-operated or electronically, electrically, or mechanically controlled still or motion picture machines, projectors or other image-producing devices are maintained to show images to five or fewer persons per machine at any one time and where the images so displayed are distinguished or characterized by an emphasis on depicting or describing specified sexual activities or specified anatomical areas.

(6) *Adult video store* means an establishment having a substantial or significant portion of its stock in trade, video tapes or movies or other reproductions, whether for sale or rent, which are distinguished or characterized by their emphasis on matter depicting, describing or relating to specified sexual activities or specified anatomical areas or an establishment with a segment or section, comprising five percent of its total floor space, devoted to the sale or display of such material or which derives more than five percent of its net sales from videos which are characterized or distinguished by their emphasis on matter depicting, describing or relating to specified sexual activities or specified anatomical areas.

(7) *Erotic dance establishment* means a nightclub, theater or other establishment which features live performances by topless and/or bottomless dancers, go-go dancers,

strippers or similar entertainers, where such performances are distinguished or characterized by an emphasis on specified sexual activities or specified anatomical areas.

(8) *Escort bureau; introduction services* means any business, agency or persons who, for a fee, commission, hire, reward or profit, furnished or offer to furnish names of persons, or who introduce, furnish or arrange for persons who may accompany other persons to or about social affairs, entertainments or places of amusement, or who may consort with others about any place of public resort or within any private quarters.

(9) *Minor* means, for the purpose of this article, any person who has not attained the age of 18 years.

(10) *Specified sexual activities* means and shall include any of the following:

(a) Actual or simulated sexual intercourse, oral copulation, anal intercourse, oral anal copulation, bestiality, direct physical stimulation of unclothed genitals, flagellation, or torture in the context of a sexual relationship, or the use of excretory functions in the context of a sexual relationship and any of the following sexually oriented acts or conduct; anilingus, buggery, coprophagy, coprophilia, cunnilingus, fellatio, necrophilia, pederasty, pedophilia, piquerism, sapphism, zooerastia; or

(b) Clearly depicted human genitals in a state of sexual stimulation, arousal, or tumescence; or

(c) Use of human or animal ejaculation, sodomy, oral copulation, coitus, or masturbation; or

(d) Fondling or touching of nude human genitals, pubic region, buttocks, or female breast; or

(e) Masochism, erotic, or sexually oriented torture, beating, or infliction of pain; or

(f) Erotic or lewd touching, fondling, or other sexual contact with an animal by a human being; or

(g) Human excretion, urination, menstruation, vaginal or anal irrigation.

(11) *Specified anatomical areas* shall include any of the following:

(a) Less than completely and opaquely covered human genitals or pubic region; buttock; or female breast below a point immediately above the top of the areola; or

(b) Human male genitalia in a discernibly turgid state, even if completely and opaquely covered.

99.3. *Prohibited activities.* No person, firm, partnership, corporation or other entity shall publicly display or expose or suffer the public display or exposure, with less than a full opaque covering, of any portion of a person's genitals, pubic area, or buttocks in a lewd and obscene fashion. All signs or other forms of advertisement associated with a permitted adult entertainment establishment must comply with this requirement.

99.4. *General performance standards.* All adult entertainment establishments defined in section 99.2 shall comply with the following requirements. For the purposes of this section, distance shall be by airline measurement from property line, using the closest property lines of the parcels of land involved. The term "parcel of land" means any quantity of land capable of being described by location and boundary, designated and used or to be used as a unit.

(1) No adult entertainment establishment shall be located within 1,000 feet of any parcel of land upon which any establishment selling alcoholic beverages is located.

(2) No adult entertainment establishment shall be located within 1,000 feet of any parcel of land upon which a residential dwelling unit is located, unless such dwelling unit is located within the boundaries of a C-3 zoning district.

(3) No adult entertainment establishment shall be located within 1,000 feet of any parcel of land upon which a church, cemetery, shrine, chapel of a mortuary, or other place used exclusively for religious services or meditation is located.

(4) No adult entertainment establishment shall be located within 1,000 feet of any regular stop or shelter where a bus used for the transportation of school students boards or discharges minors.

(5) No adult entertainment establishment shall be located within 1,000 feet of any parcel of land upon which a licensed day care center or nursing home is located.

(6) No adult entertainment establishment shall be located within 1,000 feet of any parcel of land upon which a public park or playground is located.

(7) No adult entertainment establishment shall be located within 1,000 feet of any parcel of land upon which a governmental building, library, or civic center is located, except where such building is located within the boundaries of a C-3 zoning district.

(8) All adult entertainment establishments shall comply with the following dimensional requirements:

(a) Minimum lot area: 43,560 square feet.

(b) Minimum frontage: 150 feet.

(c) Maximum lot coverage: 30 percent.

(d) Minimum lot width measured at the building line: 150 feet.

(9) All structures associated with adult entertainment establishments shall be located at least 30 feet from the nearest property line.

(10) All adult entertainment establishments shall be required to provide one off-street automobile parking space for each 25 square feet of gross building area or for every three customer seats, whichever results in the greater number of parking spaces.

(11) All adult entertainment establishments shall provide a special parking area visibly designated (either by painting or appropriate signage or both) for emergency vehicle

use only. Such exclusive emergency service area shall be at least 14 feet wide by 55 feet in length and shall be located as close as practicable to the main entrance(s) of the principal structure on the property.

(12) No adult entertainment establishment may sell, serve, or permit the consumption of intoxicating or alcoholic substances on the property.

(13) All adult entertainment establishments shall acquire and conspicuously post within the principal structure an adult entertainment establishment license as required by the Jones County Adult Entertainment Ordinance adopted June 16, 1993.

99.5. *Specific standards for adult dancing establishments.* Since adult dancing establishments and erotic dance establishments feature live erotic performances, special standards in addition to the requirements in section 99.4 above must be imposed to ensure the safety of all performers and to minimize contact with patrons that could result in or lead to criminal activity. Therefore, all erotic dance establishments must comply with the following performance standards:

(1) All dancing or other live erotic exhibitions shall be conducted on a special platform which must be raised at least two feet above the level of the floor from which patrons observe the performance.

(2) Each performance platform shall be designed to prohibit physical contact between patrons and the performer(s). Compliance with this requirement may be satisfied by either:

(a) Constructing a raised border around the dancing or performing area of the platform (on all sides of the platform which adjoin areas where patrons may view the performance) that is at least four feet in width and one foot high. The raised border shall be designed and distinctly marked to prohibit use during live erotic performances; or

(b) Constructing a 42-inch high metal or wooden fence or railing around the platform at least four feet from the outer edge of the performance platform. The fence or railing must be permanently attached to the floor and distinctly marked to prohibit access to the platform by patrons.

(Ord. No. 201203-2o, 3-20-2012)

ARTICLE X. EXCEPTIONS AND MODIFICATIONS

Section 101. Planned unit developments.

A proposed plan for a large scale development of a tract of land, which has a proposed design making it desirable to apply regulations more flexible than those contained in this resolution, may be submitted to the planning and zoning commission for consideration. Such proposed development may contain residential uses of various types and allied uses such as a shopping

center to service the development. Upon finding that the following conditions exist, the board of commissioners may, after a public hearing, consider such zoning amendments as may be necessary for the establishment of the plan.

101.1. *Conditions.* The following conditions must be met in order for the rezoning of property to the PUD classification to be considered:

101.11. The tract of land to be developed must be at least 50 acres.

101.12. The proposed development must not be allowable under any other single zoning district, because of lot area requirements, dimensional standards, or use regulations.

101.13. Where desirable, adequate properly located areas are reserved for public uses such as schools, parks, and playgrounds.

101.14. The property adjacent to the area included in the development must not be adversely affected.

101.15. The site must have a minimum width between any two boundary lines of 450 feet and must adjoin or have direct access to at least one arterial or collector street.

101.16. The request for rezoning to a PUD zoning classification and any development plan proposed in connection with a planned unit development must be submitted by all owners of the property proposed for the planned unit development.

101.2. *Procedure for approval of a planned unit development district.* The filing of a plan for a planned unit development shall constitute a request for an amendment to this resolution and shall meet the requirements specified in article XV of this resolution. In addition, the following regulations shall apply:

101.21. Two copies of a preliminary site plan shall be submitted to the planning and zoning commission.

101.22. The planning and zoning commission shall review the proposal prior to submitting a recommendation to the board of commissioners. The planning and zoning commission may recommend reasonable additional requirements which may be imposed by the board of commissioners, including, but not limited to: utilities, drainage, landscaping and maintenance thereof, lighting, signs and advertising devices, screening accessways, curb cuts, traffic control, height of buildings, and setback of buildings, to protect adjoining residential lots or uses, or to protect the planned unit development from adjacent uses.

101.23. Approval by the board of commissioners subsequent to a public hearing constitutes creation of the planned unit development district.

101.3. *Preliminary site plan required.* In addition to information required for a preliminary plat by the subdivision regulations contained in this resolution, the preliminary site plan which accompanies an application for rezoning to a PUD classification shall include the following items. The planning and zoning commission may establish

additional requirements for the preliminary site plan and may, in extraordinary cases, waive a particular requirement if, in its opinion, the fulfillment of that requirement is not necessary for a proper decision on the project:

(1) The proposed title of the project and the name of the engineer, architect, designer or landscape architect, and the development.

(2) Existing zoning and zoning district boundaries and proposed changes in zoning.

(3) The location and size of existing and proposed streets, alleys, driveways, curb cuts, entrances and exits, parking and loading areas, including the number of parking and loading spaces, and outdoor lighting systems.

(4) Location, height, and material of all fences, walls, screens, plants, and landscaping.

(5) Proposed location, height, intended use, and character of all buildings.

(6) Location, character, size, and height and orientation of proposed signs.

(7) A tabulation of the total number of acres in the project, gross and net, and the percentage thereof proposed to be devoted to different dwelling types, commercial uses, other nonresidential uses, off-street parking, streets, parks, schools, and other public and private reservations.

(8) A tabulation of the total number of dwelling units of various types in the project and the overall project density in dwelling units per acre, gross and net.

(9) A general description of the proposal, stating the purpose and goals of the development, and the design features incorporated for meeting these goals. This description shall include a discussion of the proposed standards for development, including restrictions on the use of the property, density standards, yard requirements, and restrictive covenants.

101.4. *Final plat required.* A final plat shall be recorded prior to submission of an application for a building permit. The plat shall comply with all laws, regulations, and resolutions governing the approval of subdivisions and, in addition, shall show all the features required on the preliminary site plan. A plat of development shall be recorded regardless of whether a subdivision is proposed. At least one of the final site plan maps shall include topographical contour lines at intervals no less than five feet.

101.5. *Review standards.* The planning and zoning commission and board of commissioners shall review and decide upon plans for proposed planned unit developments in light of conformity with the comprehensive plan. Specifically, the proposed plan shall meet the following conditions:

101.51. The plan shall provide for appropriate relationships between uses around the boundaries and uses within the PUD, and shall indicate in written form those measures which would be taken to ensure that adjacent property will not be adversely affected, and the PUD will be similarly protected.

101.52. The plan shall conform to the purpose of this resolution as stated in article I.

101.53. The plan shall include access to all developed property sufficient to provide for an acceptable level of fire protection.

101.6. *Miscellaneous provisions.*

101.61. *Amendments and additions.* Amendments or additions to an approved plan, or to the boundaries of a PUD district, shall be accomplished subject to the same regulations and procedures applicable to a new application.

101.62. *Deed restrictions.* The planning and zoning commission may require filing of deed restrictions to help carry out the intent of this resolution.

101.7. *Site design requirements.*

101.71. *Site design, general.* The proposed development must be designed so as to produce an environment of stable and desirable character not out of harmony with its surrounding neighborhoods. The reviews by the planning and zoning commission and the board of commissioners shall consider the following design elements:

101.71.1. *Privacy.* Personal and individual privacy shall be maintained and balanced with the provision of public and common areas.

101.71.2. *Variety.* Interest and variety shall be sought by means of street design, changes in mixtures of building types, heights, facades, setbacks, plants, or size of open space. The design should be harmonious as a whole and not simply from street-to-street.

101.71.3. *Traffic and parking.* No through or commercial traffic should be permitted; streets should not be straight for long distances, but should curve so as to discourage fast movement of traffic; group parking areas should be screened as defined in section 67, so that the vehicles are substantially hidden from the street.

101.71.4. *Lot area and lot width, general.* Minimum average lot area for each category of dwelling unit (e.g., single-family, two-family, multifamily) shall be equal to the minimum requirements applicable in an R-3 district. Minimum lot area and lot width requirements may be increased by the county health department when the said department determines that an increased area or width is necessary for health reasons.

101.72. *Site design, detail.* The following standards shall be met:

101.72.1. *Open space.* A minimum of at least 20 percent of the gross area of the site should be retained as open space.

101.72.2. *Building coverage.* The total ground area occupied by buildings and structures shall not exceed 30 percent of the total ground area of the planned unit development. Building coverage is defined as the land area covered by dwellings, balconies, porches, and other architectural projections, but not including roof overhangs, open balconies, and uncovered porches.

101.72.3. *Building heights.* Height of particular buildings shall not be basis for denial or approval of a plan; provided any structures in excess of 35 feet shall be designed and platted to be consistent with the reasonable enjoyment of neighboring property and the efficiency of existing public services and facilities.

101.72.4. *Density of retail and service uses.* No more than five percent of the floor space in the planned unit development shall be used for retail or service establishments.

101.72.5. *Street standards.* All streets located in PUD districts shall be Class I streets.

101.72.6. *Off-street parking and loading.* Off-street parking and loading requirements shall be as required in sections 62 and 63.

(Ord. No. 201203-2o, 3-20-2012)

Section 102. Yard requirements.

Yard requirements shall be modified subject to the following conditions:

102.1. On double frontage lots, the required front yard shall be provided on each street.

102.2. Whenever a rear property line of a lot abuts upon an alley, one-half of the alley width shall be considered as a portion of the required rear yard.

102.3. An unroofed porch may project into a required front yard for a distance not exceeding ten feet.

102.4. The front and side yard requirements may be waived where dwellings occupy space above commercial uses upon approval of the board of appeals and adjustments.

(Ord. No. 201203-2o, 3-20-2012)

Section 103. Access to public streets.

Access to public streets shall be maintained in accordance with the following requirements:

103.1. Each principal use shall be located on a lot or parcel which provides frontage on a public street having a right-of-way of not less than 30 feet, except as otherwise provided herein.

103.2. Any additional dwelling shall have access to a public street by means of a passageway open between ground and sky at least 20 feet in width.

(Ord. No. 201203-2o, 3-20-2012)

Section 104. Front and side yard setbacks for dwellings.

The setback requirements of this resolution for side yards on corner lots and front yards shall not apply to any lot where the average setback on developed lots located, wholly or in part, within 100 feet on each side of such lot and within the same block and zoning district and

fronting on the same streets as such lot is less than the minimum required setback. In such cases, the setback on such lot may be less than the required setback, but not less than the average of the existing setbacks on the existing developed lots.
(Ord. No. 201203-2o, 3-20-2012)

Section 105. Underground buildings.

Yard and lot coverage requirements for buildings located totally or partially below ground level shall be modified subject to the following conditions:

105.1. If any portion of the structure extends above the ground, that portion above the ground must comply with the yard and lot coverage requirements of the district in which it is located.

105.2. If the structure is completely underground, it need not comply with the yard and lot coverage requirements of this resolution.
(Ord. No. 201203-2o, 3-20-2012)

Section 106. Site built homes.

106.1. A site built home shall be oriented with its long axis parallel to the street on which the lot fronts. An exception may be granted on lots where the slope requires one or more foundation pier(s) to exceed 44 inches in height; in which case, the site built home shall be placed perpendicular to the street. If the home is located in excess of 300 feet from any public road right-of-way it may face in any direction. The preceding exceptions may be granted by the zoning enforcement officer after verification.
(Ord. No. 201203-2o, 3-20-2012)

ARTICLE XI. ZONING ADMINISTRATION

Section 111. Duties and powers of the zoning enforcement officer.

The zoning enforcement officer shall be any person designated by the board of commissioners of Jones County to administer the provisions of this resolution and shall have the following duties and powers:

111.1. The zoning enforcement officer is authorized and empowered on behalf of and in the name of the board of commissioners to administer and enforce the provisions of this resolution to include receiving applications, inspecting premises, and issuing zoning compliance permits, conditional use permits, and certificates of occupancy for uses and structures which are in conformance with the provisions of this resolution. The zoning enforcement officer or his duly authorized representative may enter any building, structure, or premises to perform any duty imposed upon him by this resolution.

111.2. The zoning enforcement officer does not have the authority to take final action on applications or matters involving variances, nonconforming uses, conditional uses, or other exceptions which this resolution has reserved for public hearings before the board of appeals and adjustments, the historic preservation commission, the planning and zoning commission, or the board of commissioners.

111.3. The zoning enforcement officer shall keep records of any and all permits, certificates of occupancy issued, and all submitted subdivision plats, with notations of all special conditions involved. He shall file and safely keep copies of all sketches and plans submitted, and the same shall form a part of the records in his office and shall be made a public record.

111.4. The zoning enforcement officer shall assign a street number to each lot in a proposed subdivision at the time of preliminary plat approval. Said numbers shall be recorded upon copies of the preliminary plat returned to the subdivider and retained by the zoning enforcement officer and planning and zoning commission.

111.5. The zoning enforcement officer shall ensure that proper notice of actions of the planning and zoning commission and board of commissioners is given. It shall be the responsibility of the zoning enforcement officer to inform the planning and zoning commission and the board of commissioners of preliminary plats and final plats approved administratively.

(Ord. No. 201203-2o, 3-20-2012)

Section 112. Permits and certificates.

Permits and certificates shall be issued in accordance with the following provisions:

112.1. *Zoning compliance permit.* The zoning enforcement officer shall issue a zoning compliance permit, which may be incorporated into the building permit, for any permitted use of land or a structure or structural alteration, provided such proposed use of land or a structure or structural alteration is in conformance with the provisions of this resolution.

112.10. An application for a zoning compliance permit, which may be incorporated into the building permit, shall be accompanied by written approval from the Jones County Health Department certifying the suitability of the site for the installation of a sewage and waste management system, and a driveway permit obtained from the board of commissioners.

112.11. An application shall be accompanied by two copies of a dimensional sketch or a to-scale plan, signed by the owner or his authorized agent, to include, as a minimum, the following:

(1) Lot dimensions with property line monuments located thereon.

(2) The shape, size, height, uses, and locations of the buildings proposed to be erected, demolished, altered, or moved, and of any buildings already on the lot, yard dimensions, and the uses of structures, including the number of dwelling units within each structure, when appropriate.

(3) Public and private easements, watercourses, and fences existing on the lot.

(4) Street names and street right-of-way lines.

(5) If the proposed use is or includes an outdoor advertising sign, a sketch showing the dimensions of the sign and the position of the sign in relation to nearby buildings or structures, and to nearby streets, and plans, specifications and structural details of construction on the ground.

(6) Such other information regarding abutting property as directly affects the application.

112.12. Each permit shall be conspicuously posted and displayed on the premises described in the permit during the period of construction or reconstruction.

112.13. If the proposed excavation, filling, construction, movement, or use set forth in said application are in conformity with the provision of this resolution and other appropriate codes and resolutions of the board of commissioners then in effect, or if a variance from the provisions of this resolution has been granted pursuant to section 114.2, the zoning enforcement officer shall sign and return one copy of the sketch plan to the applicant and shall issue a zoning compliance permit. The zoning enforcement officer shall retain one copy of the zoning compliance permit and one copy of the sketch or plan for his records.

112.14. If the application submitted describes work or uses which do not conform to the requirements of this resolution, the zoning enforcement officer shall not issue a zoning compliance permit, but shall return one copy of the sketch or plan to the applicant along with a signed refusal in writing. Such refusal shall state the reasons for refusal and shall cite the portions of this resolution with which the submitted sketch or plan does not comply. The zoning enforcement officer shall retain one copy of the sketch or plan and two copies of the refusal.

112.15. Any zoning compliance permit shall automatically expire six months from the date of issuance if the person, firm, or corporation to which the permit was issued has not clearly demonstrated that the permit is being exercised for the purpose for which it was issued, or if the work so authorized is suspended or discontinued for a period of one year.

112.2. *Conditional use permit.* The zoning enforcement officer shall issue a conditional use permit, which may be incorporated into the building permit, for any conditional use of land or a structure or structural alteration of a conditional use, provided such proposed

use has been approved by the board of commissioners and such proposed use of land or a structure or structural alteration is in conformance with the provisions of this resolution.

112.20. An application for a conditional use permit, which may be incorporated into the building permit, shall be accompanied by written approval from the Jones County Health Department certifying the suitability of the site for the installation of a sewage and waste management system.

112.21. An application shall be accompanied by two copies of a dimensional sketch or to-scale plan, signed by the owner or his authorized agent, to include as a minimum, the following:

(1) Lot dimensions with property line monuments located thereon.

(2) The shape, size, height, uses, and location of the building proposed to be erected, demolished, altered, or moved, and of any buildings already on the lot, yard dimensions, and the uses of structures, including the number of dwelling units within each structure, when appropriate.

(3) Public and private easements, watercourses, and fences existing on the lot.

(4) Street names and street right-of-way lines.

(5) Such other information regarding abutting property as directly affects the application, including a list of the names and mailing addresses of all owners of property within 200 feet of the property for which the application is submitted, as shown on the county property tax records or as known to the applicant.

112.22. Each permit shall be conspicuously posted and displayed on the premises described in the permit during the period of construction or reconstruction.

112.23. If the proposed excavation, filling, construction, movement or use set forth in said application are in conformity with the provisions of this resolution and other appropriate codes and resolutions of the board of commissioners then in effect, or if a variance from the provisions of this resolution has been granted pursuant to section 114.2, and if the proposed conditional use has been approved by the board of commissioners, the zoning enforcement officer shall sign and return one copy of the sketch plan to the applicant and shall issue a conditional use permit. The zoning enforcement officer shall retain one copy of the conditional use permit and one copy of the sketch or plan for his records.

112.24. If the application submitted describes work or uses which do not conform to the requirements of this resolution, or if the application for a conditional use is disapproved by the board of commissioners, the zoning enforcement officer shall not issue a conditional use permit, but shall return one copy of the sketch or plan to the applicant, along with a signed refusal in writing. Such refusal shall state

the reasons for refusal and shall cite the portions of the resolution with which the submitted sketch or plan does not comply, if applicable. The zoning enforcement officer shall retain one copy of the sketch or plan and two copies of the refusal.

112.25. Any conditional use permit shall automatically expire six months from the date of issuance if the person, firm, or corporation to which the permit was issued has not clearly demonstrated that the permit is being exercised for the purpose for which it was issued. Any conditional use permit shall automatically expire if construction work authorized by the permit is suspended or discontinued for a period of one year, or if a use so authorized is discontinued for a period exceeding 60 days.

112.3. *Certificate of occupancy.* Certificates of occupancy shall be issued by the zoning enforcement officer in accordance with the following provisions:

112.31. *Certificate of occupancy required.* A certificate of occupancy is required in advance of occupancy or use of:

(1) A building hereafter erected;

(2) A building hereafter altered so as to affect height, or side, front or rear yards;

(3) A change of type of occupancy or use of any building or premises.

112.32. *Issuance of certificate of occupancy.* The zoning enforcement officer shall sign and issue a certificate of occupancy if the proposed use of land or of a structure, as stated on the application for such certificate and certified thereto by the owner or his authorized agent, is found to conform to the applicable provisions of this resolution, and any structure, as finally constructed, complies with the sketch plan upon which the zoning compliance permit or conditional use permit was issued.

112.33. *Denial of certificate of occupancy.* A certificate of occupancy shall not be issued unless the proposed use of a structure or land conforms to the applicable provisions of this resolution, or unless the structure, as finally constructed, complies with the sketch plan upon which the zoning compliance permit or conditional use permit was issued.

(Ord. No. 201203-2o, 3-20-2012)

Section 113. Establishment of the board of appeals and adjustments.

The board of appeals and adjustments of the unincorporated area of Jones County, Georgia is hereby established.

113.1. *Membership.* The board of appeals and adjustments shall consist of five members appointed by the board of commissioners of Jones County, Georgia, for overlapping terms of five years.

113.11. *Initial appointment.* The initial appointment of the board of appeals and adjustments shall be as follows: one member for one year, one member for two years, one member for three years, one member for four years, and one member for five years.

113.12. *Vacancies.* Any vacancy in the membership shall be filled for the unexpired term in the same manner as the initial appointment. Members may be removed for cause by the board of commissioners upon written charges, and after a public hearing thereon.

113.13. *Public offices held.* No member shall hold any other public office or position, except that one member may be a member of the planning and zoning commission.

113.2. *Rules and procedures.* The board of appeals and adjustments shall observe the following procedures:

113.21. Said board shall adopt rules in accordance with the provisions of this resolution for the conduct of its affairs.

113.22. Said board shall elect one of its members, other than a member of the planning and zoning commission, as chairman, who shall serve for one year or until he is reelected or his successor is elected. Said board shall appoint a secretary.

113.23. The meetings of said board shall be held at the call of the chairman and at such other times as said board may determine. The chairman, or in his absence, the acting chairman, may administer oaths and compel the attendance of witnesses by subpoena.

113.24. All meetings of said board shall be open to the public.

113.25. Said board shall keep minutes of its proceedings, showing the vote of each member upon each question, or if absent or failing to vote, indicating such fact, and shall keep records of its examinations and other official actions, all of which shall be immediately filed in the office of the zoning enforcement officer and shall be a public record.

(Ord. No. 201203-2o, 3-20-2012)

Section 114. Duties and powers of the board of appeals and adjustments.

The board of appeals and adjustments shall have the following duties and powers relative to the administration of the provisions of this resolution:

114.1. *Appeals of administrative decisions.* To hear and decide appeals where it is alleged there is error in any order, requirement, decision, or determination made by the zoning enforcement officer, or other administrative officials, in the enforcement of this resolution.

114.2. *Variances.* The board of appeals and adjustments may authorize in specific cases such variance from the terms of this resolution as will not be contrary to the public interest where, owing to special conditions, a literal enforcement of the provisions of this resolution will, in an individual case, result in unnecessary hardship, so the spirit

of this resolution shall be observed, public safety and welfare secured, and substantial justice done. Such variance may be granted in such an individual case of unnecessary hardship upon a finding by the board of appeals and adjustments that:

114.21. There are extraordinary and exceptional conditions pertaining to the particular piece of property in question because of its size, shape, or topography; and

114.22. The application of this resolution to this particular piece of property would create an unnecessary hardship; and

114.23. Such conditions are peculiar to the particular piece of property involved; and

114.24. Relief, if granted, would not cause substantial detriment to the public good or impair the purpose and intent of this resolution.

114.3. *Use variance prohibited.* Said board may not grant any variance for a use of land or premises.

(Ord. No. 201203-2o, 3-20-2012)

Section 115. Procedure for appeal of an administrative decision before the board of appeals and adjustments.

Requests for a hearing before the board of appeals and adjustments in cases where it is alleged that there is error in any order, requirement, decision, or determination made by the zoning enforcement officer or other administrative official in the enforcement of the provisions of this resolution shall observe the following procedures:

115.1. *Request for hearing.* An applicant alleging error in the enforcement of the provisions of this resolution shall submit to the zoning enforcement officer a written notice of appeal, specifying the action or actions challenged and specifying the grounds of said appeal, and any supporting materials relevant to the appeal. An appeal may be withdrawn by the appellant upon written notice at any time before final decision on said appeal.

115.2. *Effect on legal proceedings.* An appeal stays all legal proceedings in furtherance of the action appealed, unless the zoning enforcement officer certifies to the board of appeals and adjustments that, by reason of facts stated in the certification, a stay would, in his opinion, cause imminent peril to life and property. In such case, proceedings shall not be stayed except by a restraining order which may be granted by said board or by a court of competent jurisdiction, on application, on notice to the official from whom the appeal is taken, and on due cause shown.

115.3. *Referral to the board of appeals and adjustments.* Upon receipt of a notice of appeal, the zoning enforcement officer shall inform the chairman or acting chairman of the board of appeals and adjustments of the appeal. The chairman or acting chairman shall set a time and date, not more than 45 days from the date of receipt of the notice of appeal, for a hearing upon said appeal, and direct the zoning enforcement officer to notify the appellant of such hearing.

115.4. *Notification.* Upon the establishment of a hearing date upon an appeal, the zoning enforcement officer shall notify by mail the appellant of the time, date, and place of the hearing upon said appeal. Such notification shall be mailed not less than 15 days prior to the hearing.

115.5. *Hearing and decision.* The following provisions shall apply to hearings upon appeals of actions taken in the enforcement of the provisions of this resolution:

115.51. The board of appeals and adjustments shall hear and decide upon appeals in accordance with section 113.2 of this resolution.

115.52. All applications, plans, correspondence, supporting materials, or other materials relevant to the appeal and maintained in the records of the zoning enforcement officer shall be provided to the board and shall be a part of the record of the appeal.

115.53. Any decision made by the board of appeals and adjustments upon an appeal shall be reduced to writing and served upon the appellant, and shall be made a public record and maintained in the office of the zoning enforcement officer.

(Ord. No. 201203-2o, 3-20-2012)

Section 116. Procedure for application for a variance from the provisions of this resolution.

The following procedure shall be followed for an application for a variance from the provisions of this resolution:

116.1. *Application.* An application for a variance from the provisions of this resolution must be submitted to the zoning enforcement officer in writing on forms supplied by the zoning enforcement officer. Such application materials and site plan shall clearly indicate all elements of the proposed use for which a variance is sought and include a statement of the reason or reasons that a variance is required. An application may be withdrawn by the applicant upon written notice any time before the decision regarding said application. Any proposed variance from the provisions of this resolution must be submitted by the property owner, or a notarized statement signed by the property owner consenting to the requested variance, must be provided at the time of application submittal.

116.2. *Referral to board of appeals and adjustments.* Upon receipt of an application for a variance from the provisions of this resolution, the zoning enforcement officer shall inform the chairman or, in his absence, acting chairman of the board of appeals and adjustments of the application. The chairman or acting chairman shall set a time and date, not more than 45 days from the date of application, for a hearing on said application, and direct the zoning enforcement officer to initiate notification procedures required under this section.

116.3. *Notification.* The zoning enforcement officer shall notify neighboring property owners and the general public of any application for a variance from the provisions of this resolution in accordance with the following procedures:

116.31. Upon the establishment of a hearing date for any application for a variance, the zoning enforcement officer shall attempt to notify by mail all owners of property lying within 200 feet of the property for which the application is filed. Such notification shall include the nature of the application, the time, date, and place of the hearing upon said application, and the address and telephone number of the zoning enforcement officer, should additional information be required. Such notification shall be mailed not less than 15, nor more than 45 days prior to the hearing. Any errors or omissions that may occur in regard to this section shall not impact the decision made by the board of appeals and adjustments.

116.32. Upon the establishment of a hearing date for any application for a variance, the zoning enforcement officer shall cause to have posted in a conspicuous place on the property in question one or more signs, containing the date, time, and place of the hearing, and the address and telephone number of the zoning enforcement officer for further information. Such sign or signs shall be posted not less than 15, nor more than 45 days prior to the hearing.

116.33. Upon the establishment of a hearing date for any application for a variance, the zoning enforcement officer shall notify by mail the applicant of the time, date, and place of the hearing upon said application. Such notification shall be mailed not less than 15 days prior to the hearing.

116.4. *Hearing and decision.* The following provisions shall apply to hearings upon applications for a variance from the provisions of this resolution:

116.41. The board of appeals and adjustments shall hear and decide upon applications for variances in accordance with sections 113.2 and 114.2 of this resolution.

116.42. In response to comments by persons appearing at the hearing or to recommendations by the board of appeals and adjustments, the applicant may agree to modify his application, including any plans or specifications submitted. Unless such modifications are so substantial that the board determines that revised plans are necessary for adequate consideration of the application, the board may approve the application with the stipulation that the permit or certificate shall not be issued until plans reflecting the agreed upon changes are submitted to the zoning enforcement officer.

116.43. Any decision made by the board of appeals and adjustments upon an application for a variance shall be reduced to writing and served upon the applicant and shall be made a public record and maintained in the office of the zoning enforcement officer. Such decisions shall be made within 30 days of the final hearing on the matter.

116.44. Whenever an application for a variance is denied, the board of appeals and adjustments shall not consider any further application for the same variance on the same property or any part thereof for a period of six months from the date of final denial. An application for a variance which is essentially the same as one previously denied shall be considered as being for the same variance as was previously denied.

116.45. Any person, firm, or corporation whose application has been previously and finally disapproved may, within 30 days from the date of final disapproval, move for a rehearing by the board of appeals and adjustments. All motions for a rehearing by the board shall be written and presented to the zoning enforcement officer, and no hearing shall be held on such motion. No motion for rehearing shall be considered unless new or additional information not available at the time of the original hearing or not presented due to excusable neglect is available. A denial of this motion is a final action. The granting of this motion shall require a new hearing and a new process of notification as if the application were considered for the first time.

116.46. Any variance approval shall automatically expire one year from the date of the approval by the board of appeals and adjustments if the person, firm, or corporation to which the variance was granted has not clearly demonstrated that the approval is being exercised for the purpose for which it was issued. If any use of land or structure authorized by variance is suspended or discontinued for any reason, it will be treated as an existing nonconforming use and any resumption of the use of land or structure must comply with section 61. This section shall not apply to approvals granted prior to the adoption of this resolution.

(Ord. No. 201203-2o, 3-20-2012)

Section 117. Procedure for application for a conditional use.

The following procedure shall be followed for applications for conditional use permits:

117.1. *Application.* An application for a conditional use permit shall be submitted to the zoning enforcement officer in writing on forms supplied by the zoning enforcement officer. Applications for a preliminary or final conditional use permit shall include the information specified in section 112.2. Any conditional use application must be submitted by the property owner, or a notarized statement signed by the property owner consenting to the requested conditional use, must be provided at the time of application submittal.

117.11. *Inspection.* The zoning enforcement officer shall inspect the application for completeness at the time of submittal. If the application is found to be complete, the application will be submitted to the planning and zoning commission. If the application is found to be incomplete, the application will be returned to the applicant with a written statement that cites the portion or portions of this resolution with which the application does not comply.

117.12. *Supplemental documentation provided by the applicant.* The applicant may provide additional documentation for consideration no later than ten days prior to the hearing before the planning commission. After ten days prior to the hearing before the planning commission, the only additional documentation that will be accepted is in response to a specific request for additional information by the zoning enforcement officer, the planning commission, or the board of commissioners. This restriction shall not apply to additional information provided by the applicant that addresses documentation that has been submitted by opponents of the application.

117.2. *Submittal to planning and zoning commission.* Upon receipt of an application for a conditional use, the zoning enforcement officer shall cause the applications to be placed upon the agenda of the next meeting of the planning and zoning commission for which notification requirements can be met. The zoning enforcement officer shall initiate notification procedures required under this section.

117.3. *Notification.* The zoning enforcement officer shall notify neighboring property owners and the general public of any application for a conditional use in accordance with the following procedures:

117.31. Upon the establishment of a hearing date for any application for a conditional use permit, the zoning enforcement officer shall attempt to notify by mail all owners of property lying within 200 feet of the property for which the application is filed. Such notification shall include the nature of the application, the time, date, and place of the hearing upon said application, and the address and telephone number of the zoning enforcement officer, should additional information be required. Such notification shall be mailed not less than 15, nor more than 45 days prior to the hearing. Any errors or omissions that may occur in regard to this section shall not impact the zoning decision.

117.32. Upon the establishment of a hearing date for any application for a conditional use permit, the zoning enforcement officer shall cause to have posted in a conspicuous place on the property in question one or more signs, containing the time, date, and place of the hearing, and the address and telephone number of the zoning enforcement officer for further information. Such sign or signs shall be posted not less than 15, nor more than 45 days prior to the hearing.

117.33. Upon the establishment of a hearing date for any application for a conditional use permit, the zoning enforcement officer shall cause to be published in a newspaper of general circulation in Jones County notice of said application. Such notice shall include the nature of the application, the time, date, and place of the hearing upon said application, and the address and telephone number of the zoning enforcement officer, should additional information be required. Such notice shall be published not less than 15, nor more than 45 days prior to the hearing.

117.34. Upon the establishment of a hearing date for any application for a conditional use permit, the zoning enforcement officer shall notify by mail the applicant of the time, date, and place of the hearing upon said application. Such notification shall be mailed not less than 15 days prior to the hearing.

117.4. *Hearing and decision.* The following provisions shall apply to hearings upon applications for a conditional use permit:

117.41. The planning and zoning commission shall make recommendations upon and the board of commissioners shall decide upon applications for conditional use permits using the following standards:

117.41.1. The proposed use or structure shall be compatible with development and uses existing on adjacent and nearby property.

117.41.2. The proposed use or structure shall not have a substantial adverse impact upon the existing use or usability of adjacent or nearby property.

117.41.3. The proposed use or structure shall not cause an excessive or burdensome use of existing streets, transportation facilities, utilities, schools, or other public facilities.

117.41.4. Whether the proposed development will conform with the duly adopted land use and/or other physical development plans or policies for the area.

117.41.5. Whether there are other existing or changing conditions affecting the use and development of the property which give supporting grounds for either approval or disapproval of the request.

117.42. The planning and zoning commission shall hear and make recommendations upon applications for conditional use permits. The planning and zoning commission shall keep minutes of its proceedings, showing the vote of each member upon each question, or if absent and failing to vote, indicating such fact, and shall keep records of its examinations and other formal actions. All records shall be kept in the office of the zoning enforcement officer and shall be open for public inspection. The following procedures shall govern public hearings involving conditional use requests:

117.42.1. *Matter presented.* A description of the proposed zoning decision shall be presented by the director of planning and zoning or his or her designee.

117.42.2. *Speakers.* Proponents of the proposed zoning decision shall have a minimum of ten minutes to present evidence, information, and/or argument supporting the proposed decision. Opponents of the proposed zoning decision shall likewise have a minimum of ten minutes to present evidence, information, and/or argument in opposition to the proposed decision. If the proponents or opponents cannot agree on an equitable distribution of the allotted ten minutes, then the chairman or his or her designee will determine how the time will be divided. In any event, every person who wishes to speak, whether in support, opposition, or otherwise, shall have a

minimum of one minute to speak. If either the proponents or the opponents of an application collectively take more than ten minutes, then the other's time shall be extended similarly if desired. The county attorney or some other designee of the chairman shall keep time.

117.42.3. *Decorum and order.* Each speaker shall speak only to the merits of the proposed zoning decision and shall address his or her comments to the commissioners. Each speaker shall refrain from making personal attacks or discussing facts or opinions which are irrelevant to the decision under consideration. The chairman may limit or refuse a speaker the right to continue if the speaker, after first being warned, continues to violate this paragraph. Nothing contained herein shall be construed as prohibiting the chairman from conducting the hearing in an orderly and decorous manner to assure that the public hearing on a proposed zoning decision is conducted fairly.

117.42.4. *Availability.* Written copies of these procedures shall be made available upon request to the director of planning and zoning.

117.43. Following a public hearing upon an application for a conditional use permit, the planning and zoning commission shall form a recommendation concerning the application and transmit it to the board of commissioners for final action. The board of commissioners shall consider and decide upon said application within 180 days following receipt of the recommendation of the planning and zoning commission.

117.44. In response to comments made by persons appearing at the hearing or to recommendations by the planning and zoning commission or board of commissioners, the applicant may agree to modify his application, including any plans or specifications submitted. Unless such modifications are so substantial that the planning and zoning commission or board of commissioners determines that revised plans are necessary for adequate consideration of the application, the board of commissioners may approve the application with the stipulation that the permit or certificate shall not be issued until plans reflecting the agreed upon changes are submitted to the zoning enforcement officer.

117.45. Any decision made by the board of commissioners upon an application for a conditional use permit shall be reduced to writing and served upon the applicant and shall be made a public record and maintained in the office of the zoning enforcement officer.

117.46. Whenever an application for a conditional use permit is denied, the board of commissioners shall not consider any further application for the same conditional use on the same property or any part thereof for a period of six months from the date of final denial. An application for a conditional use which is essentially the same as one previously denied shall be considered as being for the same conditional use as was previously denied.

117.47. Any person, firm, or corporation whose application has been previously and finally disapproved, may, within 30 days from the date of final disapproval, move that the board of commissioners authorize a rehearing and reconsider the application. All motions for a rehearing shall be written and presented to the zoning enforcement officer, and no hearing shall be held on such motion. No motion for rehearing shall be considered unless new or additional information not available at the time of the original hearing, or not presented due to excusable neglect, is available. A denial of this motion is final action. The granting of this motion shall require a new hearing and a new process of notification, as if the application were considered for the first time.

117.48. Unless otherwise specified by the board of commissioners at the time of approval, any conditional use approval shall automatically expire one year from the date of the approval by the board of commissioners if the person, firm, or corporation to which the conditional use was granted has not obtained a conditional use permit for the purpose for which it was issued. This section shall not apply to approvals granted prior to the adoption of this resolution.

(Ord. No. 201203-2o, 3-20-2012)

Section 118. Procedures and standards governing the adoption of a zoning ordinance or comprehensive land development resolution.

118.1. *Hearing procedures.* The following procedures shall govern all public hearings involving the adoption of a new zoning ordinance or comprehensive land development resolution:

118.11. *Matter presented.* A description of the proposed zoning decision shall be presented by the director of planning and zoning or his or her designee.

118.12. *Speakers.* Proponents of the proposed zoning decision shall have a minimum of ten minutes to present evidence, information, and/or argument supporting the proposed decision. Opponents of the proposed zoning decision shall likewise have a minimum of ten minutes to present evidence, information, and/or argument in opposition to the proposed decision. If the proponents or opponents cannot agree on an equitable distribution of the allotted ten minutes, then the chairman or his or her designee will determine how the time will be divided. In any event, every person who wishes to speak, whether in support, opposition, or otherwise, shall have a minimum of one minute to speak. If either the proponents or the opponents of an application collectively take more than ten minutes, then the other's time shall be extended similarly if desired. The county attorney or some other designee of the chairman shall keep time.

118.13. *Decorum and order.* Each speaker shall speak only to the merits of the proposed zoning decision and shall address his or her comments to the commissioners. Each speaker shall refrain from making personal attacks or discussing facts or opinions which are irrelevant to the decision under consideration. The chairman may limit or

refuse a speaker the right or continue if the speaker, after first being warned, continues to violate this paragraph. Nothing contained herein shall be construed as prohibiting the chairman from conducting the hearing in an orderly and decorous manner to assure that the public hearing on a proposed zoning decision is conducted fairly.

118.14. *Availability.* Written copies of these procedures shall be made available upon request to the director of planning and zoning.

118.2. *Standards governing the exercise of zoning powers.* The following standards shall govern the decision to adopt a new zoning ordinance or comprehensive land development resolution:

118.21. Whether the proposed zoning decision will permit a use of property that is suitable in view of the use and development of adjacent and nearby property;

118.22. Whether the proposed zoning decision will adversely affect the existing use or usability of adjacent or nearby property;

118.23. Whether the property to be affected by the proposed zoning decision has a reasonable economic use as currently zoned;

118.24. Whether the proposed zoning decision will result in a use which will or could cause an excessive or burdensome use of existing streets, transportation facilities, utilities, or schools;

118.25. Whether the proposed zoning decision is in conformity with the policy and intent of the land use plan; and

118.26. Whether there are other existing or changing conditions affecting the use and development of the property which give supporting grounds for either approval or disapproval of the proposed zoning decision.

(Ord. No. 2012-001, 2-21-2012)

ARTICLE XII. PROCEDURES FOR SUBDIVISION PLAT APPROVAL

Section 121. Platting authority.

The planning and zoning commission shall be the official platting authority.

(Ord. No. 201203-2o, 3-20-2012)

Section 122. Pre-application review.

Whenever the subdivision of a tract of land within the jurisdiction of the commission is proposed, the subdivider should consult early and informally with the zoning enforcement officer for advice and assistance. The subdivider may submit sketch plans and data showing existing conditions within the site and in its vicinity and the proposed layout and development of the subdivision. The zoning enforcement officer shall return within 15 days the submitted

sketch plans to the subdivider, and shall inform the subdivider of any aspects of the plans that do not comply with the regulations set forth in this resolution. No fee shall be charged for the pre-application review, and no formal application shall be required.
(Ord. No. 201203-2o, 3-20-2012)

Section 123. Procedure for preliminary plat approval.

Prior to the cutting or grading of any street or the making of any street improvements or the installation of utilities, the subdivider shall submit to the commission a preliminary plat of the proposed subdivision in accordance with the following procedures:

123.1. *Application for preliminary plat approval.* Following the pre-application review of a proposed subdivision, the subdivider shall submit to the zoning enforcement officer a complete application for review and approval of a preliminary plat.

123.11. If the property being subdivided does not abut any part of the state highway system, the subdivider shall submit to the zoning enforcement officer an application for approval of preliminary plat, and four copies of the preliminary plat and other documents, as specified in section 124 herein. The planning and zoning commission shall act on the preliminary plat at its next regular meeting no less than ten calendar days from the date of receipt of a complete application by the zoning enforcement officer.

123.12. If the property being subdivided abuts any part of the state highway system, the subdivider shall submit to the zoning enforcement officer an application for approval of preliminary plat and seven copies of the preliminary plat and other documents, as specified in section 124 herein. The zoning enforcement officer shall forward three copies of the preliminary plat and other documents to the Georgia Department of Transportation District Office for review and approval, or disapproval, in accordance with the O.C.G.A. § 32-6-151. The commission shall act on the preliminary plat at its next regular meeting no less than ten calendar days from the date of receipt of a complete application by the zoning enforcement officer, or at the next regular meeting of the planning and zoning commission no less than ten calendar days from the date of receipt of the decision of the Georgia Department of Transportation by the zoning enforcement officer, whichever is later. Applications for preliminary plat approval for subdivisions of property abutting the state highway system that do not include all of the above items shall not be considered complete. Approval of a subdivision plat does not relieve the subdivider of the requirement to obtain a commercial driveway permit from the Georgia Department of Transportation.

123.2. *Georgia Department of Transportation recommendation.* In accordance with O.C.G.A. § 32-6-151, the zoning enforcement officer shall submit three copies of the preliminary plat to the Georgia Department of Transportation if the proposed subdivision includes or abuts on any part of the state highway system. The Department of Transportation, within 30 days of receipt of the plat, shall recommend approval or disapproval and note

its recommendation on the copy to be returned to the zoning enforcement officer. Failure of the department of transportation to act within this 30-day period shall constitute a recommendation for approval. If the plat is recommended for disapproval, the reasons for disapproval and requirements for approval shall be given to the zoning enforcement officer in writing; but such recommendations shall be advisory only and shall not be binding on the planning and zoning commission. Approval of a subdivision plat does not relieve the subdivider of the requirement to obtain a commercial driveway permit from the Georgia Department of Transportation.

123.3. *Notice of hearing.* Notice of the time and place of hearing shall be sent via certified mail to the address of the subdivider not less than five days before the date fixed therefore. It shall be the responsibility of the zoning enforcement officer to send said notice.

123.4. *Review of preliminary plat.* The zoning enforcement officer shall check the plat for conformance to the rules and regulations of this resolution and report his findings and recommendations to the planning and zoning commission, which shall afford a hearing on the preliminary plat.

123.41. *Preliminary approval.* Following the hearing of the preliminary plat and other related material, the planning and zoning commission may express preliminary approval, noting the conditions of such approval on four copies of the preliminary plat, with one copy being returned to the subdivider, one copy to the Jones County Health Department, and one copy to the zoning enforcement officer for the board of commissioners, and one copy to be added to the records of the planning and zoning commission. Approval of a preliminary plat does not constitute approval of a final plat. It indicates only approval of the layout as a guide to the preparation of the final plat.

123.42. *Expiration.* Preliminary approval shall expire and be of no further effect 12 months from the date of the preliminary approval, unless the time is extended by the planning and zoning commission.

123.43. *Disapproval.* Following the hearing of the preliminary plat and other related material, the planning and zoning commission may find conditions detrimental to the public safety, health and general welfare, or in conflict with adopted plans of the planning and zoning commission which require the disapproval of the preliminary plat. A statement of the reasons for disapproval shall be made on two copies of the preliminary plat with one copy being returned to the subdivider and one copy being added to the records of the planning and zoning commission. The applicant may reapply for preliminary plat approval in accordance with section 123.1 herein.

123.44. *Automatic approval.* Failure of the commission to act on the preliminary plat within the time frame specified in section 123.1, without due cause, shall be deemed to be approval of the plat and a certificate of preliminary approval shall

be issued by the planning and zoning commission on demand, provided, however, that the subdivider may waive this requirement and consent to an extension of time.

(Ord. No. 201203-2o, 3-20-2012)

Section 124. Preliminary plat specifications.

124.1. *Scale.* The preliminary plat shall be clearly and legibly drawn at a scale not smaller than 200 feet to one inch.

124.2. *Sheet size.* Sheet size shall not be greater than 18 inches by 24 inches. If the complete plat cannot be shown on one sheet of this size, it may be shown on more than one sheet with an index map on a separate sheet of a reduced scale.

124.3. *Ground elevations.* The preliminary plat shall show ground elevations based on the datum plane of the National Geodetic Survey.

124.31. For land that slopes less than approximately two percent, spot elevations shall be shown at all breaks in grade, along all drainage channels or swales, and at selected points not more than 100 feet apart in all directions.

124.32. For land that slopes more than approximately two percent, contours shall be shown with an interval of not more than five feet if the ground slope is regular or with an interval of not more than two feet if the ground slope is irregular.

124.33. A tie to one or more bench marks shall be shown.

124.34. An exception to the above requirements for showing ground elevation is a preliminary plat of a subdivision located in any subdivision with the average size of the lots being greater than one acre. A preliminary plat of such subdivisions shall show only the location of streams, both perennial and intermittent; direction of flow of these streams; any areas subject to flooding; and selected spot elevations.

124.4. *Information to be provided on preliminary plat.* The preliminary plat shall contain the following information:

(1) Name and address of owner of record and subdivider.

(2) Proposed name of subdivision and its acreage.

(3) North point and graphic scale and date.

(4) Vicinity map showing location and acreage of the subdivision.

(5) Exact boundary lines of the tract by bearings and distance.

(6) Names and owners of record of adjoining land with its approximate acreage.

(7) Existing streets, utilities and easements on and adjacent to the tract, including the size and width of each.

(8) Proposed layout including streets, alleys and easements and both dimensions and proposed street names; lot lines with approximate dimensions; land to be reserved or dedicated for public uses; and any land to be used for purposes other than single-family dwellings.

(9) Block letters and lot numbers.

(10) Provisions for water supply, sewerage and drainage, as required by Jones County Health Department and the Jones County Water Department, where applicable.

(11) Minimum building front yard setback lines.

(12) Such typical street cross sections and centerline profiles as may be required.

(13) Location of streams, lakes, swamps, and land subject to flooding as determined from past history of flooding.

(14) Location of land dedicated for a neighborhood park or open space area for subdivisions exceeding ten lots.

(15) Existing zoning district classification of the proposed subdivision and of adjoining properties.

(16) Inscription stating "NOT FOR FINAL RECORDING".

(17) A sketch plan of all future subdivisions contemplated by the subdivider within and adjacent to the tract of land for which this preliminary plat is submitted, as required by the zoning enforcement officer.

124.5. *Approval from the health department.* A signed certificate of approval of the Jones County Health Department shall be placed on the preliminary plat. Prior to approval from the Jones County Health Department, the subdivider shall present percolation test data results on each lot in the proposed subdivision, provided the lot size is not greater than three acres. The percolation tests and test borings shall be performed in accordance with the Georgia Department of Human Resources Manual for On Site Sewage Management Systems, section A - 290-5-26.10, when required.

124.6. *Certificate of preliminary approval.* A certificate of approval of the preliminary plat by the commission shall be inscribed on the plat as follows:

"In that all the requirements of Preliminary Approval having been fulfilled, this subdivision plat was given Preliminary Approval by the Jones County Planning and Zoning Commission on _____, 20____. The Preliminary Approval does not constitute approval of the Final Plat. This Certificate of Preliminary Approval shall expire and be null and void on _____, 20____."

Date	Zoning Enforcement Officer

124.7. *Initiation of installing physical improvements.* After receiving a certificate of preliminary plat approval by the planning and zoning commission, and prior to commencement of construction, a complete set of construction drawings shall be provided. The drawings shall contain at a minimum:

124.71. Existing conditions.

124.72. Overall site plan.

124.73. Grading and drainage plan.

124.74. Erosion and sedimentation control plan.

124.75. Typical street cross sections, intersection and curve design information and centerline profiles for all new streets.

124.76. Stormwater profiles.

124.77. Utility details.

124.78. Water distribution plan (if installing a water system).

124.79. Sewer plan (if installing a sewer system).

124.8 *Performance bond.* After the plans have been reviewed and approved by the zoning enforcement officer, the subdivider shall post a performance bond in the amount of five percent of the estimated total construction cost. The bond presented must be from a bonding company that has current approval from the Georgia Department of Transportation. Once the bond is posted the subdivider may then proceed to grade the streets and install all improvements required under this resolution and any other applicable regulations of the board of commissioners. If the developer fails to have any testing or inspections required by this resolution performed, the bond will be forfeited to the county. All required testing must be submitted to the zoning enforcement officer at the time of final plat approval. Once final plat approval is granted, if the bond has not been forfeited, it will be returned to the developer.
(Ord. No. 201203-2o, 3-20-2012; Min. of 1-7-2014)

Section 125. Final plat procedure.

After completion of the physical development of the subdivision or the posting of a performance bond, the subdivider shall submit to the planning and zoning commission a final plat in accordance with the following procedure:

125.1. *Application for final plat approval.* After the preliminary plat of a proposed land subdivision has been given preliminary approval by the planning and zoning commission, the subdivider may within one year or within such additional time as may be granted by the planning and zoning commission submit to the zoning enforcement officer the following items. The planning and zoning commission shall act on the final plat no less than ten days and no more than 30 days from the date of receipt of a complete application by the zoning enforcement officer.

125.11. A letter requesting review and approval of the final plat.

125.12. Five printed copies of the final plat with signed certifications and other documents as specified in section 126 herein.

125.13. A final plat filing fee of $3.00 per lot or a minimum fee of $10.00 for three lots or fewer shall be collected by the zoning enforcement officer at the time an application is made for final plat approval.

125.2. *Review of the final plat.* The zoning enforcement officer shall check the plat for conformance with the tentatively approved preliminary plat, and with regulations of this resolution.

125.21. *Notice of hearing.* Notice of time and place of hearing shall be sent by certified mail to the address of the subdivider not less than five days before the date fixed therefore. It shall be the responsibility of the zoning enforcement officer to send the said notice.

125.22. *Office approval.* The zoning enforcement officer may give final approval in the name of and on behalf of the planning and zoning commission, provided the final plat is the same as that granted preliminary approval by the planning and zoning commission, and that all conditions specified by the planning and zoning commission and specified herein have been met; and shall sign a certificate of approval on all printed drawings with two copies being returned to the subdivider, one copy to the Jones County Health Department, one copy to the office of the zoning enforcement officer for the board of commissioners, and one copy being added to the records of the planning and zoning commission. No final plat shall be approved by the zoning enforcement officer until the required certifications have been approved by the appropriate approving agents as required in section 126.

125.23. *Disapproval.* The planning and zoning commission or the zoning enforcement officer may find the final plat in conflict with the tentatively approved preliminary plat or with this resolution, requiring the disapproval of the final plat. A statement of the reasons for disapproval shall be placed on two copies of the final plat with one copy being returned to the subdivider and one copy being added to the records of the planning and zoning commission. No certificate of approval shall be given. The final plat may be resubmitted as a new application for final plat approval for hearing after the corrections noted by the planning and zoning commission are made.

125.24. *Automatic approval.* Failure of the planning and zoning commission to act on the final plat within 30 days after submission thereof shall be deemed to be approval of the plat and a certificate of final approval shall be issued by the planning and zoning commission on demand, provided, however, that the subdivider may waive this requirement and consent to an extension of time.

(Ord. No. 201203-2o, 3-20-2012)

Section 126. Final plat specifications.

126.1. *Conformance with the preliminary plat.* The final plat shall conform to the conditions of the tentatively approved preliminary plat.

126.2. *Original tracing specifications.* The final plat shall be clearly and legibly drawn on any acceptable tracing material as required by the office of the clerk of the superior court of Jones County. The scale shall not be smaller than 100 feet to the inch on a sheet size of not greater than 18 inches by 24 inches. If the complete plat cannot be shown on one sheet of this size, it may be shown on more than one sheet with an index map at a reduced scale.

126.3. *Additional specifications.* The final plat shall contain the following information:

(1) Name and address of owner of record and subdivider.

(2) North point and graphic scale and date.

(3) Vicinity map showing location and acreage of the subdivision.

(4) Names and owners of record of adjoining land with its approximate acreage.

(5) Location of streams, lakes, swamps, and land subject to flooding, as determined from past history of flooding.

(6) Bearings and distance to not less than three permanent points on the nearest existing street lines or bench marks or other permanent monuments shall be accurately described on the plat.

(7) Municipal and county lines shall be accurately tied to the lines of the subdivision by distance and bearing when such lines traverse or are reasonably close to the subdivision.

(8) The closest land-lot corner shall be accurately tied to the lines of the subdivision by distance and bearing.

(9) Land-lot and land-district number shall be shown.

(10) Exact boundary lines of the tract, determined by a field survey, giving distances to the nearest one-tenth-foot and angles to the nearest minute, shall be balanced and closed with an apparent error of closure not to exceed one in 5,000.

(11) Name of subdivision, exact locations, widths, and names of all streets and alleys within and immediately adjoining the new subdivision shall be shown on the plat.

(12) Street right-of-way lines shall show angles of deflection, angles of intersection, radii, and lines of tangents.

(13) Lot lines shall be shown with dimensions to the nearest one-tenth-foot and bearings in degrees and minutes.

(14) Lots shall be numbered in numerical order and blocks lettered alphabetically.

(15) Each lot shall have a street number, assigned by the zoning enforcement officer as provided in section 111.4.

(16) Location, dimensions, and purposes of any easements and any areas to be reserved or dedicated for the public use shall be shown on the plat.

(17) Accurate location, material, and description of monuments and markers, shall be described on the plat.

(18) Minimum building front yard setback lines shall be shown.

126.4. *Surveyor's certification.* A signed certification by a registered land surveyor certifying to the accuracy of the survey and the plat shall be placed on the final plat as follows:

"This map field data upon which this map or plat is based has a closure precision of one foot in _____ feet, and an angular error of _____ per angle point, and was adjusted using _____ rule."

"This map or plat has been calculated for closure and is found to be accurate within one foot in _____ feet."

By: _____

Georgia Registered Land Surveyor No. _____

126.5. *Owner's certification.* A signed certification of ownership shall be placed on the final plat as follows:

"Owner's Certification:

State of Georgia, County of Jones

The undersigned certifies that he is the owner of the land shown on this plat and acknowledges this plat and allotment to be his free act and deed and dedicates to public use forever all areas shown or indicated on this plat as streets, alleys, easements, or parks."

_____ _____

Date Owner's Name

126.6. *Health department certification.* A signed certification of the Jones County Health Department shall be placed on the final plat as follows:

"I certify that the general lot layout shown on this plat has been approved by the Jones County Health Department for development with _____. "

_____ _____

Date Director of Environmental Health

The blanks in the above certification statement shall be completed by the Director of Environmental Health, or his representative, so as to indicate whether approval is based upon the use of individual sewerage systems, individual water supplies, a community sewerage system, a community water supply or a combination thereof.

126.7. *Certification of approval by the board of commissioners.* A signed certification of the board of commissioners shall be placed on the final plat as follows:

"We certify that the owner, or his agent, has completed the construction and installation of the streets, drainage, utilities and other improvements in accordance with the laws and specifications of Jones County, Georgia; or has posted a performance bond in lieu thereof."

_____ _____

Date Zoning Enforcement Officer

(Ord. No. 201203-2o, 3-20-2012)

Section 127. Certificate of final approval by the planning and zoning commission.

Certification of final approval by the planning and zoning commission shall be placed on the final plat only after every item in section 125 and 126 of this resolution has been complied with, and shall state the following:

"I certify that all the requirements for final approval of this plat have been fulfilled in accordance with the Resolution of Jones County, Georgia, and the requirements of the Jones County Planning and Zoning Commission."

_____ _____

Date Chairman, Jones County Planning and Zoning Commission

(Ord. No. 201203-2o, 3-20-2012)

Section 128. Recording of final plat.

Upon the approval of a final plat by the planning and zoning commission, the owner, or his agent, shall have the final plat recorded in the office of the clerk of the superior court prior to the sale of any lot in the subdivision. Upon recording of the approved final plat, a copy of any private covenants or deed restrictions shall be provided by the subdivider for the records of the planning and zoning commission.

128.1. *Revisions to recorded plat.* The subdivider shall file with the planning and zoning commission copies of the proposed revision to a recorded plat, together with all supporting information as required by this resolution. Proposed revisions to a recorded plat which alter or change in any way the street and/or utility layout of said plat shall be submitted as a preliminary plat in accordance with section 123 of this resolution. Proposed revisions to a recorded plat which do not alter or change in any way the street and/or utility layout of said plat shall be submitted as a final plat in accordance with section 125 of this resolution. Notwithstanding the provisions stated elsewhere in this resolution, the zoning enforcement officer is hereby delegated the authority to give final approval or disapproval in the name of and on behalf of the commission, to applications for approval of a proposed revision to a recorded plat, provided that the said revision does not involve more than ten lots and that said revision does not alter or change in any way the street or utility layout of said plat. Where a revision to a

recorded plat involves ten or more lots, or a change in alteration of any street or utility layout of said plat, only the planning and zoning commission shall have the power to grant approval or disapproval for preliminary and final plats.

(Ord. No. 201203-2o, 3-20-2012)

Section 129. Subdivisions not exceeding ten lots.

Notwithstanding the provisions stated elsewhere in this resolution, the zoning enforcement officer is hereby delegated the authority to give preliminary and final approval in the name of and on behalf of the planning and zoning commission, to applications for approval of a new subdivision not exceeding ten lots in size, provided no new street, public or private, is involved; the required certifications have been approved by the appropriate agent; no variances are involved; and all the requirements set forth in this resolution are met.

(Ord. No. 201203-2o, 3-20-2012)

ARTICLE XIII. GENERAL REQUIREMENTS AND MINIMUM STANDARDS OF DESIGN FOR THE SUBDIVISION OF LAND

Section 131. General design requirements.

131.1. *Suitability of land.* Land subject to flooding, improper drainage, or erosion, or which is for topographical, geological or other reasons unsuitable for residential use, shall not be platted for residential use nor for any other uses that will continue to increase the danger to health, safety, or property destruction, unless the hazards can be and are corrected.

131.2. *Name of subdivision.* The name of the subdivision must have the approval of the planning and zoning commission. The name shall not duplicate nor closely approximate the name of an existing subdivision.

131.3. *Access.* Access to every subdivision shall be provided over a public street.

131.4. *Conformance to adopted major thoroughfare plans.* All streets and other features of the major thoroughfare plan of the City of Gray and County of Jones shall be platted by the subdivider in the location and to the dimension indicated on the major thoroughfare plan adopted by the planning and zoning commission or the board of commissioners.

131.5. *Through traffic.* Minor streets shall be so laid out that their use by through traffic will be discouraged.

(Ord. No. 201203-2o, 3-20-2012)

Section 132. General requirements for streets and other rights-of-way.

132.1. *Continuation of existing streets.* Existing streets shall be continued at the same or greater width, but in no case less than the required width.

132.2. *Connections with future subdivisions.* Streets shall be reserved at strategic locations to provide for future access to adjoining properties which may be subdivided in the future. Each street connection shall intersect property lines at a 90-degree angle.

132.3. *Street names.* Street names shall require the approval of the commission. Streets that are obviously in alignment with streets already in existence and already named shall be given the name of the existing street. Names of new streets shall not duplicate or closely approximate those of existing streets.

132.4. *Street jogs.* Street jogs with centerline offsets of less than 125 feet shall not be permitted.

132.5. *Cul-de-sacs.* Cul-de-sacs shall be provided at the closed end with a turnaround having a right-of-way radius of at least 60 feet with an outside pavement radius of at least 50 feet. The total right-of-way width, including turnarounds, shall be 60 feet, which shall include pavement of 20 feet and shoulders of eight feet regardless of the width of the right-of-way. Shoulders shall be suitable for use as emergency traffic lanes.

132.6. *Development along major street, limited-access highway or railroad right-of-way.* Where a subdivision abuts or contains an expressway, freeway, arterial or collector street, or a railroad right-of-way, the planning and zoning commission may require a street approximately parallel to and on each side of such right-of-way either as a marginal access street, or at a distance suitable for an appropriate use of intervening land, with a nonaccess reservation suitably planted. Due regard should be given to requirements for approach grades and future grade separations in determining distances. Lots shall have no access to expressways, freeways, or arterial streets, in which case the planning and zoning commission may require double frontage lots.

132.7. *Half streets.* Half streets shall be prohibited except where essential to the reasonable development of the subdivision in conformity with the other requirements of these regulations. Where the planning and zoning commission finds it will be practicable to require the dedication of the other half when the adjoining property is subdivided, the other half of the street shall be platted within such tract.

132.8. *Alleys.* The requirements for providing alleys within a subdivision are as follows:

132.81. Alleys shall be provided in multifamily, commercial, and industrial districts, except where other definite and assured provision is made for service access such as off-street parking, loading and unloading consistent with and adequate for the uses proposed.

132.82. Alleys shall not be provided in one and two-family residential developments unless the subdivider provides evidence satisfactory to the planning and zoning commission of the need for alleys.

132.83. Dead-end Alleys should be avoided where possible, but if unavoidable, shall be provided with adequate turnaround facilities at the dead end, as determined by the planning and zoning commission.

132.9. *Reserve strips and easements.*

132.91. Reserve strips controlling the access to streets shall be prohibited except where this control is definitely placed in the hands of the board of commissioners under conditions approved by the planning and zoning commission. The planning and zoning commission may control access to expressways, freeways, and arterial and collector streets by requiring all lots to face and have access to only minor streets.

132.92. Easements having a minimum width of ten feet and located along the side or rear lot lines shall be provided, as is necessary, for utility lines and underground mains and cables. Where a subdivision is traversed by a watercourse, drainage way, channel, or streams, there shall be provided a stormwater or drainage easement or right-of-way to adequate width. Parallel streets may be required by the planning and zoning commission in connection therewith.

(Ord. No. 201203-2o, 3-20-2012)

Section 133. Right-of-way width requirements.

The minimum street right-of-way widths shall be as follows:

Table 13

Freeways and expressways	150 feet
Arterial streets	100 feet
Collector streets	80 feet
Minor commercial and industrial streets	70 feet
Minor residential streets	80 feet[1]

Note[1]: New minor residential streets may use a 60-foot right-of-way if a ten-foot utility easement is provided on each side of the right-of-way.

(Ord. No. 201203-2o, 3-20-2012)

Section 134. Street design requirements.

134.1. *Street intersections.* Street intersections shall be as nearly at right angles as possible, with no street intersection being at any angle of less than 75 degrees.

134.2. *Right-of-way radius.* The street right-of-way radius at street intersections shall be at least 30 feet. Where the angle of street intersection is less than 90 degrees, the planning and zoning commission may require a longer radius.

134.3. *Additional width on existing streets.* Subdivisions that adjoin existing streets shall dedicate additional right-of-way, if needed, to meet the minimum street width requirements set forth in section 133.

134.31. The entire right-of-way shall be provided where any part of the subdivision is on both sides of the existing streets.

134.32. When the subdivision is located on one side of an existing street, one-half of the required right-of-way, measured from the centerline of the existing roadway, shall be provided.

(Ord. No. 201203-2o, 3-20-2012)

Section 135. Design standards for blocks and lots.

135.1. *Design lengths and widths.* Block lengths and widths shall be determined based on the following requirements:

135.11. Blocks shall not be greater than 1,200 feet nor less than 400 feet in length.

135.12. Blocks shall be wide enough to provide two tiers of lots of minimum depth, except where abutting upon major streets, limited-access highways, railroads, or where other situations make this requirement impracticable, in which case the planning and zoning commission may approve a single tier of lots of minimum depth.

135.2. *Lot sizes.* Lot dimensions shall conform to the requirements set forth in the zoning districts in which the land to be subdivided is located. Residential corner lots shall have adequate width to permit appropriate building setback from, and orientation to, both abutting streets.

135.3. *Building lines.* A building line meeting the front and side yard setback requirements of the zoning district in which the subdivision is located shall be established on all lots.

135.4. *Lots abutting on public streets.* Each lot shall abut upon a dedicated public street, with a minimum road frontage of 60 feet, except as provided in section 142.4.

135.5. *Double frontage lots.* Double frontage lots should be avoided except where essential to provide separations of residential development from traffic arterials or to overcome specific disadvantages of topography and orientation. A planting screen easement of at least ten feet, and across which there shall be no right of access, shall be provided along the line of lots abutting such a traffic artery or other disadvantageous use.

(Ord. No. 201203-2o, 3-20-2012)

Section 136. Provision of public land.

136.1. *Dedication or reservation for public use.* Where features of the comprehensive plan such as school sites, parks, playgrounds, and other public spaces are located in whole or in part in a proposed subdivision, or when these features have not been anticipated by the comprehensive plan, but are considered essential by the planning and zoning commission, such features shall be dedicated or reserved by the subdivider. Provided, however, that no more than ten percent of the total area of the proposed subdivision, exclusive of street rights-of-way, shall be required for dedication or reservation to fulfill the requirements of this section.

136.2. *Land not required or suited for public use.* Whenever a plat proposes the reservation of land for, or the dedication of land to, public use, and the planning and zoning commission finds that such land is not suitable for public use, the planning and zoning commission may

either refuse to approve said plat or it may require the rearrangement of lots to include such land. The planning and zoning commission shall waive the reservation or dedication provisions whenever the public body directly responsible for land acquisition executes a written release, stating that such planned feature is not required or is not to be acquired. In the absence of such a waiver, the planning and zoning commission shall disapprove plats when planned features, as specified by the comprehensive plan or deemed essential by the planning and zoning commission, are not incorporated into the plat.

136.3. *Dedication.* The subdivider may deed restrictively the land to be used for a specified public use to Jones County by submitting, with the final plat and documents, a deed to the property involved, clear of all liens and encumbrances, and transferable to the division of the county government which will have ultimate control over the use of such property, provided that the governing body is not obligated to accept.

136.4. *Reservations.* In the event the subdivider feels that a donation through dedication would work an unusual hardship on him, he may elect to reserve the area in question. Whenever the land so reserved is not purchased, acquired, optioned, or condemned by an appropriate public agency within a three-year period from the date of recording the subdivision, or at the time that at least 50 percent of the available lots are built on and occupied, the subdivider may claim the original reservation and cause it to be subdivided in a manner suitable to the subdivider, subject to the provisions of this resolution.
(Ord. No. 201203-2o, 3-20-2012)

ARTICLE XIV. REQUIRED SUBDIVISION IMPROVEMENTS

Section 141. Monuments.

The subdivider shall place permanent reference monuments in accordance with the following provisions:

141.1. *Right-of-way monuments.* Iron pins shall be embedded at least two feet into the ground on street right-of-way lines at street intersections and at each point where the right-of-way line changes direction. Such iron pins shall be at least five-eighths of one inch in diameter. They shall be spaced so as to be within sight of each other. The top surface of each marker shall be approximately level with the ground surface.

141.2. *Property line monuments.* Iron pins shall be embedded at least two feet into the ground at each lot corner, at each point where the property line changes direction, and no more than 1,400 feet apart in any straight line. Where property lines follow rivers or streams the meander lines shall be established and monumented not less than 20 feet back from the bank of such river or stream, except that when such corners or points fall within a street, or proposed future street, the monuments shall be placed on the right-of-way line of the street. Such iron pins shall be at least five-eighths of one inch in diameter. The top surface of such iron pins shall be approximately level with the ground surface.

141.3. *Lot lines extending into rivers and streams.* The lines of lots that extend into rivers or streams shall be monumented in the field by iron pins not less than two feet long and five-eighths of one inch in diameter. Such iron pins shall be placed at the point of intersection of the lot line with a meander line established not less than 20 feet back from the bank of the river or stream.

(Ord. No. 201203-2o, 3-20-2012)

Section 142. Special classification of streets for construction.

All streets shall be classified for construction purposes only as follows: Any subdivision of land in Jones County divided into ten-acre lots and having more than three lots, shall have paved streets as set forth in planning and zoning regulations.

142.1. *Class I street.* A Class I street shall be paved, curbed, and guttered in accordance with the specifications required herein, and shall be required in all zoning districts except AG-1, R-MH, R-R, R-1, R-2, R-3 and R-1-R, but may be so located if the subdivider so desires. Right-of-way width requirements shall be in accordance with section 133 herein.

142.2. *Class II street.* A Class II street shall be paved in accordance with the specifications required herein, but no curbs or gutters shall be required. A Class II street shall be required as a minimum for all streets in R-1, R-2, R-3 and R-1-R districts, and for freeways, expressways, arterial streets, and collector streets in an AG-1 district. Right-of-way width requirements for a Class II street shall be as required in section 133 of this resolution.

142.3. *Class III street.* A Class III street shall be paved in accordance with the specifications required herein. Class III streets shall be required as a minimum in AG-1, AG-R, R-1, R-2, R-3, R-1A, R-1R, R-MH, and R-R districts for all streets except freeways, expressways, arterial streets, and collector streets, which shall be Class II streets as required in section 142.2. Right-of-way width requirements for a Class III street shall be as required in section 133 herein.

142.4. *Private roads.* The purpose of this resolution is to encourage orderly development, to protect against the adverse effects of premature development, and to protect health and safety by encouraging a practical response time for police protection and rescue service.

142.41. *Number of lots permitted.* A maximum of five lots shall be served by a private road including lots having frontage on public roads. A maximum of three lots will be permitted without frontage on a public road. Flag lots will not be permitted. Driveways for each lot served by the private road shall be physically located on the private road and will be constructed prior to final plat approval. Any further subdividing shall require a variance pursuant to section 116, provided that the variance will be submitted to the Jones County Board of Commissioners. A

private road that is built to all applicable standards for a new county road may be served by any number of lots approved by the Jones County Planning and Zoning Commission.

142.42. *Cost responsibility.* No private roads that have not been deeded or dedicated to the county shall be maintained or built by the county. Maintenance and construction costs of these roads not deeded or dedicated shall be borne solely by the owners affected, with no liability to the county. This statement shall be placed on each plat of record before recording by the Jones County Superior Court Clerk's Office. Deeds to transfer title of property shall expressly state that access to the lot is provided by a road that is not county maintained. A road maintenance agreement shall be required which shall be filed concurrently with the deed.

142.43. *Private road construction.* The right-of-way of all private roads shall not be less than 60 feet and the roads shall be properly designed in accordance with the existing planning and zoning regulations for the construction of minor Class III streets; with the exception of section 132.5 and section 145.6. Construction of private roads shall be completed before final plat approval is rendered by the Jones County Planning and Zoning Commission.

142.44. *Signs.* The subdivider shall incur the cost of installing a street name sign and any regulatory signs. A legal stop sign shall be placed and continually maintained at the intersection of a private road and a public road. The private road will bear a sign indicating that it is a "private" road, which may be incorporated into the street name sign. Costs incurred after the initial installation will be the responsibility of the property owners.

142.45. *Construction drawings.* Construction drawings as required by section 124.7 shall not be required for new private roads that serve up to five lots.

(Ord. No. 201203-2o, 3-20-2012)

Section 143. Additional street design requirements.

143.1. *Grades, horizontal curves, tangents, and sight distances.* The following street design requirements shall be adhered to in addition to other requirements stated herein:

Table 14

	Expressways, Freeways, Arterial Streets	*Collector Streets*	*Other Streets*
Maximum street grades	6%	8%	12%
Minimum radii of centerline curvature	800'	500'	100'
Minimum length of tangent between reverse curves	300'	200'	100'
Minimum stopping sight distance	350'	240'	200'

143.2. *Vertical curves.* All changes in grade shall be connected by vertical curves of minimum length in feet equal to 15 times the algebraic difference in percent of grades for expressways, freeways, arterial and collector streets, and one-half this minimum length for

other streets. Profiles of all streets showing natural and finished grades drawn to a scale of not less than one inch equals 100 feet horizontally, and one inch equals 20 feet vertically may be required by the planning and zoning commission.
(Ord. No. 201203-2o, 3-20-2012)

Section 144. Basic construction requirements for all classes of streets.

144.1. *Grading.* All streets, roads, and alleys shall be graded to their full width by the subdivider so that pavements and sidewalks, where required or if installed in the future, can be constructed on the same level plane. The preparation of the right-of-way before grading is started and the construction of cuts and fills shall be accomplished in accordance with the requirements herein and other specifications of the board of commissioners.

144.2. *Storm drainage.* An adequate drainage system based on at least the ten-year rainfall frequency including necessary curb, pipes, culverts, headwalls, and ditches shall be provided for the proper drainage of all surface water. All culverts that are installed shall be either concrete, asphalt-coated, galvanized aluminum, or a DOT approved double wall plastic pipe.

144.3. *Installation of utilities.* After grading is completed and approved and before any base is applied, all of the underground utilities, including water mains, sewer mains, gas mains, and all service connections related thereto, shall be installed completely and approved throughout the length of the street and across the flat section. All driveways for houses to be built by the subdivider shall be cut and drained. Where the utility mains are off the pavement, the subdivider may elect to omit the installation of service connections provided that at such time as these service connections are needed, they may be jacked across the street without breaking or weakening the existing pavement.

144.4. *Slopes and shoulder improvements.* The minimum ratio for all fill or cut slopes shall be two to one and the minimum width for all shoulders from back edge of curb, if installed, shall be eight feet. All shoulders shall slope one-half inch to the foot. When all construction is completed, all slopes and shoulders shall be cleared of all rubbish and will be hydroseeded and mulched with Bermuda seed.

144.5. *Installation of driveways.* The subdivider shall be responsible for the correct installation of driveways and each driveway will conform to the technical standards established by the board of commissioners. It shall be the responsibility of the developer to obtain permits or to see that each landowner obtains permits in accordance with the Jones County Culvert Installation Policy. The driveways must be approved by the Jones County Public Works Director or designated employee. The developer's responsibility for correct installation ends after acceptance of the development roads by Jones County. All driveways except those located on private roads must be installed by the public works department after the required fee has been paid to the county by the builder or property owner. A driveway that crosses an existing sidewalk must be installed in accordance with the typical section shown in section 147.5.

144.6. *Road striping.* All new roads shall be provided with a five-inch wide solid double yellow center line. The lines shall be constructed in accordance with section 652 of the Georgia Department of Transportation Specification.

144.7. *Road permit.* All new roads that will intersect with an existing county road shall obtain a permit from the Jones County Board of Commissioners. This permit shall be obtained prior to issuance of any development permits or approval of a preliminary or final plat.

144.8. *Reserved.*

144.9. *Erosion control.* Before commencement of any land-disturbing activity, a land disturbance permit must be obtained from the planning and zoning office. All erosion and sedimentation control methods shown on the plan approved by the Natural Resources Conservation Service will be installed and inspected by the public works director prior to any land disturbance. All silt fences will be trenched into the ground a minimum of six inches with a mechanical trencher. All requirements of the Jones County Soil Erosion and Sedimentation Control Ordinance and Sections 161, 162, 163 and 171, pages 108—128 of the Georgia Department of Transportation Standard Specifications Construction of Roads and Bridges, 1993 Edition. All required erosion and sedimentation control methods will be maintained until final stabilization is achieved.

144.10. *Clearing and grubbing.* Clearing and grubbing shall begin after all erosion control measures are properly installed. The clearing operation will be checked periodically by the public works director. All clearing has to be completed and approved by the public works director before grading can begin. All clearing and grubbing will be performed in accordance with section 201, pages 129—134 of the Georgia Department of Transportation Standard Specifications Construction of Roads and Bridges, 1993 Edition.

144.11. *Subgrade construction.* Grading construction operations will begin after the clearing and grubbing has been approved by the public works director. The streets will be graded according to the typical section found in section 145.10 of this resolution. The public works director will do periodic checks during the grading operations and call for compaction tests as needed. Ninety-five percent compaction is required with the last six inches being 100 percent compaction. Any unsuitable material is to be removed and replaced. All subgrade construction will be performed in accordance with section 209, pages 156—159 of the Georgia Department of Transportation Standard Specifications Construction of Roads and Bridges, 1993 Edition.

144.12. *Graded aggregate construction.* After the top six inches of subgrade have been completed as per the typical section found in section 145.10, have achieved 100 percent compaction, and have been approved by the public works director, the contractor may begin placing graded aggregate base material. The base shall be six inches thick with 100 percent compaction as shown in the typical section. All graded aggregate base construction will be performed in accordance with section 310, pages 226—230 of the Georgia Department of Transportation Standard Specifications Construction of Roads and Bridges, 1993 Edition.

144.13. *Bituminous prime.* After the graded aggregate base operations are complete with 100 percent compaction that conforms to the typical section and has been approved by the public works director, it shall be primed. After the prime has been applied, a seven-day waiting period is needed for curing. All bituminous prime will be applied in accordance with section 412, pages 283—285 of the Georgia Department of Transportation Standard Specifications Construction of Roads and Bridges, 1993 Edition.

144.14. *Hot mix recycled asphaltic concrete.* After the curing period is complete on the bituminous prime, the contractor can begin placing the two inches of recycled asphaltic concrete "B" binder. Once the binder material has been placed, the contractor will place the one and five-tenths inches of recycled asphaltic concrete "E" mix. Both layers of the recycled asphaltic concrete are to have a compaction of 96 percent of the theoretical density. All recycled asphaltic concrete will be applied in accordance with Sections 402 and 828, pages 270—273, 919—924 of the Georgia Department of Transportation Standard Specifications Construction of Roads and Bridges, 1993 Edition.
(Ord. No. 201203-2o, 3-20-2012; Min. of 1-7-2014)

Section 145. Roadway surfacing and paving.

The following minimum requirements shall be adhered to for the surfacing and paving of streets and roads:

145.1. *Pavement base.* The pavement bases of Class I, Class II, and Class III streets shall conform to the requirements in section 144.12.

145.2. *Thickness of pavement.* The pavement of Class I, Class II, and Class III streets shall conform to the requirements in section 144.14.

145.3. *Minimum pavement width.* All Class I and Class II minor residential streets shall have a minimum pavement width of 27 feet from back of curb to back of curb, or 20 feet from edge of pavement to edge of pavement if no curb and gutters are installed. All other street width pavements shall be determined by the commission and the board of commissioners as required.

145.4. *Pavement breaks for utility connections.* When it is necessary for a subdivider or any utility company to break existing pavement for the installation of utilities, for drainage facilities, or for any other purpose, the subdivider, or utility company, shall be financially responsible for the repair of the pavement. The pavement shall be repaired in accordance with the specifications required herein for construction of streets.

145.5. *Curbs and gutters.* Either the regular six-inch or four-inch rollover concrete curbs and gutters with a minimum overall width of 24 inches shall be constructed on all Class I streets. Cement concrete valley gutters shall be permitted across minor residential streets at street intersections only when no storm sewers are available as determined by the zoning enforcement officer. Valley gutters shall be at least six feet in width. Whenever driveway openings are provided for lots abutting the street, the driveway shall be six inches thick and a minimum of ten feet in width at the sidewalk

or at the street right-of-way line. The driveway shall have a three-foot radius at the curb line. Where ditches are used for drainage, culverts and driveways providing access to each lot shall be installed. Culverts thus installed shall be sufficient for adequate drainage and shall be installed so as to be resistant to damage from future construction or maintenance activities. When a road with curb and gutter intersects with an existing road without curb and gutter, valley curb will be required within ten feet of the intersection. No other type of curbing will be permitted in this area.

145.6. *Class III streets.* Minimum width of a Class III street shall be 20 feet, with a minimum five-foot shoulder.

145.7. *Reserved.*

145.8. *Reserved.*

145.9. *Reserved.*

145.10. *Centerline profile.* The following is a typical section for a new subdivision street:

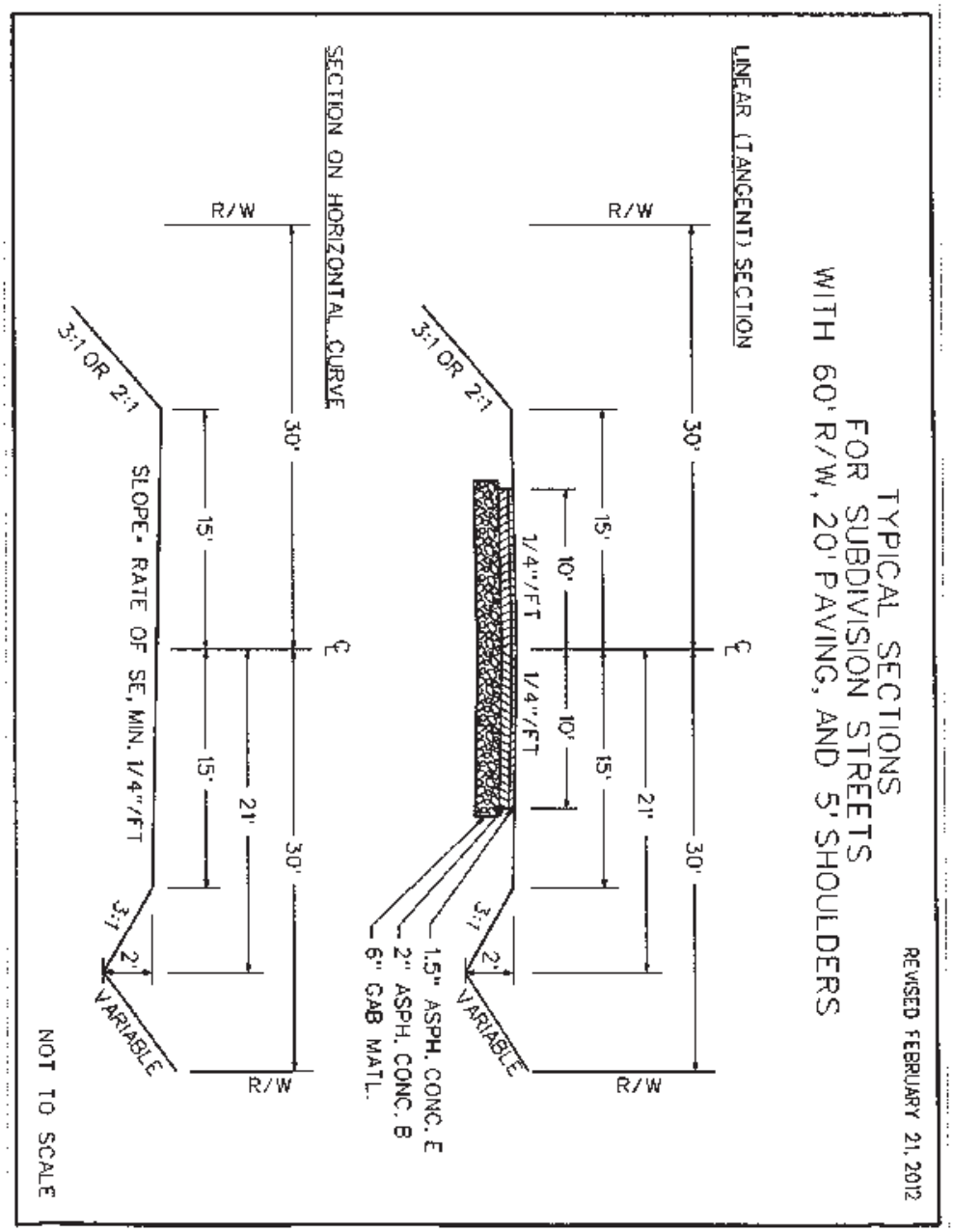

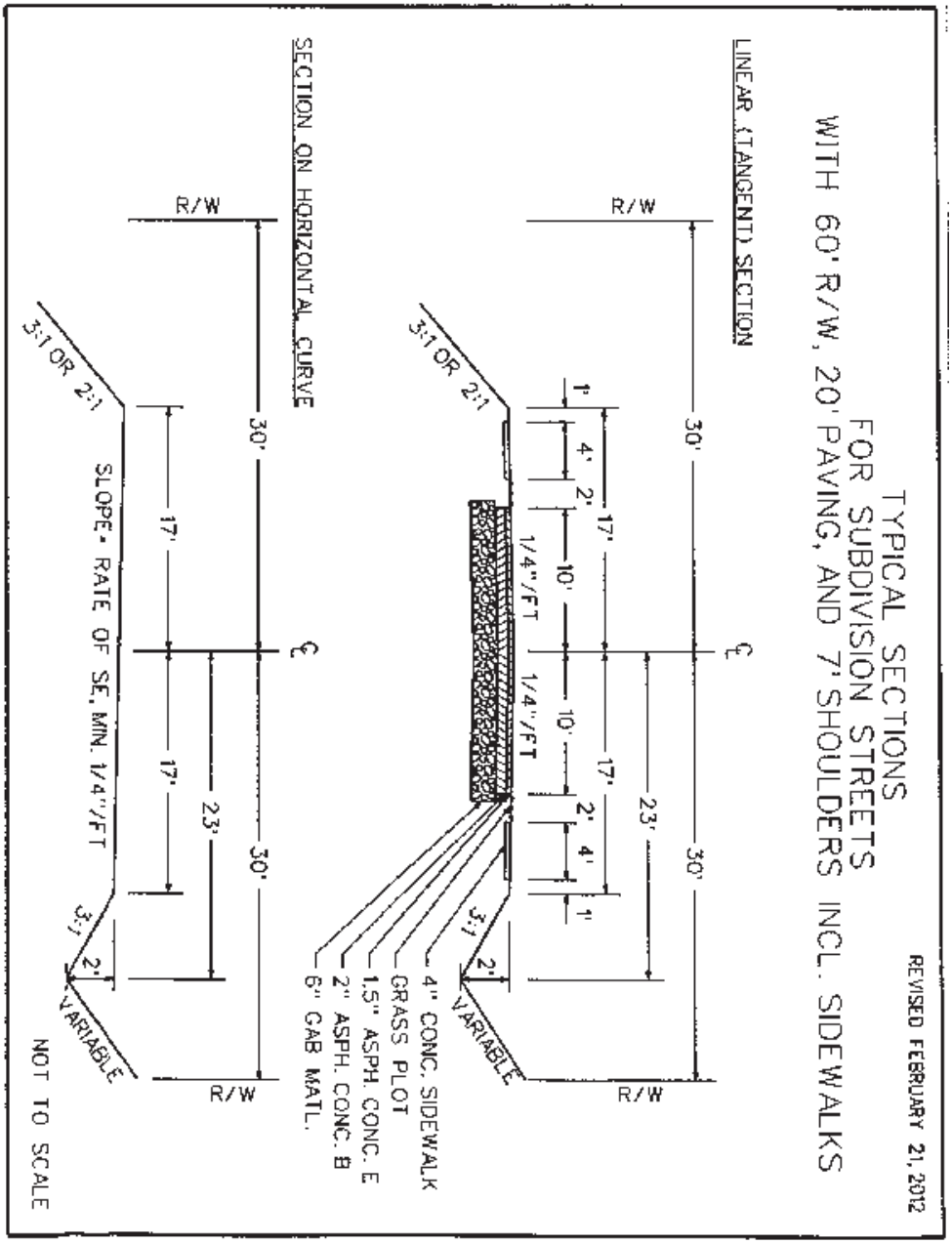

145.11. *Road patching standards.* When making patches to subdivision roads, the following standards will need to be followed:

145.111. An inspector from Jones County will need to be on site the entire time work is being performed on the project. Twenty-four hours' notice shall be required.

145.112. All areas in need of correction will have been outlined with paint by the county inspector. All outlined sections will need to be corrected.

145.113. All patching will be performed in the following manner:

A. Entire outlined section will be excavated to firm material.

B. New sub-base will be installed to 95 percent compaction with the final six inches compacted to 100 percent compaction. All subgrade construction will be performed in accordance with section 209, pages 156—159 of the Georgia Department of Transportation Standard Specifications Construction of Roads and Bridges, 1993 Edition.

C. After the top six inches of subgrade have achieved 100 percent compaction and have been approved by public works, the contractor may begin placing graded aggregate base material. The base shall be six inches thick with 100 percent compaction. All graded aggregate base construction will be performed in accordance with section 310, pages 226—230 of the Georgia Department of Transportation Standard Specifications Construction of Roads and Bridges, 1993 Edition.

D. Once 100 percent compaction has been achieved on the graded aggregate base, the contractor can begin placing the two inches of recycled asphaltic concrete "B" binder. After the binder material has cooled, the contractor will place the one inch of recycled asphaltic concrete "E" mix. Both layers of the recycled asphaltic concrete are to have a compaction of 96 percent of the theoretical density. All recycled asphaltic concrete will be applied in accordance with Sections 402 and 828, pages 270—273, 919—924 of the Georgia Department of Transportation Standard Specifications Construction of Roads and Bridges, 1993 Edition.

145.114. Any intersections with patches in them, or if patches are within 20 feet of the intersection, will need to be overlaid. The entire intersection will need to be overlaid to the back of the radius with 90# overlay.

145.115. Any and all patches are to be overlaid with 90# of asphaltic concrete "G" for the entire width of the road. No skips in overlay are to be less than 100 feet apart.

145.116. If, during the excavation of an area to be patched, it is found to have less than six inches of base, additional asphalt around the patch will be removed until six inches of base is found.

(Ord. No. 201203-2o, 3-20-2012)

Section 146. Installation of utilities.

146.1. *Water.* Water mains for both domestic use and fire protection shall be properly connected with the public water system or with an alternate water supply approved by the Jones County Health Department. The lines shall be constructed in such a manner as to serve adequately all lots shown on the subdivision plat. The lines shall be installed in conformance with the technical standards as established by the board of commissioners.

146.2. *Sewer.* A publicly connected sanitary sewer system shall be installed when the cost of installing such a system does not exceed 150 percent of the cost of installing septic tanks for all lots in the subdivision, and where said system is available from a public agency, subject to regulation by the board of commissioners, or as the result of a contract between that board and another public agency or body. Where lots cannot be economically connected with a sewerage system, they must contain adequate area for the installation of septic tanks and disposal fields approved by the Jones County Health Department. All sewer facilities shall be installed in accordance with the standards of the department of public health of the State of Georgia, and the Jones County Board of Commissioners.

146.3. *Gas.* When gas mains are connected with the gas distribution system of the unincorporated area of Jones County, the lines shall be installed in such a manner as to serve adequately all lots shown on the subdivision plats. The gas lines shall be constructed in conformance with the technical standards established by the board of commissioners.

146.4. *Utility placement schedule.* All utilities installed on the right-of-way of subdivision streets will be installed according to the following:

For streets with curb and gutter:

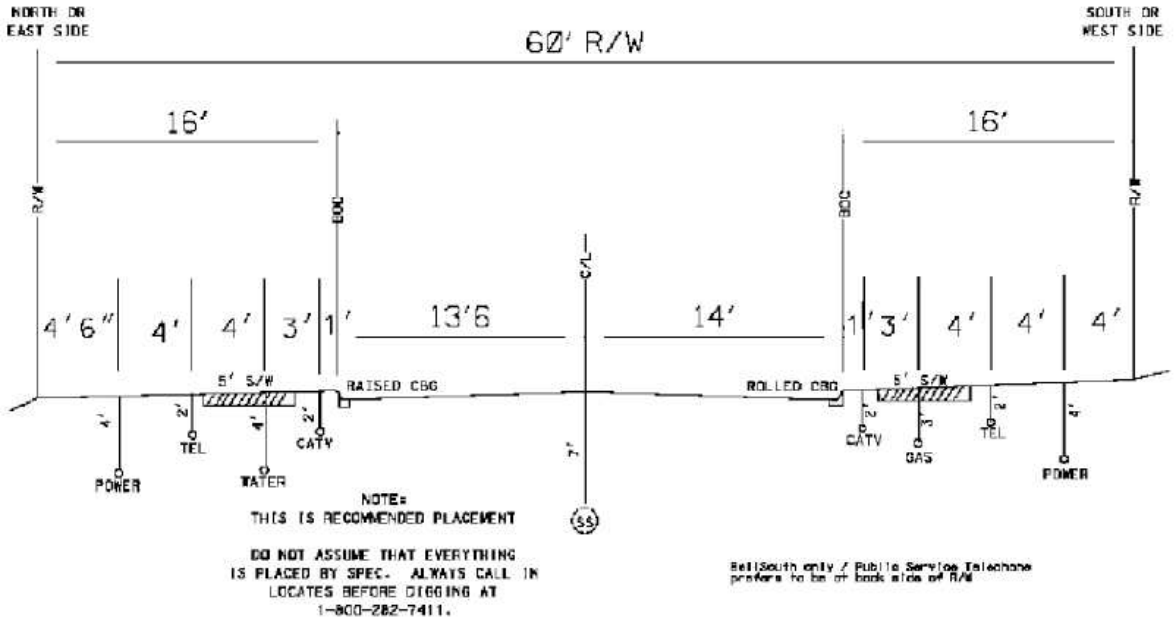

For open ditch:

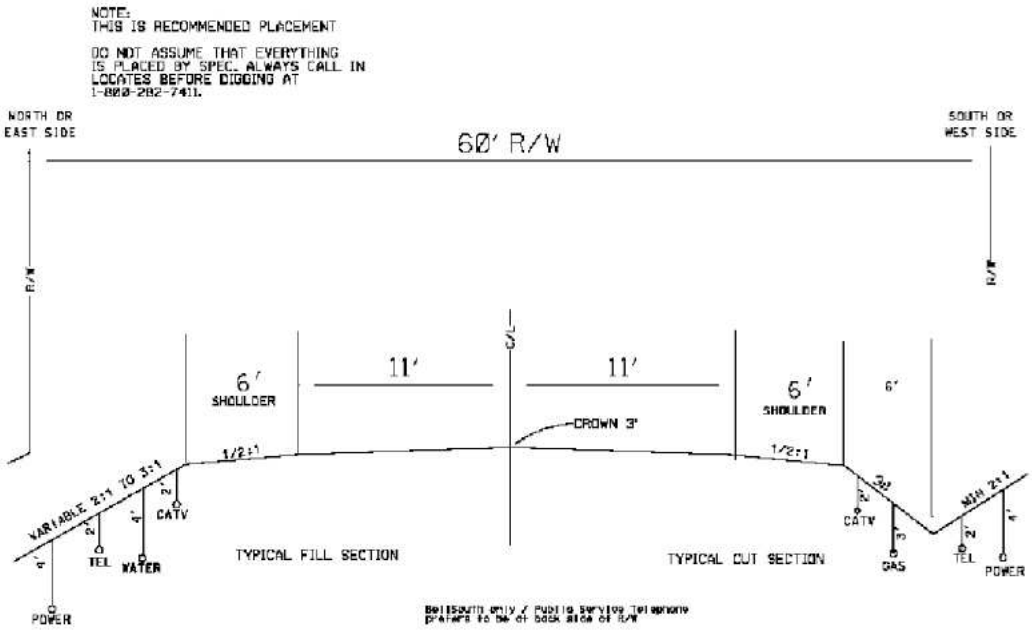

(Ord. No. 201203-2o, 3-20-2012)

Section 147. Sidewalks and street signs.

147.1. *Location of sidewalks.* Sidewalks shall be provided in each subdivision as follows:

R-R residential - Only on one side of street. Not required if average lot size in the subdivision is over two acres.

R-1 residential - Only on one side of street. Not required if average lot size in the subdivision is over two acres.

R-1A residential - Only on one side of street. Not required if average lot size in the subdivision is over two acres.

R-2 residential - Only on one side of street.

R-3 residential - Both sides of street.

R-MH residential - Only on one side of street. Not required if average lot size in the subdivision is over two acres.

R-1-R residential - None.

Other zoning districts: As required by the planning and zoning commission.

147.11. *Exception.* An exception to the requirements of section 147.1 for the R-R, R-MH and R-1 districts shall be granted to additional phases of existing developments. For the purpose of this section an existing development is a development that was under construction as of December 5, 2000.

147.2. *Sidewalk construction.* All sidewalks installed on the county right-of-way shall be a minimum of four feet wide, four inches thick, provided with an expansion joint every 60 feet and a control joint every ten feet and shall be of State Class A concrete based on Table 500.03, page 399 of the Georgia Department of Transportation Standard Specifications Construction of Roads and Bridges, 1993 Edition. Sidewalks shall be placed on 90 percent compacted fill that is free of vegetative material. A minimum of a four-inch chase shall be provided 12 inches under the sidewalk within one to four feet from any property lines. For streets that have a curb, a 30- to 60-inch grass planting strip shall be provided between the back of the curb and the sidewalk, and sidewalks shall slope one-fourth inch to the foot toward the curb. For streets that have an open ditch, a 24- to 60-inch grass planting strip shall be provided between the edge of the road and the sidewalk, and sidewalks shall slope one-fourth inch to the foot away from the road. A slope not exceeding one to eight must be maintained by the sidewalk where it intersects with a driveway. Sidewalks must be completed before the final plat is approved by the county. Unpaved private roads are not required to install sidewalks.

147.3. *Street signs required.* All new or existing roads, public or private, which are included in a subdivision shall be furnished and installed with street name signs as specified in section 147.4. All necessary traffic signs (slow, stop, caution, school bus stop, children at play, 25 mph, etc.) will be furnished and installed at proper locations. Materials for signs will be approved by the board of commissioners, and all expenses incurred will be borne by the developer at no cost to the county.

147.4. *Location of street identification signs.* All streets shall be designated by name on a metal street sign post approved by the board of commissioners, with such metal post having nameplates of metal set one above the other with a clearance of seven feet. The post shall be so located as to be visible for both pedestrian and vehicular traffic. At cross-street intersections, two street sign posts shall be located diagonally across the intersection from each other. Only one street sign post shall be required at T-street intersections.

147.5 *Figure.*

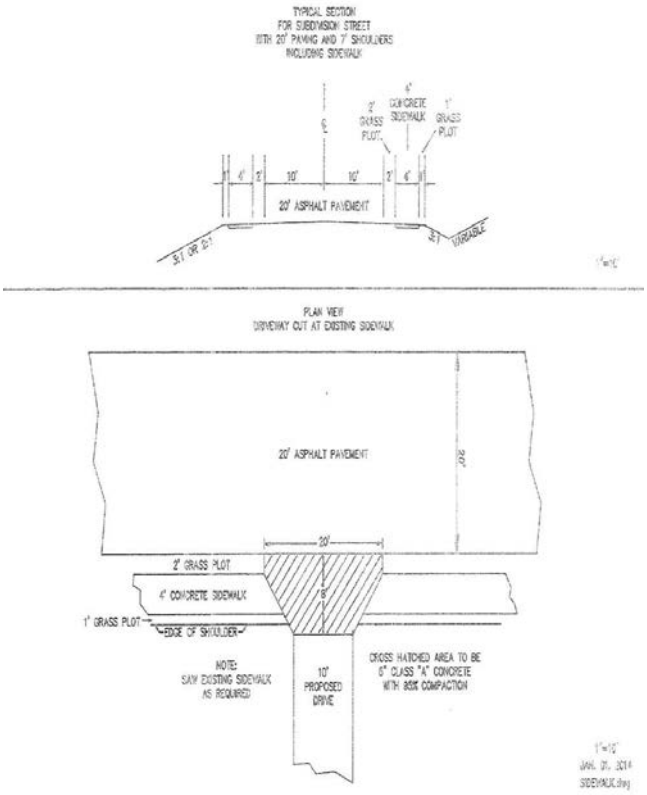

(Ord. No. 201203-2o, 3-20-2012; Ord. of 1-7-2014)

Section 148. Administrative procedures.

The administrative procedures for installing the subdivision improvements required herein shall be as follows:

148.1. *When construction may begin.* Construction and installation of any required public improvements as described herein shall not begin until the planning and zoning commission has given preliminary approval of the new subdivision. The subdivider shall then confer with the zoning enforcement officer to determine the method and estimated cost of the construction and installation of the required improvements.

148.2. *Inspections and approval by the board of commissioners.* During the construction and installation of the required public improvements, the zoning enforcement officer shall from time to time make field inspections of said work as predetermined and agreed upon by the zoning enforcement officer and the subdivider. After completion of all the construction and installation of the required public improvements, and if the said work has met the specifications as described herein as determined by the zoning enforcement officer, the zoning enforcement officer shall notify the subdivider in writing of the approval of said work.

148.3. *Official acceptance by the board of commissioners.* The board of commissioners shall officially accept the completed work on the construction and installation of required public improvements three years from the date of the written acceptance by the zoning enforcement officer.

148.4. *Maintenance of completed work.* The subdivider shall maintain his completed work until the official acceptance by the board of commissioners as described in section 148.3 above. The subdivider shall be required to sign a maintenance bond agreement with the board of commissioners. If a maintenance bond is posted by the subdivider, a bond equaling 50 percent of the construction cost shall be required. The bond presented must be from a bonding company that has current approval from the Georgia Department of Transportation. One hundred eighty days before the expiration of the maintenance period, the zoning enforcement officer shall make final inspection and notify the subdivider of any needed repairs. If repairs have not been completed by 90 days before the expiration of the maintenance period, the zoning director shall cause the needed repairs to be completed. The zoning director shall notify the bonding company of the cost of making necessary corrections, and the cost of maintenance. These costs shall be deducted from the maintenance funds, and the subdivider charged with any costs above the amount of maintenance funds. When the completed work has been accepted by the board of commissioners in accordance with section 148.3, the remainder of the maintenance funds shall be released to the subdivider.

148.5. *Cost of improvements.*

148.51. *Subdividers' responsibility.* The subdivider shall incur the cost of construction and installation of all required public improvements based on the following:

(1) *Streets:* Incur the cost for the construction of streets up to 27 feet in pavement width from back of curb to back of curb, or 24 feet in pavement width from edge of pavement to edge of pavement if no curbs and gutters are installed.

(2) *Water and sewer systems:* Incur the cost for the installation of all water and sewer systems which are required to serve the new subdivision and tie in with existing water and sewer systems, based on the specifications set forth herein.

(3) *Sidewalks:* Entire cost.

(4) *Monuments:* Entire cost.

(5) *Traffic control and street signs:* Entire cost.

148.52. *Board of commissioners' responsibility.* The board of commissioners shall partially participate in sharing the cost of construction and installation of required public improvements for the following conditions:

(1) *Streets:* Incur the cost for any additional required pavement which is in excess of 27 feet for streets with curbs and gutters and in excess of 24 feet for streets without curbs and gutters, and any additional grading and paving relating thereto.

(2) *Water and sewer system:* Incur cost for any difference in the cost of the laying of oversized pipe and outfall systems which are needed in excess of the required water and sewer facilities needed to exclusively serve the new subdivision, as determined by the planning and zoning commission and board of commissioners.

148.53. *Property owner's responsibility.* Whenever the board of commissioners is petitioned in writing by the property owners to upgrade a Class II street to a Class I street, a Class III street to a Class II street, or a Class III street to a Class I street, the property owners shall then incur the entire cost for said improvements based on the footage along the property line of each lot abutting the street which is being improved, and on the requirements in section 148.51 above.

148.54. *Estimated costs for construction and installation.* The current unit prices in effect at the time of submission of plans shall be used in determining the total estimated cost for construction and installation or required public improvements in new subdivisions.

(Ord. No. 201203-2o, 3-20-2012; Min. of 1-7-2014)

Section 149. Testing.

Engineering analysis shall be performed according to the following matrix:

Table 17

Type of Tests to be Performed	*Minimum Number of Tests to be Performed*	*Testing Standard*
Subgrade compaction (density - in place)	One per 500 linear feet of roadway	95% maximum density ASTM - 1557, D-1556, D-2992, and D-2167
Subgrade fill compaction	One per every 2 to 3 feet of vertical fill	
Base compaction (density - in place)	One per 500 linear feet of roadway	100% maximum density ASTM - 1557 modified proctor
Depth check	Same as compaction	
Asphaltic concrete (density - in place)	One per 1,000 linear feet of roadway	92% laboratory density

149.1. *Required notification.* The developer shall notify the director of public works, or other authorized county official, a minimum of 24 hours in advance when the roadway is ready to be tested.

149.2. *Financial responsibility.* The developer will be financially responsible to the testing agency for all required tests.

149.3. *Proofroll.* All base will be load tested with a minimum 18-ton tandem dump, or equal, to cover base thoroughly by lapping the tires on width each pass to assure a minimum tolerance of one-half inch of settling and to ensure no cracking or pumping prior to paving. This is to be witnessed by the director of public works, or designated county representative.

(Ord. No. 201203-2o, 3-20-2012)

ARTICLE XV. PROCEDURES FOR REQUESTING AN AMENDMENT TO THE COMPREHENSIVE LAND DEVELOPMENT RESOLUTION

The board of commissioners may, from time to time, review and, after examination and the holding of a public hearing by the planning and zoning commission, amend, supplement, or change the regulations contained herein. Proposals for amendment, whether initiated by the board of commissioners or a person, firm or corporation, shall not be acted upon until a public hearing has been held pursuant to the following procedures:

Section 151. Initiating the hearing.

A public hearing on a proposed amendment to the text of the Comprehensive Land Development Resolution or the official zoning maps may be initiated by the board of commissioners or by any other party, according to the following provisions:

151.1. *Application by parties other than the board of commissioners.* A party other than a member of the board of commissioners acting in his official capacity may request an amendment to the text of the Comprehensive Land Development Resolution or to the official zoning maps for the unincorporated area of Jones County.

151.11. An amendment to the text of the Comprehensive Land Development Resolution or the official zoning maps may be initiated by any party other than the board of commissioners through written application submitted to the zoning enforcement officer. Any proposed amendment of the official zoning maps must be submitted by the property owner, or a notarized statement signed by the property owner consenting to the requested amendment, must be provided at the time of application submittal.

151.11.1. Application for amendment to the text of the Comprehensive Land Development Resolution shall fully describe the proposed amendment, supplement, or change.

151.11.2. Application for amendment to the official zoning maps shall be made on forms supplied by the zoning enforcement officer, and must be accompanied by a dimensional sketch or to-scale plan of the proposed use included in any application for amendment to the official zoning maps. Such plan shall include, at a minimum, the following:

(1) Lot dimensions with property line monuments located thereon.

(2) The shape, size, height, use, and location of the buildings proposed to be erected, demolished, altered, or moved, and of any buildings already on the lot, yard dimensions, and the use of structures, including the number of dwelling units within each structure, when appropriate.

(3) Public and private easements, watercourses, and fences existing on the lot.

(4) Street names and street right-of-way lines.

(5) Such other information regarding abutting property as directly affects the application, including a list of the names and mailing addresses of all owners of property within 200 feet of the property for which the application is submitted, as shown on the county property tax record or as is known to the applicant.

151.11.3. No application for amendment to the official zoning maps may be considered if, within six months prior to such application, a proposed amendment for the rezoning of the same property proposed for rezoning has been previously considered and rejected by the board of commissioners.

151.12. Upon receipt of an application for amendment to the text of the Comprehensive Land Development Resolution or the official zoning maps, the zoning enforcement officer shall inspect the application for completeness. If the application is found to be complete, the zoning enforcement officer shall notify the chairman of the planning and zoning commission, or the historic preservation commission if an HD historic overlay district is involved, and the board of commissioners of such application. Said application shall be placed upon the agenda of the next regular meeting of the planning and zoning or historic preservation commission for which notification requirements of section 152 can be met for a public hearing. The board of commissioners shall render a final decision upon said application following the public hearing, and within 180 days of receipt of the recommendation of the planning and zoning commission or historic preservation commission relative to the application. If the application is found to be incomplete, the application will be returned to the applicant with a written statement that cites the portion or portions of the resolution with which the application does not comply.

151.13. Any application for amendment to the text of the Comprehensive Land Development Resolution or the official zoning maps may be withdrawn by the applicant upon written notice to the zoning enforcement officer at any time prior to final action thereon by the board of commissioners.

151.2. *Amendments proposed by the board of commissioners.* An amendment to the text of the comprehensive land development resolution or to the official zoning maps that is proposed in the form of a motion by a member of the board of commissioners shall be referred to the planning and zoning commission, or to the historic preservation commission if an HD historic overlay district is involved, for review. A public hearing shall be scheduled by the planning and zoning or historic preservation commission at the next scheduled meeting for which the notification requirements of section 152 can be met. The board of commissioners shall render final decision upon said proposal following the public hearing and within 30 days of receipt of the recommendation of the planning and zoning or historic preservation commission relative to the application.

(Ord. No. 201203-2o, 3-20-2012)

Section 152. Notice of hearings.

The following requirements for notice shall apply to all applications and proposals for amendment to the text of the Comprehensive Land Development Resolution or to the official zoning maps:

152.1. *Amendments proposed by the board of commissioners.* The following requirements for notice shall apply to proposals for amendment to the text of the Comprehensive Land Development Resolution or to the official zoning maps initiated in the form of a motion by a member of the board of commissioners:

152.11. At least 15 but not more than 45 days prior to the date of a hearing held by the planning and zoning or historic preservation commission upon any proposal or application for amendment to the text of the Comprehensive Land Development Resolution or the official zoning maps, the zoning enforcement officer shall cause to be published in a newspaper of general circulation in Jones County a notice stating the time, place, and purpose of said hearing.

152.2. *Amendments proposed by parties other than the board of commissioners.* The following requirements for notice shall apply to applications for amendment to the text of the Comprehensive Land Development Resolution or the official zoning maps initiated by parties other than members of the board of commissioners acting in their official capacity:

152.21. An application for amendment to the text of the Comprehensive Land Development Resolution shall be governed by the notice requirements contained in section 152.11 of this resolution.

152.22. The following requirements for notice shall apply to applications for amendment to the official zoning maps:

152.22.1. The zoning enforcement officer shall cause to be published in a newspaper of general circulation in Jones County public notices, as required by section 152.11 of this resolution, but also including the location of the property, the present zoning classification, and the proposed zoning classification of the property.

152.22.2. The zoning enforcement officer shall attempt to notify by mail each property owner within 200 feet of any property for which an amendment to the official zoning maps is sought. Such notification shall include all elements contained in public notices of hearings held by the planning and zoning or historic preservation commission published pursuant to section 152.22.1 of this resolution. Such notification shall be mailed neither less than 15 nor more than 45 days prior to any hearing held upon said application by the planning and zoning commission. Any errors or omissions that may occur in regard to this section shall not impact the zoning decision.

152.22.3. The zoning enforcement officer shall cause to be posted in a conspicuous location on the property for which an amendment to the official zoning maps is sought one or more signs containing the date, time, and place of the hearing, and address and telephone number of the zoning enforcement officer for further information. Such sign or signs shall be posted not less than 15 days prior to any hearing held upon said application by the planning and zoning commission.

(Ord. No. 201203-2o, 3-20-2012)

Section 153. Conducting the hearing.

The planning and zoning commission and historic preservation commission shall conduct public hearings upon proposals or applications for amendment to the official zoning maps or to the text of the Comprehensive Land Development Resolution. The historic preservation commission shall conduct hearings held relative to the HD historic overlay district, and the planning and zoning commission shall conduct all other hearings upon proposals or applications for amendments to the official zoning maps or the text of the Comprehensive Land Development Resolution.

153.1. *Hearings held by the board of commissioners, planning and zoning commission, or historic preservation commission.* The following procedures shall be adhered to in hearings conducted by the board of commissioners, planning and zoning commission, or historic preservation commission upon any proposal or application for amendment to the official zoning maps or to the text of the Comprehensive Land Development Resolution:

153.11. *Opening the hearing.* The chairman shall open the hearing at the time and place specified in the hearing notice. The chairman shall announce the rules of the hearing before proceeding to address the proposed amendments listed on the agenda.

153.12. *Matter presented.* A description of the proposed zoning decision shall be presented by the director of planning and zoning or his or her designee.

153.13. *Speakers.* Proponents of the proposed zoning decision shall have a minimum of ten minutes to present evidence, information, and/or argument supporting the proposed decision. Opponents of the proposed zoning decision shall likewise have

a minimum of ten minutes to present evidence, information, and/or argument in opposition to the proposed decision. If the proponents or opponents cannot agree on an equitable distribution of the allotted ten minutes, then the chairman or his or her designee will determine how the time will be divided. In any event, every person who wishes to speak, whether in support, opposition, or otherwise, shall have a minimum of one minute to speak. If either the proponents or the opponents of an application collectively take more than ten minutes, then the other's time shall be extended similarly if desired. The county attorney or some other designee of the chairman shall keep time.

153.13.1. *Decorum and order.* Each speaker shall speak only to the merits of the proposed zoning decision and shall address his or her comments to the commissioners. Each speaker shall refrain from making personal attacks or discussing facts or opinions which are irrelevant to the decision under consideration. The chairman may limit or refuse a speaker the right to continue if the speaker, after first being warned, continues to violate this paragraph. Nothing contained herein shall be construed as prohibiting the chairman from conducting the hearing in an orderly and decorous manner to assure that the public hearing on a proposed zoning decision is conducted fairly.

153.14. *Discussion and recommendation.* After all persons have been given an opportunity to speak upon the proposed amendment, the planning and zoning or historic preservation commission shall discuss it and prepare a recommendation upon the proposed amendment for transmittal to the board of commissioners. Such recommendation shall include the commission's findings and conclusions, as well as supporting reasons and facts as necessary.

153.15. *Closing the hearing.* After all of the proposed amendments listed on the agenda have been fully addressed pursuant to the foregoing procedure, the chairman shall declare the hearing to be closed.

153.16. *Assignment of a different zoning district.* With the consent of the applicant, the board of commissioners may assign any zoning district contained in this resolution in response to a request for a map amendment, and shall not be limited to the designation requested by the applicant.

153.17. *Assignment of conditions.* The board of commissioners may grant approval of an amendment to the official zoning maps subject to specific conditions. Where specific conditions are imposed, they will be reduced to writing and provided to the applicant. Any motion or request to remove conditions that have been imposed by the board of commissioners shall be treated as a new application.

(Ord. No. 201203-2o, 3-20-2012)

Section 154. Standards for decision.

In the formulation of any recommendation by the planning and zoning commission or the making of a decision by the board of commissioners upon any application or proposal for

amendment to the official zoning maps, the planning and zoning or historic preservation commission and the board of the commissioners shall balance the interest of the community in promoting the public health, safety, morals, and general welfare against the right of property owners to the unrestricted use of their property. In making these recommendations and decisions, the planning and zoning or historic preservation commission and the board of commissioners shall use the following standards:

154.1. Whether the proposed zoning decision will permit a use of property that is suitable in view of the use and development of adjacent and nearby property;

154.2. Whether the proposed zoning decision will adversely affect the existing use or usability of adjacent or nearby property;

154.3. Whether the property to be affected by the proposed zoning decision has a reasonable economic use as currently zoned;

154.4. Whether the proposed zoning decision will result in a use which will or could cause an excessive or burdensome use of existing streets, transportation facilities, utilities, or schools;

154.5. Whether the proposed zoning decision is in conformity with the policy and intent of the land use plan;

154.6. Whether there are other existing or changing conditions affecting the use and development of the property which give supporting grounds for either approval or disapproval of the proposed zoning decision.

154.7. The following additional standards shall apply to decisions upon applications or proposals for amendment to the official zoning maps involving an HD historic overlay district:

154.71. Whether the area has a special character or special historic or aesthetic value or interest.

154.72. Whether the area represents one or more periods or styles of architecture typical of one or more eras in the history of the county, state, or region.

154.73. Whether the foregoing factors cause such area to constitute a visibly perceptible section of the county.

(Ord. No. 201203-2o, 3-20-2012)

Section 155. Request for rehearing.

Any person, firm, corporation, or organization whose application has been previously and finally disapproved may, within 30 days from the date of final disapproval, move that the board of commissioners authorize a rehearing of and reconsideration of the application. All motions for the rehearing of an application shall be written and submitted to the zoning enforcement officer, and no hearing shall be held upon such motion. No motion for rehearing shall be considered unless new or additional information not available at the time of the original

hearing or not presented due to excusable neglect is available. A denial of such motion is a final action. The granting of such motion shall require a new hearing and a new process of notification as if the application were considered for the first time.
(Ord. No. 201203-2o, 3-20-2012)

Section 156. Printing and distributing this article.

The zoning enforcement officer shall cause to be reproduced and shall keep available copies of this article for distribution to the general public. This article contains provisions required under the Zoning Procedures Law (Georgia Code, Title 36, Chapter 66). Distribution of this article shall conform to the requirements set forth in said law.
(Ord. No. 201203-2o, 3-20-2012)

Section 157. Membership, appointment and term.

The planning and zoning commission shall consist of five members. Each member of the board of commissioners of Jones County, Georgia shall select an individual for appointment to the commission by the board of commissioners for overlapping terms of five years. Effective upon the expiration of the current commission member terms, all members of the planning and zoning commission must live in the same district that they represent. If a member of the commission no longer lives in the district they represent, their position will be considered vacant. The initial appointment of the planning and zoning commission shall be as follows: one member for one year, one member for two years, one member for three years, one member for four years, and one member for five years. Any vacancy in the membership shall be filled for the unexpired term in the same manner as the initial appointment.
(Ord. No. 201203-2o, 3-20-2012)

ARTICLE XVI. ENFORCEMENT AND REMEDIES

Section 161. Violation.

This resolution is adopted pursuant to the 1982 Constitution of the State of Georgia. A violation of any provision of this resolution constitutes an offense punishable in magistrate court, and every day such violation continues shall be deemed as a separate offense.
(Ord. No. 201203-2o, 3-20-2012)

Section 162. Zoning enforcement.

It shall be unlawful to construct, reconstruct or alter any building or other structure without first obtaining a zoning compliance permit or conditional use permit from the zoning enforcement officer, or to use such building or structure or any land without first obtaining a certificate of occupancy from the zoning enforcement officer. The zoning enforcement officer shall not issue any permit unless the requirements of this resolution are complied with.
(Ord. No. 201203-2o, 3-20-2012)

Section 163. Subdivision enforcement.

163.1. The filing or recording of a plat of a subdivision without approval of the planning and zoning commission constitutes a violation of this resolution, and the description by metes and bounds in the instrument of transfer or other document used in the process of selling or transfer shall not exempt the transaction from such penalties. The board of commissioners, through its attorney or other designated official, may enjoin such transfer or sale or agreement by appropriate action.

162.2. No plat or plan of subdivision within the unincorporated area of Jones County shall be filed or recorded by a subdivider in the office of the clerk of the superior court of Jones County until it shall have been submitted to and approved by the planning and zoning commission and such approval entered in writing on the plat by the secretary of the planning and zoning commission. The clerk of the superior court shall not file or record a plat of a subdivision which does not have the approval of the planning and zoning commission.
(Ord. No. 201203-2o, 3-20-2012)

Section 164. Remedies.

In any case any building or structure is or is proposed to be erected, constructed, reconstructed, altered, converted, or maintained, or any building, structure or land is or is proposed to be used in violation of this resolution, the zoning enforcement officer, county attorney, or other appropriated authority of Jones County or any adjacent or neighboring property owner who would be specially damaged by such violation may, in addition to other remedies, institute injunction, mandamus, or other appropriate action or proceeding to prevent such unlawful erection, construction, reconstruction, alteration, conversion, maintenance, or use, or to correct or abate such violation, or to prevent the occupancy of said building, structure, or land.
(Ord. No. 201203-2o, 3-20-2012)

ARTICLE XVII. LEGAL STATUS PROVISIONS

Section 171. Conflict with other laws.

Whenever the requirements of this resolution are at variance with the requirements of any other lawfully adopted statutes, rules, regulations, or ordinances, the most restrictive, or that imposing higher standards, shall govern.
(Ord. No. 201203-2o, 3-20-2012)

Section 172. Validity.

Each phrase, sentence, paragraph, section or other provision of this resolution is severable from all other such phrases, sentences, paragraphs, sections and provisions. Should any

phrase, sentence, paragraph, section or provision of this resolution be declared by the courts to be unconstitutional or invalid, such declaration shall not affect any other portion or provision of this resolution.
(Ord. No. 201203-2o, 3-20-2012)

Section 173. Repealed resolutions and ordinances.

This is a comprehensive enactment of a plan of zoning and regulation of subdivisions, and all prior zoning resolutions are hereby superseded and repealed.
(Ord. No. 201203-2o, 3-20-2012)

Section 174. Effective date.

This resolution shall take effect and be in force from and after the date of its adoption.
(Ord. No. 201203-2o, 3-20-2012)

APPENDIX B

DESIGN GUIDELINES MANUAL—BYPASS DESIGN OVERLAY DISTRICT*

1. Purpose and intent.

The Jones County design guidelines manual is intended to be a helpful design resource representing community expectations for new construction, additions, renovations and rehabilitation of existing buildings along the Jones County Bypass.

The bypass design overlay (BDO) district has been implemented to help create a sense of place for Jones County, preserve the aesthetic environment while enhancing development, and to differentiate Jones County from other communities in the area. Often, conventional development patterns produce linear development, asphalt wastelands, harsh and glaring light levels, and a proliferation of billboards and other distracting signage and visual clutter. Inadequately planned and regulated strip development has also spawned traffic congestion, competing signage and incompatible architecture. As such, these design guidelines have been adopted for the following purposes:

- To help create a sense of place for the county that will enhance the existing architecture in the county and will differentiate the county from other communities in the area.
- To preserve the aesthetic appeal of the county by proactively conserving greenspace and foliage, while sustaining the visual attractiveness of development to match the character of the county.
- To improve gateways and corridors leading into central Jones County and the City of Gray for the purpose of enhancing directional wayfinding.
- To promote the cultural heritage of the county and stimulate the tourism economy.
- To provide for enhanced safety and to ensure the effective movement of people and goods throughout the county.

This manual is both a policy and regulatory document that outlines a vision for the area surrounding the North Gray Bypass through addressing basic aspects of urban design. The use of this manual for future development projects is important to promote a community environment that stimulates new investment and enhances the existing environment.

***Editor's note—**Printed herein is the county's design guidelines manual—bypass design overlay district standards, as revised by the board of commissioners on February 2, 2016. Future amendments will be notated by the use of history notes. Obvious misspellings and punctuation errors have been corrected without notation. For stylistic purposes headings and catchlines have been made uniform and the same system of capitalization, citation to state statues, and expression of numbers in text as appears in the Code of Ordinances has been used. Additions made for clarity are indicated by brackets.

2. Applicability.

The bypass design overlay district was officially established as section 86 in the county zoning ordinance on [January 5, 2016], and the guidelines of this manual shall apply to any development within the bypass design overlay district. The BDO district shall include every parcel located in unincorporated Jones County within 500 feet of the right-of-way of the North Gray Bypass. If any part of the parcel is within the 500-foot buffer, the entire parcel will be considered part of the BDO district, and must conform to these guidelines.

Single-family dwellings are exempt. Agricultural structures, and any accessory buildings of single-family dwellings or agricultural structures shall be exempt from any and all requirements of this section, provided that the aforementioned structure does not lie within 200 feet of the right-of-way of the North Gray Bypass.

The existing zoning map and underlying zoning regulations governing all properties within the bypass design overlay district shall remain in full force and effect. The regulations contained within this appendix shall be overlaid upon, and shall be imposed in addition to said zoning regulations. Except where it is otherwise explicitly provided, whenever the following overlay regulations are in conflict with said existing underlying zoning regulations, the overlay guidelines shall take precedence.

3. Design review process.

Design review is the process by which the design review board approves major changes and/or new constructions that are planned for properties located within the bypass design overlay district and issues a certificate of design review which allows the proposed changes to take place. The guidelines in this manual apply to new construction, additions, renovations and rehabilitations to existing buildings within both districts. The design review process is often triggered by a building permit application; however, building permits cannot be issued until design review is complete. Although some types of work projects, such as installation of a walkway or a fence, may not require a building permit, design review is still required. Property owners, as well as the design review board, shall follow the consistent design review procedures described in section 86 of the county zoning ordinance, and detailed below.

There is a four-step process, outlined below, that property owners must follow before undertaking any improvements which may require the procurement of a certificate of design review from the county.

STEP 1: Determine need for certificate of design review.

There are certain types of routine maintenance activities that property owners can carry out without obtaining a certificate of design review. These activities are fairly narrow in scope, however, depending on the extent of the maintenance effort, they could require a design review. A certificate of design review is required before a building permit can be issued for any material change in appearance to property within the BDO district. A

"material change in appearance" shall be defined as the construction of a new structure, or a change that will affect the exterior architectural features of any structure, site, or work-of-art within a designated overlay district.

Property owners should call the county zoning enforcement officer prior to initiating any routine maintenance on their property in order to obtain verbal administrative approval. A simple phone call can save a property owner both time and money during maintenance projects.

The following lists include examples of activities and whether or not they require design review. This list is not meant to be exhaustive, and the final determination of if a project meets the standard of a material change in appearance lies with the zoning enforcement officer:

Activities that do not require review:

- Painting of original wood siding, except in the case of a radical change of color. Note: Routine maintenance does not include the painting of historically unpainted masonry.
- Demolition or removal of a non-historic or non-original addition to a building, as long as the historic portion of the building is not adversely affected.
- Demolition or removal of an outbuilding that is non-historic or non-original to the site.
- Small scale projects that involve the repair or replacement of deteriorated architectural features or exterior finishes.
- Repair or replacement of a water-damaged fascia board on a cornice. Note: If all of the fascia boards on a structure other than a single-family dwelling need replacement, a certificate of design review is required.
- Replacement of a broken window pane, as long as the original window frame and mountings are undisturbed.
- Interior modifications or repairs to any building or structure.

Activities that do require review:

- Commencement of excavation for construction purposes.
- Exterior additions visible from public rights-of-way.
- Construction of new buildings.
- New or expanded parking areas.
- New sidewalk construction.
- Changes to windows, doors or existing storefronts.
- Removal or alteration of any architectural features, details, or elements.
- New signs or a change in the location of advertising visible from the public right-of-way.

- New fences and retaining walls.
- Painting unpainted masonry.
- Addition or change of exterior lighting.
- Repair or replacement of materials that are identical to or closely match the original.
- Renovations consisting of removal and replacement or the covering of existing materials with new materials.
- Demolition or relocation.
- Roof replacement.
- Work requiring a building permit.

STEP 2: Submission of application for design review certificate.

Applications for design review approval shall be made as required by the zoning enforcement officer and shall, at minimum, contain the following information:

- *Elevation drawings and color, and material samples.* Every application or review involving the construction of a new building or structure and alterations and/or additions to existing structures shall be accompanied by exterior elevation drawings drawn to scale, signed by an architect, engineer or other appropriate professional, and submitted in sufficient number of copies as required by the zoning enforcement officer. Said exterior elevation drawings shall clearly show, in sufficient detail the exterior appearance and architectural design of proposed change(s) to buildings or structures and new construction, as applicable. Each application shall also indicate proposed materials, textures and colors and provide samples of materials and colors.
- *Photographs.* All applications shall be accompanied by photographs of all sides of the existing building(s) or structure(s) affected, and of adjoining properties. Photographs shall be submitted in printed copy and in digital form unless otherwise specified by the zoning enforcement officer.
- *Site plan and landscaping plan.* For every application, a plot plan or site plan drawn to scale shall be submitted which shows all improvements affecting appearances, such as walls, walks, terraces, plantings, tree protection areas, accessory buildings, signs, lights, and other elements.
- *Fee.* A fee, if required by the county commission, shall be submitted for said application.
- *Additional information.* Any additional information, as may reasonably be required by the zoning enforcement officer, shall be submitted with the application.

STEP 3: Design review board application review. When reviewing applications for alteration, new construction, relocation, or demolition, the design review board shall consider the criteria set forth in section 4 of this manual. All certificate of design review applications shall be submitted to the zoning enforcement officer, who shall review the application for

completeness. The application shall be considered at the next design review board meeting, to be held between ten and 60 calendar days from the date upon which the application is certified as complete.

Any applicant shall have the opportunity to request a preliminary review for the purpose of gathering information and informal feedback from the design review board. The board may suggest revisions that enable the preliminary plan to conform to the design guidelines manual, but shall not issue a final ruling granting approval or denial to the applicant. Applicants are not required to have submitted an application for a certificate of design review prior to a preliminary hearing. The design review board reserves the final right to either permit or deny a preliminary hearing. Requests for a preliminary hearing shall be submitted to the zoning enforcement officer at least five calendar days prior to the next design review board meeting.

STEP 4: Action by the design review board.

A decision by the design review board on a design review application shall be made within 90 calendar days from the date a complete application is received. Failure of the design review board to act within this time period shall constitute approval and no other evidence is needed.

Upon completion of the final review, the design review board shall issue a certificate of design review if it finds the proposed change(s) in appearance would not have a substantial adverse effect on the appearance and character of the overlay district. The design review board shall consider the appropriateness of any proposed material change in appearance in the context of the following criteria:

- Consistency with the county design guidelines manual for the type of development and/or its proposed.
- The nature and character of the surrounding areas, and the consistency and compatibility of the proposed application with such nature and character.
- The general design, the character and appropriateness of design, scale of buildings, arrangement, materials, texture and colors (non-painted surfaces), of the structure in question and the relation of such elements to similar features of structures in the immediate surrounding area, site and landscaping.
- Whether the proposed design includes defects such as: character foreign to the area, arresting and spectacular effects, a multiplicity or incongruity of details resulting in a restless and disturbing appearance, and the absence of unity and coherence in composition not in consonance with the density and character of the present structure(s) or surrounding area.
- The interior arrangement or use, provided it has no effect on exterior architectural features, safety, or utility, shall not be considered.

Application approved—Certificate of design review issued.

If an application is approved, the design review board shall issue a certificate of design review to the applicant for the proposed work on the property. The zoning enforcement officer or his/her designee shall ensure the applicant's compliance with the certificate of design review after the work has been completed.

All changes to existing buildings and proposed new construction shall conform to the certificate of design review issued for the project. In the event work is not performed in accordance with such certificate, the zoning enforcement officer shall issue a stop-work order.

An approved certificate of design review shall be valid for 18 months, after which time it shall expire. Upon expiration, a new application must be submitted and a new certificate of design review issued by the design review board prior to commencement of any construction or building modifications.

Application denied—Certificate of design review not issued.

The design review board shall deny a certificate of design review if it finds the material change in appearance would have a substantial adverse effect on the overlay district. If an application is denied, the design review board will notify the applicant, in writing, of its decision and state the reason(s) for the denial. Modifications or alternatives to the proposed project should be included, and applicants are strongly encouraged to discuss such modifications with the design review board. The applicant may resubmit a new or revised application for consideration. The denial of a certificate of design review shall be binding, and no building permit shall be issued, unless the denial of a certificate of design review is reversed on appeal.

Appeals.

Any person adversely affected by any determination made by the design review board relative to the issuance or denial of a certificate of design review may appeal such determination in a manner consistent with section 115 of the Jones County CLDR. Once all appeals have been exhausted, the manner in question shall not return to the design review board without revision.

4. Design standards.

A. *General Guidelines.*

1. Applicability.

Unless indicated or otherwise exempted, the development requirements and guidelines of this manual are intended to apply to all land uses within the bypass design overlay district. However, the cumulative impact of any proposed material change in appearance shall be considered when determining compliance with this manual.

Any structure or property existing in the BDO district at the time of the approval of this section shall not, in their current condition, be affected by any of the standards

or guidelines adopted for this district. Individual improvements to property within the BDO district shall be considered individually for compliance with applicable guidelines. Improvements made to one aspect of a property shall not force the remainder of a preexisting property into compliance with all of the remaining guidelines for the district.

2. Compatibility.

- The site plan, building design, and landscaping of new development shall achieve a high quality appearance that will enhance the surrounding area.
- The scale, mass, volume, and style of any new construction or addition shall be compatible with the human scale of development, and shall blend with the natural landscape to the greatest extent possible.
- Site planning and design of projects proposed adjacent to dissimilar land uses shall carefully address the potential undesirable impacts on existing uses. These impacts include, but are not limited to, traffic, parking, circulation and safety issues, light and glare, noise, odors, dust control and security concerns.

3. Site planning.

- Creative site planning alternatives, such as cluster development, reclamation, mixed-use enterprises, planned centers, and open space zoning, shall be encouraged to offer alternatives to linear strip development.
- Significant cultural, historic, natural, and scenic features shall be identified for preservation during the site planning process.
- Buildings shall be integrated with, not isolated from, their surroundings. All design elements, including without limitation, buildings and appurtenances, landscape design and vegetation, parking, driveways, walkways, signage and lighting, shall be coordinated to create a continuous and harmonious streetscape. Where possible, building appurtenances shall be shared.
- Landscape design shall be an integral component. Retention of existing vegetation is encouraged. Adequate provision for new landscaping areas at the frontage, along the property perimeters, and within pavement areas is essential. Landscape plans shall utilize preferred plant materials, establish planting sizes, and include irrigation and screened utilities.

4. Design for pedestrians.

Development shall, wherever possible, allow for the movement of pedestrians as well as the movement of vehicular traffic. Where pedestrian circulation crosses vehicular routes, a change in grade, materials, textures or colors shall be provided to emphasize the conflict point and improve its visibility and safety. Accent strips of brick or textured paving may also be appropriate for defining pedestrian walkways.

B. *Building siting guidelines.*

The following guidelines shall apply for the purpose of siting buildings, parking, and other structures on property located within the bypass design overlay district. The provisions of this section shall not apply to single-family residential or agricultural land uses.

1. Building setback.

   Commercial and institutional properties in typical downtown areas have more-limited setbacks than other surrounding locations. This style shall be imitated throughout the bypass design overlay district.

   - Buildings shall be constructed in the BDO district to create a plane of building walls in close proximity to the street. As infill development occurs, these buildings shall have a similar setback and shall be close to adjacent structures.
   - Structures within the BDO shall be sited so as to minimize the area between the right-of-way and the structure. These structures shall have a setback between 40 and 80 feet.
   - Buffers between the right-of-way and structure shall contain landscaping and sidewalks, and may contain a driveway, but shall not contain any off-street parking between the structure and right-of-way, unless said parking spaces are not visible from the right-of-way.
   - Large-scale, single-use facilities may be permitted to exceed the 40 to 80 foot setback, provided that they shall be sited behind or above smaller scale uses of pedestrian orientation.

2. Building orientation.

   - The main entrances of all principal structures shall be oriented in a way that provides access both for individuals travelling by foot as well as by automobile. The face of the building with the main entrance shall be considered the primary façade. If, due to site constraints, it is determined that new construction must be oriented so that the primary facade does not face the street, then any secondary façade facing the street must be designed with form, composition, and details consistent with and appropriate to the primary façade.
   - If a new building is to be constructed on a corner lot, the building shall be designed so that architectural emphasis is placed on two elevations; either hierarchically, with emphasis on the facade oriented toward the major street; or equally, with both elevations treated as primary facades.
     - Due to the limited access of the North Gray Bypass, the façade fronting the bypass shall not be utilized as the primary entrance.
   - The design review board shall review any proposed building orientation, and shall evaluate the proposal on the basis of connectivity, and efficiency of both pedestrian and vehicular movement.
     - Secondary entrances may be permitted to achieve this goal with the approval of the design review board.

- Where an access road is in use, the design review board may consider alternative orientation proposals for buildings not visible from the public right-of-way.

3. Height, scale and massing.

As new construction will dominate development in the BDO, the scale of such buildings shall be carefully considered at a human scale, so as to not overshadow the surrounding natural environment.

- One-story buildings are preferred in the BDO area. The scale of the structure shall be proportional to setback.
- The human scale shall be reinforced by including appropriate decorative and functional elements that enhance the character of the district, such as storefronts on traditionally commercial building forms, and porches on traditionally residential building form.
- Massing shall be used that imitates the shape and size of historic buildings within a small downtown setting, such as gray.
- A building's proportions will be compared to other buildings in the vicinity, and with the size of the lot. If a proposed building is over 10,000 square feet, or has a façade greater than 100 feet in length, then setbacks, fenestration, and other techniques shall be used to minimize the visual impact of the building.
    - Where multiple structures are proposed as part of a single development, smaller structures shall have a smaller setback, and be located more prominently to minimize the visual impact of the larger building.

4. Additions to existing buildings.

Location and orientation.

- Location of additions shall not adversely affect the façade of existing buildings, and additions shall be on the rear or side elevations.
- The original orientation of the structure shall be maintained. If the primary entrance is located on the street façade, it shall remain in that location.
- The addition and existing building shall be differentiated by using different wall planes, rooflines or cornice levels.

Size.

- The size of the addition shall be complimentary to the existing structure and shall not visually overpower the existing building.

Roofline and roof pitch.

- Rooflines for additions to the existing buildings shall be compatible in pitch and form with the original roof and the style of the building.

- Rooflines for new additions shall be secondary to those of the existing structure.

Design.

- New additions shall be designed to avoid destruction of historic materials or character-defining features, if present.
- Design of the new addition shall be compatible with and respectful of the existing building. New work shall be differentiated from the old and shall be compatible with its massing, size, scale and architectural features.

5. Accessory buildings.

Garages, storage buildings, and any other accessory structure shall be allowed to the extent permitted by the county zoning ordinances. These structures shall reflect the character of the existing primary structure and adjacent structures, and shall be compatible in terms of scale, height, size, roof shape, materials, and detailing. The scale, height, size, roof shape, materials, detailing and location of such out-buildings shall be sensitive to the character, site and environment of the adjacent structure when the accessory structure is within 200 feet of the public right-of-way.

6. Parking.

In General.

- Off-street parking shall not be required for any nonresidential use, when it has been adequately demonstrated to the board that a sufficient amount of off-street parking is available within 600 feet to serve the proposed use.
- Shared parking areas utilized by more than one building or business are encouraged, to minimize large areas of pavement.
- Properties forming commercial blocks, where the building extends from side-lot-line to side-lot-line, may provide parking in the rear of the buildings, on the corner of such block or "pooled parking" at an adjacent public/private lot. The applicant shall show proposed "pooled" parking areas in their development plans before any such requests shall be approved.
- A large area of asphalt parking without landscaping, adjacent to the roadway, is not permitted. The required alternative is parking on another side of the building with interspersed landscaping amid parking spaces.

Screening of parking areas.

- All parking lots containing five or more spaces that front a public street shall be screened by an evergreen hedge, an earth berm, or brick masonry wall or combination thereof. The hedge, berm, or wall must be no lower than two feet and no higher than four feet in height.
- To preserve a line of sight as vehicular traffic enters and leaves, hedges, berms, and walls shall not be closer than four feet to an entrance or exit.

Off-street parking design.

Off-street parking areas shall be designed to minimize breaks in the pedestrian environment along the public street and create safe and comfortable passage for pedestrians. The following standards shall therefore be met:

- Parking lots shall be placed behind buildings, as viewed from an adjacent street. Parking along the side of the building will only be permitted if the lot is too shallow for parking in the rear. Off-street parking is not permitted in front of the primary building façade, unless such parking is not visible from the public right-of-way along any existing street.
- Parking lots are to be treated as enclosed rooms for cars, with enclosure provided by tree and shrub plantings. Landscaping shall be required around the perimeter.
- Landscaped islands shall be included every ten spaces within the parking lot.
- Parking lots shall be designed to allow pedestrians to safely move from their vehicles to the building. Corridors within the parking area shall channel pedestrians from the car to the perimeter of the lot or to the buildings.
- To maintain pedestrian comfort and calm the speed of entering traffic, driveways to parking areas shall be no wider than 36 feet.

7. Provisions for specific uses.

Drive-through facilities.

- Drive-through facilities shall be located to the rear or side of the building.

Gas station pump islands.

- Gas station pump islands must be located behind the principal building and substantially obstructed from view from the public right-of-way.

C. *Building façade guidelines.*

The following guidelines shall applied for the purpose of guiding the appearance of structures on property located within the bypass design overlay district. The provisions of this section shall apply to all land uses within the BDO, including single-family residential and agricultural land use.

1. Building façades and materials.

Preferred exterior building façade materials in the bypass design overlay district are wood siding and brick masonry. Brick is the most preferred exterior finish material. Materials having a wood siding appearance, such as fiber cement board, are compatible substitutions. Stucco is also acceptable in limited areas (e.g. parapets).

The following exterior finishes are not permitted within the BDO:

- Exposed plywood or OSB.

- Exposed unfinished foundation walls.
- Glass curtain walls.
- Highly reflective, shiny or mirror-like materials.
- Unplastered, exposed concrete masonry unit (CMU's).
- Metal finishes.
- Aluminum and vinyl siding, except on single-family residential, manufactured housing, or agricultural structures, where it may be appropriate to match surrounding architectural styles.

Existing buildings.

- All exterior wood and brick facade materials shall be respected and shall not be changed or concealed by the introduction of a different material.
- When the existing façade materials have been introduced to the building at a later date and are not the original material type, then such materials may be removed so long as the resulting facade material is returned back to the original material type.
- Balconies and porches shall not be added to the fronts of non-residential buildings which never had them.

New construction.

- Façades greater than 100 feet in length must incorporate wall plane projections or recesses thereby creating bays; said bays forming a different plane by at least one foot. No uninterrupted length of façade shall exceed 100 feet.
- Each building shall feature at least one main entrance, which shall be located, with the approval of the design review board, to enhance both pedestrian and vehicular accessibility to the greatest extent possible. Where a main building faces more than two public streets, an entrance for each side may be proposed.
- Any non-residential or non-agricultural façade shall have arcades, display windows, entry areas, awnings, or other similar features along no less than 60 percent of their length.
- Where additional establishments will be located within or adjacent to the principal building, the solid-to-void criteria applies to each individual façade. All windows shall be recessed and shall include visually prominent framing features.
- All storefronts shall include their own door, regardless of the number of storefronts within a single building.
- Do not clad one or more sides in brick and the remaining elevations in clapboard or other siding.

- Where the construction of two-story commercial buildings may be appropriate, the façade shall include the storefront, upper façade and a cornice.

2. Ornamentation.

Existing buildings in the county usually have few decorative architectural details.

- Detailing on new construction shall be restrained, and shall be limited to cornices, decorative masonry, brackets, and similar aesthetic features.
- Limited use of glass block, alternative masonry blocks, stucco, and synthetic stucco may be considered for the creation of building details.

3. Doors and windows.

Avoiding box-like buildings, windows, doors and other features is important to obtain the traditional solid-to-void ratio.

- Where present, historic windows shall be maintained and preserved. Whenever possible, damaged portions of historic windows shall be repaired rather than replaced in total.
- A ratio of solids (walls) to voids (windows and doors), shall be maintained to preserve a diversity of appearance within each individual storefront and to reinforce the human scale of development. Commercial storefronts will often have more horizontal elements and a higher ratio of window-to-wall than the upper stories of the same building.
- Use windows with true divided lights or interior and exterior fixed muntins with internal pacers to reference traditional designs. The profile and dimensions of the muntins shall be proportional to the size and design of the windows.
- Avoid designing false windows in new construction.
- Do not use tinted or mirrored glass on major façades of the building.
- Alternative window materials, including metal, may be determined to be appropriate if they are designed to fit the style of the building.
- Storm doors and storm windows shall be permitted so long as they do not damage or conceal significant features and are visually compatible in size, style, and color with the structure and adjacent structures. Metal storm doors and storm windows shall have a factory painted finish or shall be painted to match the window color. Aluminum or bronze anodized finishes are not permitted.

4. Roofs.

Parapet roof forms are preferred in the bypass design overlay district, as large expanses of flat roofs shall not be visible, and coverage of large expanses of roof with gable or hip forms makes the roof too prominent and out of character with the surrounding environment, both built and natural.

- Any rooftop-mounted equipment shall be incorporated into the overall design of a new building, and shall be screened on all sides in a manner consistent with the design of the rest of the building.

- For existing buildings, any changes in roof shape shall not be visible. All decorative roof features shall be preserved and primary chimneys shall be repaired or rebuilt, not removed,
- Skylights shall not draw attention or detract from roof features, nor shall they interrupt the overall lines of the roof shape. Skylights shall be located on the rear facade away from public view. The number and shape of skylights shall be sensitive to the existing roof. Bubble-type skylights are inappropriate unless concealed.

5. Materials: Buildings and roofs.
   - The use of masonry, such as brick or stone, are the most appropriate exterior finish materials for new buildings.
   - Buildings with metal exterior finishes are not permitted.
   - The use of mirrored glass on the major façades of buildings is not allowed.
   - The use of stucco as an exterior finish material is allowed, but must be limited to 60 percent of the total building facade.
   - Roof materials and colors must be visually compatible and complement the style and period of the structure and shall not detract from the surrounding natural environment. Both metal roofing and asphalt shingles are acceptable. If asphalt shingles are used, they shall be of dark tones.
   - Fascia may be vinyl coated metal.
6. Awnings.
   - The shape, size, and color of awnings shall be compatible with the structure and not conceal or damage any significant architectural details on the structure.
   - An awning must fit the width and shape of any storefront or window opening that it covers. For instance, straight-sloped awnings work best on rectangular storefronts while curved awnings work well on arched openings.
   - Canvas is the traditional material for awnings and is preferred for any new awning installation. Metal, plastic, or shiny, plastic-like fabric awnings shall not be used.
   - The illumination of awnings is prohibited.
   - Awnings shall not continue across two storefronts to join them as one business.
7. Paint and color.
   - Brick, stone, and other naturally unpainted materials shall not be painted.
   - Paint color is not subject to review. However, the design review board is available to give guidance to any resident or business in choosing appropriate paint colors. Appropriate colors are those that are complimentary to the style and overall character of the building, and do not product visual clutter or distraction within the natural landscape.

8. Utilities and mechanical equipment.

- All utilities and mechanical equipment (i.e. satellite dishes, HVAC equipment, and trash receptacles) shall be placed to the rear of the building and screened when in public view.
- Incompatible locations for utilities and mechanical equipment include: the front yard, on the front of a building, or on the side of a yard that is visible from the public right-of-way. Placement of equipment in or on these areas results in a negative visual impact on the BDO.

9. Signs.

Signage shall be compatible with the visual character of the bypass design overlay district. Restraint shall be used in sign design as to limit the clutter, confusion and potential hazard associated with sign competition, while protecting the quality of the landscape. In addition to the regulations set forth in the county zoning ordinances, the following guidelines apply:

Placement.

- No more than two signs shall be placed per commercial property, and all signs shall be placed in traditional locations.
- Signs shall be mounted in such a manner as to minimize the impact on the building's exterior materials. Signs shall not obscure significant architectural features or details of a building,
- Attached signs shall be in scale with and proportional to the host building, and be aligned as much as possible with signs of adjacent properties.
- Freestanding signs shall be oriented perpendicular to traffic flow. Only one sign will be allowed per frontage. Corner lots may choose which traffic flow to address.
- A horizontal sign shall not cover the tops of first-floor windows. Horizontal signs shall not project more than 12 inches from the surface of the building.

Materials.

- Signs shall be brick, wood, metal or a close facsimile, which may be either painted or relief. Box cabinets, whether plastic, vinyl, or lexan are not permissible.

Dimensions.

- Size of signs shall be in proportion to the architecture and scale of the building.
- Ground signs are permitted, provided that the sign area is no larger than six feet in height by 12 feet in width.

Requirements for permitted signage.

- Wall-mounted signs shall be integrated into the architecture of the building along the fascia.
- Awning or canopy signage may be applied directly onto a canopy or awning.
- Hanging signs, which hang perpendicular to the building, are allowed, as long as the sign has a minimum clearance of eight feet above the sidewalk for safety.
- Externally illuminated signs shall be lighted by a white, steady stationary light of reasonable intensity, shielded and directed solely at the sign, to avoid glare or spillage of light into the road right-of-way or up into the sky.
- Neon tubing shall not be physically connected to any exterior sign.
- All lighting elements such as wires, junction boxes, transformers, ballasts, switches and panel boxes shall be concealed from view.
- Display window signs shall not occupy more than 20 percent of the window area.

Non-permitted signage.

- Pole signs are not allowed.
- Internally illuminated, flashing, flickering or moving signs shall not be permitted.
- LED lighting, neon light outlining windows, doors, buildings or other use of neon or LED lights shall not be permitted.
- Roof signs which exceed the height of the ridge are not allowed.

D. *Landscaping guidelines.*

The following guidelines shall be applied for the purpose of guiding landscaping within the bypass design overlay district. The provisions of this section shall apply to all land uses within the BDO, except for agricultural land use.

1. Sidewalks and continuity.

New projects shall interconnect with existing sidewalks, and all new developments within the BDO shall include sidewalks. Where new projects adjoin undeveloped properties abutting public road frontage, the sidewalks installed with the new project shall terminate at the property line at a point where the next project can continue the sidewalk along the public road with little difficulty with slope and grade transitions. All development proposals shall coordinate pedestrian and vehicular circulation patterns with adjacent buildings and sites.

The minimum width for sidewalks within the district shall be five and one-half feet with a five-foot landscaped strip from face of curb (or edge of asphalt, as applicable) to edge of sidewalk.

2. Landscaping.

Landscaping treatments shall be used to enhance the pedestrian experience and aesthetic value of the property, complement architectural features, and/or screen utility and parking areas. Landscape planning shall be integrated with the overall planning concept for any project. The design review board shall evaluate landscape plans as to the relationship to the existing landscape, landscapes on adjacent properties and public rights-of-way, and the existing and proposed building(s).

All landscaping shall conform to the regulations of the county zoning ordinances. The use of plants and planting materials native to Georgia is strongly encouraged. The design review board may waive any requirements if they feel the proposed landscaping will better enhance the proposed project. In doing so, the following principles shall guide the design review board:

a. Complementation of building architecture to provide desirable benefits, such as:
   - Accentuation of major entrances.
   - Definition of spaces and views.
   - Enhancement of property values.
   - Glare reduction.
   - Groundwater recharge.
   - Highlighting of architectural features.
   - Humidification.
   - Noise and dust abatement.
   - Oxygen regeneration.
   - Regulation of pedestrian traffic.
   - Shading.
   - Site beautification.
   - Wildlife habitats, where appropriate.
   - Wind buffering.
   - Visual screening.
   - Visual variety and interest.

b. Size, spacing and scale. Size and spacing of landscape elements shall be consistent with the size of the development, relate to an identifiable streetscape, and be appropriate to the scale and character of any proposed new structures.

c. Hardscape. Landscape shading shall minimize large areas of unshaded pavement. Pavement materials shall be chosen for minimal reflected light and glare. The use of pervious materials is strongly encouraged to reduce surface water flows.

d. Safety. Along streets and highways, plant materials must be selected and placed to avoid blocking sight lines at intersections and curb cuts. Along utility rights-of-way, planting shall not disrupt service or access to equipment or lines.

e. Maintenance. Environmental and maintenance requirements of the plant materials selected. All irrigation systems shall be designed with no over-spray on pedestrian or vehicular travel-ways.

f. Site furniture. Benches, fixed and moveable seating, with and without tables, low walls and fountains are encouraged landscape and street furniture. They add a variety of social opportunities, and provide pedestrians with natural places to pause and rest. Site furniture shall contain no advertising.

3. Outdoor lighting.

Lighting practices shall include indirect lighting, which minimizes light pollution such as glare and light trespass. Carefully designed exterior lighting plans are required to provide the best balance between site safety, security, and appearance considerations. Restrained lighting patterns and fixture selection for commercial development will help prevent commercial lighting from adversely impacting residential properties. Lighting standards are generally applied and recommended by the Illuminating Engineers Society of North America.

- No flickering or flashing lights shall be permitted.
- Light sources shall not be located in buffer areas except on pedestrian walkways. Exterior lighting shall be of low intensity and shielded so that light will not spill out onto surrounding properties or project above the horizontal plane of building walls. All fixtures shall be full cut off.
- Warm lighting colors are encouraged, and lamps emitting a color temperature in excess of 4,000 Kelvin are not allowed.
- A maximum light level of PL-0.2 foot candles measured at ground level is permitted. Light levels for entrances to developments may only exceed PL-0.2 foot candles for traffic safety purposes.
- Lighting fixtures shall be compatible with the architectural character of existing buildings and the proposed development.

4. Fences.

- Security fences shall be located at the rear of buildings or similar low-visibility areas and shall be screened with landscaping.
- Privacy fences shall be constructed of wood, limited in height, meet zoning/building codes and not be installed flush with building facades.
- For residential-style buildings within the BDO, a fence in the front yard must meet all applicable county codes.

- The usage of chain link fence material is discouraged for all properties, and shall only be permitted for use as a security fence in low-visibility areas, where it shall be screened with landscaping.

5. Paving materials.

- All new sidewalks, driveways and parking lots shall be constructed with asphalt or concrete to be compatible in texture, color, style and size with the main structure.

6. Franchise and trademark architecture. Those buildings which have a distinctive exterior appearance and are readily identifiable with a franchise or chain shall be discouraged. If such buildings are used, they shall be modified to relate to both the specific site and to the guidelines of this guide, particularly regarding the building's siting, scale and construction materials.

- To maintain the unique character of the district, buildings shall not be branded using a corporate architectural style.
- Franchise architecture (building design that is trademarked or identified with a particular restaurant/retail store chain or corporation and is generic in nature) is not permitted in the district.
- Artificial themes that are unrelated to the county or that represent other objects are not appropriate. For example, buildings that look like Spanish missions, English Tudor or Polynesian villages, shall be avoided.

E. *Relocation and demolition criteria.*

1. Relocation criteria.

Relocation of structures in the bypass design overlay district shall be defined as moving a structure from one site to another, or moving a structure from outside the district into the district, or moving a structure outside of the district boundaries.

Relocation of a structure from its original site is akin to demolition of the building in its original context. Relocation shall only be considered after it is determined that to remain in its original location would result in the structure's complete demolition. The relocation of a building from the BDO to a site outside the boundaries of the district is considered equal to demolition, because the structure is no longer subject to design review and protection of the design review board.

The relocation of a building from outside the boundaries of the BDO to a site within the district shall be evaluated in accordance with the guidelines set forth in this manual. A structure may be relocated into the district if it possesses similar architectural character in terms of period, style, height, scale, material, and texture, to nearby existing structures. A structure may be moved from one site to another in the district if the following conditions are met:

- The integrity of the location and setting of the building in its original location has been lost or is seriously threatened;

- The new location will be similar in setting and site;
- The structure will be compatible with the buildings adjacent to the new location in style, height, scale, materials and setback; and
- The relocation of the building will not result in a negative visual impact on the site and surrounding structures from which it will be removed.

2. Demolition criteria.

Historic buildings are irreplaceable community assets. As such, the demolition of a building that contributes historically or architecturally to the district shall be avoided.

Demolition of a building will not be allowed if:

- The building is of architectural or historical interest and value or its removal would be detrimental to the character of the district; or
- The building is of old, unusual, or uncommon design and materials, and it could not be reproduced without great difficulty and expense; or
- A proposed replacement would not make a positive visual contribution to the district, would disrupt the character of the district or would be visually incompatible.

Demolition of a building may only be allowed if:

- The building has lost its architectural and historical integrity, and its removal will not result in a negative, less appropriate visual effect on the district; or
- The property owner can prove that the building:
  - Is a threat to the safety of the public, or
  - Cannot be reasonably rehabilitated either structurally or economically.

It is the applicant's responsibility to successfully demonstrate that a building is a candidate for demolition. In order to document the building's structural condition, the design review board may:

a. Require a site visit by design review board members and/or county staff to more closely inspect and evaluate the building.

b. Require the applicant submit an unbiased structural engineering report that documents the building's physical condition.

c. Require the applicant to submit an economic and structural feasibility study for rehabilitating or reusing the structure.

d. Require the applicant to submit a feasibility study for the relocation of the building as an alternative to demolition.

e. Require the testimony of expert witnesses at the public hearing at which the demolition request is being considered.

Prior to the approval of any demolition of a primary building or structure, the applicant is required to provide for the Design Review Board's consideration, prior to approval of the demolition application, plans for the building or buildings that will be located on the site of the demolished building. The new construction project must comply with the guidelines set forth in this manual.

3. Demolition by neglect.

Demolition by neglect refers to the process of deterioration that occurs when routine maintenance or major repair is not performed to the extent that future use or rehabilitation is jeopardized. Demolition by neglect is also a threat to public health and safety, and shall not be an acceptable alternative to a design review board denial of a demolition request. If it is found that demolition by neglect is occurring, the property shall be referred to the code enforcement officer.

GLOSSARY

Addition: A non-original element placed onto an existing building, site or structure.

Alteration: Any act or process which changes the exterior architectural appearance of a building.

Appropriate: Suitable to or compatible with what exists. Proposed work on historic properties is evaluated for appropriateness during the design review process.

Appurtenance: In general, appurtenances include without limitation, appendages to the original structure such as: additions, mechanical systems, covered walkways, satellite dishes and antennae, storage buildings, attached parking decks, etc. In site planning, the term appurtenance may be applied to access roads and parking areas as well.

Buffer: Landscape area which forms a linear stretch abutting a property line, pavement or structures.

Build line: The line indicating structural improvement on the property (building, parking, etc.) closest to the property line. The build line shall be drawn parallel to the front property line.

Certificate of design review: A document required prior to a building permit, approving an application to make an alteration or a material change in the appearance of a property or of a structure, site, or work-of-art located in the bypass design overlay (BDO) district. Possession of a certificate of design review does not remove any responsibility on the part of the property owner to acquire a building permit prior to beginning the project.

Character: The individual qualities of buildings, sites and districts that differentiate and distinguish them from other buildings, sites and districts.

Compatible: Not detracting from surrounding elements, buildings, sites or structures; appropriate given what already exists.

Component: An individual part of a building, site or district.

Contemporary: Of the current period; modern.

Context: The setting in which a historic element or building exists.

Connectivity: Development achieves "connectivity" when one or more land uses and parcels within the development have direct accommodations for both vehicles and/or pedestrians to travel between or among those land uses, and direct vehicular and pedestrian connections with compatible land uses on abutting properties. Direct accommodations for vehicles means that there is one or more alley, road, or driveway connections between the uses on the development site and among compatible uses on abutting sites (parcels), so that a vehicle can exit one development and enter the other development (i.e. cross property lines) without existing onto a public street that provides principal access to the developments. Direct accommodations for pedestrians' means that there are one or more sidewalks

or other approved paths that allow a pedestrian to go from one development or parcel to another without using the sidewalk along a public street that provides principal access to the developments.

Demolition: Any act or process that destroys a structure in part or in whole.

Design review board: Reviews the architectural and site planning considerations and improvements proposed within the bypass design overlay district.

District: The area identified on the Official Zoning Map of Jones County.

Element: An individual defining feature of a building, structure, site or district.

Exterior architectural feature: The architectural style, general design, and general arrangement of the exterior of a structure, including, but not limited to: texture of the building material; type and style of all windows, doors, and signs; and other related architectural fixtures, features, details, or elements.

Fenestration: The spatial definition of the walls of a building. The facade of a building establishes a wall surface or plane. The degree to which that plane is visually segmented by bays and punctured by entrances and windows is fenestration. For example, historic commercial buildings have a high degree of fenestration and large, modern "big-box" sprawl stores have an extremely low degree of fenestration.

Historic site: A site worthy of protection or preservation, designated as historic for its historic, cultural, archaeological, or aesthetic value.

Historic structure: A structure worthy of preservation, designated as historic for its historic, cultural, archaeological, architectural, or aesthetic value.

House type: A definition based on floor plan, height and sometimes roof shape, having nothing to do with architectural style. Most houses that fall into a particular type are of vernacular design, meaning that their designs are based on regional tradition and utilize regional materials.

Infill: New construction within a historic district, generally situated on the site of a demolished structure but possibly on a site never previously developed.

Interior: Landscaping areas within or partially within pavement areas for breaking up large expanses of pavement. Interior landscape areas include islands, peninsulas, or combinations thereof.

Island: An interior landscaping area surrounded by pavement or structures.

Landmark: A building, structure, object or site worthy of preservation, designated as historic for its historic, cultural, archaeological, architectural, or aesthetic value.

Landscape, frontage: Landscape areas between a building and adjacent to street(s).

Landscape, perimeter: Landscape area located between the side and rear of a building and its adjacent property line(s), not adjacent to any street(s).

Maintenance: Routine care for a building, structure or site that does not involve design alterations.

Material change in appearance: The construction of a new structure, or a change that will affect the exterior architectural features of any structure, site, or work of art within the BDO district. Ordinary maintenance or repair of any exterior architectural feature in or on a structure that does not involve a change in design not a "material change in appearance." Material change in appearance includes without limitation any one or more of the following:

- A reconstruction or alteration of the size, shape, or facade of a structure, including without limitation, relocation of any doors or windows, or removal or alteration of any architectural features, details, or elements;
- Demolition of a structure;
- Relocation of a structure within the BDO district or from a location outside the BDO district to a location within the BDO district;
- Commencement of excavation, grading or site improvement;
- A change in the location of advertising visible from the public way on the property; or
- The erection, alteration, restoration, or removal of any structure within the BDO district, including walls, fences, steps, and pavements, or other related features.

Neglect: Failure to care for a property in such a manner as to prevent its deterioration. Neglect is often not intentional, but can lead to very serious deterioration of materials and even structural systems.

New construction: The construction of a new element, building, structure, or landscape component; new construction involves the introduction of designs not original to the building, structure or site.

Ordinary repair and maintenance: Work done to prevent deterioration or to replace parts of a building, structure, sign or exterior architectural feature with equivalent materials in order to correct any deterioration, decay of or damage to any such building, structure, sign or exterior architectural feature. Ordinary maintenance or repair work shall not exceed 25 percent of the structure's assessed value in any 24 consecutive month period.

Ornamentation: Decorative elements applied to a structure.

Orientation: The direction a building's primary elevation (also known as facade) faces.

Pedestrian-friendly: A term which refers to development and features of developments that are designed with an emphasis primarily on the street sidewalk and on pedestrian access to the site and building, rather than an exclusive focus on auto access and parking. Buildings are generally placed close to a street, and the main entrance is oriented to a street or sidewalk. Building facades and other development features along a street are oriented and scaled to the pedestrian.

Preservation: The process of taking steps to sustain the form, details and integrity of a property essentially as it presently exists. Preservation may involve the elimination of deterioration and structural damage, but does not involve reconstruction to any significant degree.

Reconstruction: The process of reproducing the exact form of a component, building, structure or site that existed at some time in the past.

Rehabilitation: The process of returning a building to a state of utility while retaining those elements essential to its architectural, historical and/or aesthetic significance.

Repair: Any minor change to a property that is not construction, removal, demolition or alteration and that does not result in a material change in appearance.

Restoration: The process of returning a building to its appearance at an earlier time (though not necessarily to its original appearance). Restoration involves the removal of later additions and the replacement of missing components and details.

Setting: The immediate physical environment of a building, structure, site or district.

Significant: Possessing importance to a particular building, structure, site or district; essential to maintaining the full integrity of a particular building, structure, site or district.

Site: A place or plot of land where an event occurred or where some object was or is located.

Stabilization: Maintaining a building as it exists today by making it structurally safe.

Streetscape: All physical elements that can be viewed along a street.

Structure: Anything constructed or erected which has, or the use of which requires, permanent or temporary location on or in the ground, or which is attached to something having a permanent location on the ground, including but not limited to, the following: buildings, gazebos, signs, billboards, tennis courts, radio and television antennae and satellite dishes (including supporting towers), swimming pools, light fixtures, walls, fences and steps.

Style: Showing the influence of shapes, materials, detailing or other features associated with a particular architectural style.

Setback: The distance from the property line to the building (including roof overhangs, foundations, porches, etc.). The front setback may encompass landscaped or paved areas, building appurtenances, etc.

Sidewalk clear zone: The portion of a continuous sidewalk located immediately contiguous to the street furniture and tree planting zone reserved for pedestrian circulation and passage and unobstructed by any permanent objects to a height of eight feet. No fixed elements, including traffic control boxes or other utility structures, shall be placed above ground in the clear zone. The clear zone shall have a consistent cross-slope not exceeding two percent.

Street furniture and tree planting zone: The portion of continuous sidewalk located immediately adjacent to the curb reserved for the placement of street trees and street furniture including utility-and-light poles, waste-receptacles, fire hydrants, traffic signs, traffic control boxes, newspaper boxes, transit shelters, bicycle racks, seating and similar elements in a manner that does not obstruct pedestrian access or motorist visibility. Such elements, where installed, shall be a type specified by the zoning enforcement officer in accordance with uniform design standards utilized for the placement of such objects in the public right-of-way.

Street trees: All newly planted street trees shall be a minimum caliper of three inches measured 36 inches above the ground, shall be a minimum of 12 feet in height, shall have a minimum mature height of 40 feet and shall be limbed up to a minimum height of seven feet. Trees shall have a minimum planting area of 40 square feet planted with evergreen ground cover such as, mondo grass or liriope spicata or covered with hardwood mulch. Flowers and seasonal plantings may be planted in tree planting areas but shall be supplemented by hardwood mulch when not planted. Tree grates shall be prohibited.

Street furniture: Those features associated with a street that are intended to enhance the street's physical character and are used by pedestrians, such as benches, bus shelters, trash receptacles, planting containers, pedestrian lighting, kiosks, etc. Advertising on street furniture is not allowed.

Streetscape: The appearance and organization along a street of paving, plantings, street hardware, street furniture and miscellaneous structures.

Through-street: A public or private street within a large-parcel redevelopment that connects a transit corridor to (a) another public or private street within a large parcel development; (b) a public or private street abutting the site; or (c) another property with through-access to another public or private street.

Spacing: The distance between buildings located on adjoining parcels (including both side setbacks).

Vernacular: Based on regional tradition and utilizing regional materials. Also an architectural style exemplifying the commonest building techniques based on the forms and materials of a particular historical period, region, or group of people.

Secretary of the Interior's Standards for Rehabilitation.

1. A property will be used as it was historically, or be given a new use that requires minimal change to its distinctive materials, features, spaces, and spatial relationships.

2. The historic character of a property will be retained and preserved. The removal of distinctive materials or alteration of features, spaces, and spatial relationships that characterize a property will be avoided.

3. Each property will be recognized as a physical record of its time, place, and use. Changes that create a false sense of historical development, such as adding conjectural features or elements from other historic properties, will not be undertaken.

4. Changes to a property that have acquired historic significance in their own right will be retained and preserved.

5. Distinctive materials, features, finishes, and construction techniques or examples of craftsmanship that characterize a property will be preserved.

6. Deteriorated historic features will be repaired rather than replaced. Where the severity of deterioration requires replacement of a distinctive feature, the new feature will match the old in design, color, texture, and where possible, materials. Replacement of missing features will be substantiated by documentary and physical evidence.

7. Chemical or physical treatments, if appropriate, will be undertaken using the gentlest means possible. Treatments that cause damage to historic materials will not be used.

8. Archeological resources will be protected and preserved in place. If such resources must be disturbed, mitigation measures will be undertaken.

9. New additions, exterior alterations, or related new construction will not destroy historic materials, features, and spatial relationships that characterize the property. The new work will be differentiated from the old and will be compatible with the historic materials, features, size, scale and proportion, and massing to protect the integrity of the property and its environment.

10. New additions and adjacent or related new construction will be undertaken in such a manner that, if removed in the future, the essential form and integrity of the historic property and its environment would be unimpaired.

The National Park Service also publishes Preservation Briefs, technical bulletins which provide detailed information for all types of projects and which are written in accordance with the Secretary's Standards. Over 40 subjects are covered in the briefs, which are available online at www.cr.nps.gov/hps/tps/briefs/presbhom.htm.

The Secretary of the Interior's Standards for the Treatment of Historic Properties with Illustrated Guidelines for Preserving, Rehabilitating, Restoring, and Reconstructing Historic Buildings is a government publication and is available from the Government Printing Office (GPO) at www.cr.nps.gov/hps/tps/tpscat.htm or by calling the GPO at 866-512-1800 (toll-free).

Photo Guide of Encouraged Design Standards

Site Planning

Recommended: Larger-scale uses are set further back, with small buildings close to the roads. Combined with landscaping, it creates an enclosed, pedestrian friendly feel.

Not Recommended: Most buildings are further back, and parking spaces are not screened by either trees, landscaping, or other buildings. This increases difficulty of pedestrian access and detracts from the surrounding landscape.

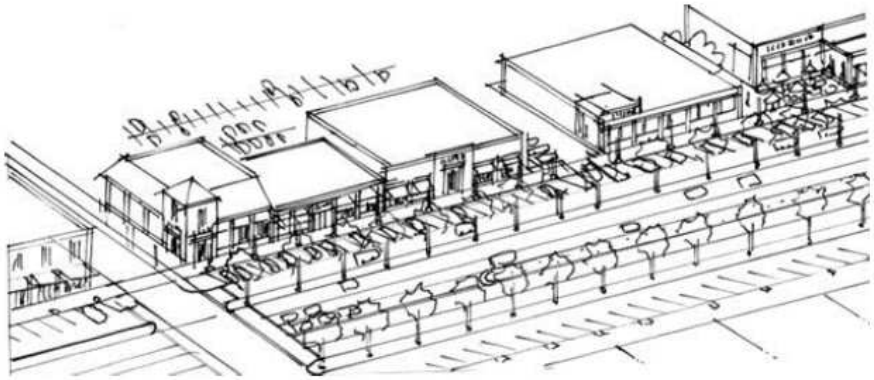

Recommended: Buildings have a limited setback, and majority of parking is found in the rear of the building. This creates a pedestrian-friendly atmosphere and helps calm traffic along side roads.

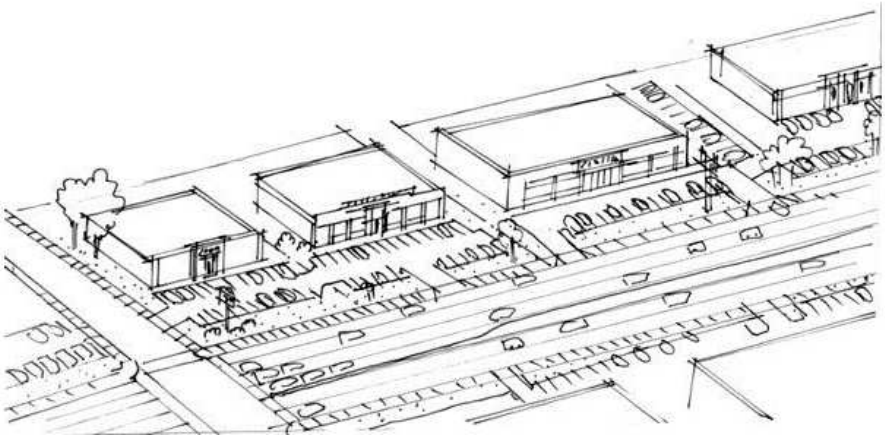

Not Recommended: Again, parking creates a barrier between the main thoroughfare and stores, inhibiting pedestrian movement. Parking spaces are also unscreened, which harms the aesthetic qualities of the area.

Parking & Landscaping

Recommended: Landscaping breaks up the monotony of the asphalt parking spaces and helps to obscure view of vehicles.

Not Recommended: Parking lot is monotonous and unsightly. There is no variety in landscape or scenery, and does not contribute to the environment in any way.

Recommended: Landscaped walkway facilitates the safe and efficient pedestrian movement between cars and stores, while also serving an aesthetic purpose.

Not Recommended: While crosswalks give guidance to pedestrians, they are left vulnerable to automobile traffic, creating a major safety risk.

Façade Design

Recommended: Storefront is broken up by windows, doors, and other architectural features. Brick is the primary façade material, and non-trademark architecture is used.

Not Recommended: Trademark architecture dominates, and a vast wall is present with no features to reinforce the human scale. Stucco is the primary façade material.

Recommended: Storefront has variance and front façade has emphasis on multiple levels. Brick and stone are also incorporated to façade.

Not Recommended: Little variance in front façade, and despite having two stories, there is only one elevation of façade visible in addition to the cornice.

Recommended: Franchise architecture and logos are incorporated unobtrusively, and signage does not distract from building. Fence also increases aesthetic appeal.

Not Recommended: Large pole sign contributes to visual clutter, and franchise architecture makes it indistinguishable from other locations.

CODE COMPARATIVE TABLE

ORDINANCES

This is a chronological listing of the ordinances and resolutions of the county used in this Code. Repealed or superseded laws at the time of the codification, and any omitted materials are not reflected in this table.

Number	Date	Section	Section this Code
	7- 1-1980(Res.)		38-31—38-35
	8-16-1983(Res.)	1	66-91, 66-92
	12-20-1983(Res.)		2-1
			66-61
		2, 3	66-63, 66-64
	12- 3-1985(Ord.)	II(A)	50-31
			50-35
		II(B)	50-36
		II(C)	50-32—50-34
		II(D)	50-37
		II(E)	50-38, 50-39
		II(F), II(G)	50-40, 50-41
		III(A)(1)—III(A)(3)	50-71—50-73
		III(B), III(C)	50-74, 50-75
		III(D)(1)—III(D)(10)	50-76—50-85
		IV(A)—IV(P)	50-111—50-126
		V(A)—V(E)	50-161—50-165
		VI(A), VI(B)	50-4, 50-5
		VII	50-2
		XI	50-1
		XII	50-3
	11-18-1986(Ord.)		22-31—22-33
			22-51—22-56
	12- 5-1986(Res.)	1	66-62
	11- 3-1987(Res.)	1.1	6-1
		2.1	6-2
		2.1—2.5	6-61—6-65
		3.1—3.3	6-66—6-68
		3.4	6-35
		4.1—4.6	6-69—6-74
		4.7, 4.8	6-31, 6-32
		4.9(a), 4.9(b)	6-33, 6-34
		4.10, 4.11	6-36, 6-37
		5.1	6-75
		5.2	6-38
		5.3, 5.4	6-76, 6-77

Number	Date	Section	Section this Code
	6- 7-1988(Res.)		6-34
	1- 3-1989(Ord.)	1	14-1
		2	14-7
		3, 4	14-6
		5, 6	14-8, 14-9
		7	14-12
		8	14-11
		9	14-3
		10	14-2
		11	14-4
		12	14-10
		14	14-5
		15	14-14
	4-20-1989(Ord.)		22-53
	10- 9-1989(Ord.)	I—III	46-31—46-33
		IV	46-32
	1- 8-1991(Ord.)	1, 2	18-112, 18-113
		3—6	18-113—18-116
	7- 2-1991(Res.)		70-1
	3- 3-1992(Ord.)	1	18-31
		3	18-32
		101.2	18-71
		101.3	18-34
		101.4	18-33
		101.5, 101.6	18-37, 18-38
		101.7	18-73
		101.8	18-78
		101.9	18-72
		101.41, 101.42	18-35, 18-36
		102	18-39
		103.1—103.4	18-74—18-77
	8-19-1992(Ord.)	IV—VI	26-74—26-76
	6- 6-1993(Ord.)	1—28	10-31—10-58
	4- 4-1995(Ord.)		18-31
	12-11-1995(Ord.)	A	54-1
	5- 7-1996(Res.)		18-1
	1- 7-1997(Ord.)		22-31
	3- 4-1997(Ord.)	art. 1, § A—art. 1, § D	42-40—42-43
		art. 2, § A—art. 2, § H	42-32—42-39
		art. 3, § A	42-66
		art. 3, § B	42-68
		art. 4, § A(1)—(3)	42-91
		art. 4, § A(4)—art. 4, § A(10)	42-92—42-98

Number	Date	Section	Section this Code
		art. 4, § B(1)—	42-99—42-102
		art. 4, § B(4)	
		art. 4, § C—	42-103—42-105
		art. 4, § E	
		art. 5(a—g)	42-69
		art. 5(h, i)	42-70
		art. 6	42-31
	11- 4-1997(Res.)		74-131—74-133
	7-21-1998(Ord.)	I(1)—I(7)	58-61—58-67
		II, III	58-68, 58-69
	9-15-1998(Ord.)		58-31—58-35
	11-17-1998(Ord.)		30-31, 30-32
	3- 2-1999(Res.)	1	30-62, 30-63
		2—14	30-64—30-76
	6- 6-2000(Res.)		30-1
	8-15-2000(Res.)		66-31—66-35
	1- 2-2001(Ord.)	III	34-172
		IV(A)—IV(D)	34-231—34-234
		IV(E)	34-209
		V(A)—V(C)	34-201—34-203
		V(D)(1)—V(D)(5)	34-204—34-208
		VI(A)—VI(C)	34-173—34-175
		VI(D), (E)	34-176
		VII(A)—VII(D)	34-177—34-180
		VIII(A), VIII(B)	34-181, 34-182
		IX(C)	34-183
	1- 2-2001(Ord.)	II	34-171
	3- 6-2001(Ord.)	I—XII	62-31—62-42
	7-10-2001(Res.)	13	14-13
	8- 8-2001(Res.)	I	26-31
		II	26-71—26-73
		III—VI	26-77—26-80
	7- 2-2002(Ord.)	1	74-61
		2	74-31
		3, 4	74-62, 74-63
		5	74-32
		5(a)	74-91
		5(b), 5(c)	74-33, 74-34
		6	74-35
		6(a)—6(d)	74-36—74-39
		7(a)	74-40
		7(b)	74-92
		8	74-41
		9	74-64
		9(a)—9(c)	74-65—74-67
		9(d), (e)	74-68
		10, 11	74-42, 74-43

Number	Date	Section		Section this Code
		11(a)		74-44
		12		74-93
		12(a)		74-94
		12(b), (c)		74-95
		12(d)		74-96
	3- 5-2002 (Amend.)			App. A, § 142.41 § 147.1.1
	5- 7-2002 (Amend.)			App. A, § 97
	6- 4-2002 (Amend.)			App. A, § 117.43 App. A, § 147.1.1 App. A, § 151.12
	9- 2-2002 (Amend.)			App. A, § 157
	9-17-2002 (Amend.)			App. A, § 147.2
	12-10-2002 (Amend.)			App. A, § 91.31
	12-10-2002 (Amend.)		Added	App. A, § 106
	1- 7-2003(Ord.)		Added	58-106
	3- 4-2003 (Amend.)		Added	App. A, § 71.3 App. A, § 82
	3- 4-2003 (Amend.)			App. A, § 72.11(2)
	5- 6-2003(Ord.)	I—III		58-61—58-69
	3- 2-2004(Ord.)	1—7	Added	Adopt. Ord. 34-171—34-234
	6-15-2004(Ord.)			
	6-15-2004 (Amend.)		Added	App. A, § 95.2
	8- 3-2004 (Amend.)			App. A, § 81.1 App. A, § 82 App. A, § 84.42 App. A, §§ 94.12, 94.22 App. A, §§ 97.4, 97.6 App. A, § 147.1
			Added	App. A, § 72.7
	1- 7-2003(Ord.)			58-31—58-35
200504-1o	5-17-2005			58-66
	7-19-2005(Ord.)		Added	54-3
200509-1o	9- 6-2005	101—105	Added	18-226—18-230
200603-1o	3- 7-2006	1.1—7.2	Added	18-251—18-343
200603-2o	3- 7-2006	1.1—7.9	Added	74-150—74-154 74-160—74-162

Number	Date	Section		Section this Code
200604-1o	4-18-2006	101—105		18-226—18-230
200609-1o	9-19-2006	1—4	Added	26-1
200609-2o	9-19-2006	1, 2	Added	26-2
200609-3o	9-19-2006	1—11	Added	26-126—26-136
200609-4o	9-19-2006	1—5	Added	26-3
200610-1o	10- 3-2006		Rpld	74-31—74-96
		1.01—1.45	Added	74-31—74-76
200610-2o	10- 3-2006	1—3	Added	70-37
200612-1o	12- 5-2006	1—7	Rpld	18-251—18-343
			Added	18-251—18-343
200702-1o	2- 8-2007	1.01—1.45	Rpld	74-31—74-76
			Added	74-31—74-77
	7-17-2007(Ord.)	1.01—1.45	Dltd	74-31—74-77
			Added	74-31—74-77
200810-1o	10- 7-2008	1—14	Added	52-21—52-34
200902-1o	2- 3-2009		Dltd	58-31—58-35
			Added	58-31—58-37
			Dltd	58-101—58-106
200904-3o	4-21-2009		Dltd	42-31—42-43, 42-66—42-70, 42-91—42-105
			Added	42-31—42-43, 42-66—42-70, 42-91—42-107
200906-1o	6-16-2009	1.01—1.45		74-31—74-77
2009-001	12- 1-2009		Added	54-4
2009-004	1- 5-2010		Added	6-3
	6-29-2009	1.01—1.45		74-31—74-77
2009-05	7- 7-2009			58-63, 58-65, 58-69
2009-06	4- 7-2009			18-226—18-230
2009-07-07	7- 7-2009		Added	22-61—22-77
2009-07	9-15-2009			50-33
	5-25-2010			App. A
2010-001	6- 1-2010		Dltd	14-1—14-14, 34-37
			Added	14-1—14-25
2010-02	8-17-2010			2-36
2010-03	8-17-2010			2-43
2010-04	8-17-2010			2-48
2010-05	8-17-2010			2-46
2010-06	8-17-2010			2-32
2010-07	7-20-2010		Dltd	34-171—34-183, 34-201—34-210, 34-231—34-234
			Added	34-171—34-185, 34-201—34-210, 34-231—34-235
2010-08	8-17-2010		Added	App. A, § 146.4

Number	Date	Section		Section this Code
2010-09	9-21-2010			22-61—22-77
2010-10	9-21-2010		Dltd	74-31—74-77
		1.01—1.46	Added	74-31—74-78
2010-11	12-10-2011	1.01	Added	34-1
		1.02	Added	34-2
2011-03R	2-15-2011	I, II	Added	66-1
2011-05	5-10-2011	1.01—1.46		74-31—74-77
201106-1o	6-21-2011	8-20—8-25	Added	18-376—18-381
201107-1o	7-19-2011	1—4	Added	30-77
2012-001	2-21-2012		Added	App. A, § 118
201202-1o	2-21-2012	1.01—1.46		74-31—74-78
201203-2o	3-20-2012			App. A
	4- 2-2012(Min.)		Dltd	18-151—18-161, 18-181—18-191
2012-001	9-18-2012		Added	6-67(3), (4)
201306-1o	7- 1-2013			74-31—74-77
2013-001	8- 6-2013			22-68
2013-002	8-20-2013			6-36
	1- 7-2014(Min.)			App. A, §§ 124.8, 144.5, 148.4
2014-11-20	11-18-2014		Added	2-142
201411-1o	12- 2-2014		Added	50-127, 50-165
201506-1o	6-16-2016			58-61—58-63
				58-65—58-69
			Rpld	58-64
201601-1o	1- 5-2016		Added	App. A, § 83.3
201601-2o	1- 5-2016		Added	App. A, § 86
201601-2o	2- 2-2016(Min)		Added	App. B
20173-1o	3-21-2017	1		14-1, 14-3, 14-17, 14-20
20174-1o	4-18-2017	1		Ch. 54, App. A
20174-2o	4-18-2017	1		74-40(b)
Ord. of	7- 2-2013		Dltd	App. A, § 71.2(13)
Ord. of	1- 7-2014		Added	App. A, § 147.5
Ord. of	3- 4-2014		Added	App. A, § 93.3
Ord. of	9- 4-2014		Added	App. A, § 71.1(9)
			Added	App. A, § 72.11(9)
			Added	App. A, § 72.21(7)
Ord. of	8- 4-2015		Added	App. A, § 72.11(10)
201711-1o	11-21-2017	1		2-142
201801-1o	1-16-2018			34-171—34-236
Ord. of	6- 5-2018			App. A, § 81.1
Ord. of	9- 4-2018			App. A, § 84.41
				App. A, § 84.42
Ord. of	10- 2-2018			App. A, § 97.4(5)
			Added	App. A, § 97.4(9)

STATE LAW REFERENCE TABLE

This table shows the location within the Special Acts and Code, either in the text or notes following the text, of references to (state law).

O.C.G.A.	Section this Code
1-1-3	1-6
1-1-7	1-5
1-3-1—1-3-3	1-4
1-3-3	34-1
	34-172
1-4-1	1-4
2-10-105	22-66
3-1-1 et seq.	Ch. 6
3-3-20	6-34
3-3-40 et seq.	Ch. 10, Art. II
3-4-49	Ch. 6
3-6-40	Ch. 6
4-8-21(b)	14-1
4-8-21(6)	14-1
4-11-1 et seq.	Ch. 14
4-11-2 et seq.	14-9
4-14-3(c)	14-21
4-14-4	14-21
4-8-20 et seq.	14-24
4-8-21(6)	14-1
4-8-21(b)	14-1
4-8-22(c)	14-24
4-8-25	14-24
4-8-25(b)	14-27
4-8-27	14-27
5-4-1	42-69
8-2-1 et seq.	Ch. 18, Art. IV
	18-31
8-2-3	Ch. 18, Art. IV
8-2-25	Ch. 18, Art. II
	18-31
8-2-25(a)	Ch. 38
8-2-26	Ch. 18, Art. II
8-2-26(d)	18-1
tit. 12, ch. 7	34-171
12-2-8	34-233
	App. A, § 85
12-4-72	34-172
12-5-1 et seq.	Ch. 74
12-5-2	34-233
12-5-5(6)	34-233
12-5-20 et seq.	34-233
12-5-20	34-171
12-5-23(a)(5)	34-202
12-5-30(f)	34-171
	34-232
12-5-170 et seq.	34-233
12-5-280—12-5-293	App. A, § 85
12-5-440 et seq.	34-171
12-5-440—12-5-457	App. A, § 85
12-5-440	34-171
12-7-1 et seq.	Ch. 34, Art. IV
	34-202
	34-233
	34-234
12-7-4	Ch. 34, Art. IV
12-7-6	34-172
12-7-6(b)	34-172
12-7-6(c)	34-232
12-7-7(e)	34-176
12-7-7(f)(1)	34-207
12-7-7.1	34-172
12-7-8(a)	31-171
	34-176
	34-202
12-7-17(9)	34-202
12-7-17(10)	34-202
12-7-19(b)(1), (4)	34-210
12-7-20	34-203
	34-210
12-8-20 et seq.	Ch. 62
	62-32
12-8-22(4.1)	62-31
12-8-22(8)	62-31
12-8-22(12.1)	62-31
12-8-22(18)	62-31
12-8-22(25)	62-31
12-8-22(26)	62-31
12-8-22(32)	62-31
12-8-22(33)	62-31
12-8-22(34)	62-31
12-8-22(39)	62-31
12-8-30	62-39
12-8-31.1	Ch. 62
12-8-62	62-31
tit. 15, ch. 10	SA Art. IV, Div. 4, § 5
15-6-67(d)	App. A

O.C.G.A.	Section this Code
15-10-63	46-32
15-21-73 et seq.	1-19
15-21-93	1-19
15-21-100	1-19
15-21-112	1-19
16-1-1 et seq.	Ch. 54
16-6-17	Ch. 10, Art. II
16-7-42(1)	62-31
16-7-42(2)	62-31
16-7-43(b)	62-37
16-7-51	62-31
16-7-52	62-31
16-7-53	62-39
16-9-30(5)	SA Art. I, § 15(B)
16-9-37	SA Art. I, § 15(B)
17-6-11	1-19
17-6-70 et seq.	1-19
17-10-3	1-19
17-10-3(e)	1-19
tit. 21, chs. 2 or 3, art. 7	SA Art. I, § 4
	SA Art. III, Div. 1, § 2
21-2-2	SA Art. III, Div. 2, § 1
21-2-40	SA Art. III, Div. 2, § 1
22-3-100 et seq.	Ch. 42
25-2-1 et seq.	Ch. 38
25-3-1	Ch. 38, Art. II
25-4-1 et seq.	Ch. 38, Art. II
27-4-255	14-1
tit. 27, ch. 5	14-1
31-1-1 et seq.	Ch. 46
31-3-5.2	34-1
32-4-1 et seq.	Ch. 58
32-6-51	Ch. 62
32-6-151	App. A, § 123
33-3-5(2)—(5)	66-92
33-8-8.2	Ch. 66, Art. IV
	66-92
33-8-8.2(a)	66-91
tit. 36, ch. 66	App. A, § 156
36-1-1 et seq.	Ch. 2, Art. II
36-1-11	Ch. 2, Art. III
36-1-20	1-19
	Ch. 70
36-1-20(a)	Ch. 2, Art. II, Div. 3
	42-40
36-5-22	Ch. 2, Art. III
36-11-1 et seq.	Ch. 2
36-18-1	34-172
36-35-6(5)	Ch. 22
36-35-6(a)(2)	Ch. 54
36-39-7	Ch. 74
36-60-1 et seq.	Ch. 2
36-60-3	Ch. 10, Art. II
36-60-12	Ch. 30
36-66-1 et seq.	App. A
36-66-2	App. A
36-80-1 et seq.	Ch. 2
36-80-24	SA Art. I, § 15(B)
36-81-1 et seq.	Ch. 66
38-3-1 et seq.	Ch. 26
38-3-3(5)	26-1
	26-2
	26-3
	26-127
38-3-70 et seq.	Ch. 26
40-2-30(c)	SA Art. V, Div. 1, § 6
40-6-1—40-6-395	70-1
40-6-14	Ch. 34, Art. II
40-6-370	70-1
40-6-371	Ch. 70
40-6-372	70-1
40-8-71(c)	Ch. 34, Art. II
41-1-1 et seq.	Ch. 34, Art. III
41-1-1	34-81
41-2-5	Ch. 34, Art. III
	34-85
41-3-1	Ch. 10, Art. II
tit. 43	22-67
43-12-1	22-66
44-3-1 et seq.	App. A
45-8-1 et seq.	Ch. 66
45-10-1 et seq.	Ch. 2, Art. III
45-11-1	1-18
45-19-20 et seq.	Ch. 2, Art. III
tit. 46, ch. 3	22-66
46-5-120 et seq.	Ch. 30
46-5-133	30-1
46-7-15	22-66
47-17-60 et seq.	1-19
48-4-75 et seq.	66-1

O.C.G.A.	Section this Code
48-5-40	SA Art. V, Div. 2, Subdiv. II, § 2
48-5-50.1	SA Art. V, Div. 2, subdiv. II, § 4
48-5-180	SA Art. V, Div. 1, § 6
46-5-134.2	30-77
46-5-134.2(a)(4)	30-77
46-5-134.2(j)(1)	30-77
46-5-134.2(j)(5)	30-77
46-5-134(f)	30-77
48-5-355	22-66
48-5-356	22-66
48-6-93	22-66
	Ch. 66, Art. III
	66-61
	66-62
48-6-93(d)	66-64
48-13-1 et seq.	Ch. 22
48-13-7	22-63
48-13-9(c)1—22	22-61
48-17-1 et seq.	Ch. 10
49-5-1	App. A, § 32
50-14-1	Ch. 2, Art. II
50-14-1 et seq.	2-34
50-14-1(d)	Ch. 2, Art. II
50-14-2	2-39
50-14-3	Ch. 2, Art. II
	2-39
50-18-70 et seq.	22-70
50-18-70	SA Art. I, § 15(B)
50-19-7	SA Art. I, § 8
	SA Art. II, § 4
	SA Art. IV, Div. 3, § 4
	SA Art. V, Div. 1, § 5
112-8-22(31)	62-31

SPECIAL ACTS INDEX

Art./Div./Sec.

A

ACTIONS. See: SUITS, ACTIONS AND OTHER PROCEEDINGS

ACTS
Judiciary
Magistrate court
Validity of Act IV-4-6

AFFIRMATION. See: OATH, AFFIRMATION, SWEAR OR SWORN

AGE CONCERNS
Seniors. See that subject

AGENCIES. See: DEPARTMENTS AND OTHER AGENCIES OF COUNTY

AGREEMENTS. See: CONTRACTS AND AGREEMENTS

APPROPRIATIONS. See: FINANCES

ASSESSMENTS
Homestead exemptions
Low income seniors; value of residence ..... V-2-I-1 et seq.
See: TAXATION
Taxation; generally ..... V-1 et seq.
See: TAXATION

AUDITS
Board of commissioners I-12

AUTHORITIES. See: BOARDS AND AUTHORITIES

B

BOARD OF COMMISSIONERS
Audit I-12
Board created I-1
Chairman I-14
Checks to be signed I-17
Clerk, compensation and payment for duties of office I-10
Compensation I-8
County administrator I-11
County attorney I-13
Fiscal affairs and meetings of the board I-9
Lease of property I-15A
Members and districts I-4
Members; qualifications I-3
Notice of disbursements; reports of salaries I-16
Oath I-5
Powers, etc. I-2
Purchases I-15
Purchasing card and credit card for county elected officials I-15B

Art./Div./Sec.

BOARD OF COMMISSIONERS (Cont'd.)
Vacancy in office of vice-chairman I-7
Vice chairman I-6

BOARD OF EDUCATION
Compensation; reimbursement III-1-5
Election III-1-3
Elections; districts III-1-2
Members III-1-1
Vacancy III-1-4

BOARD OF ELECTIONS AND REGISTRATION
Appointment III-2-4
Board of registrars abolished III-2-13
Chairperson III-2-11
Compensation III-2-10
Creation of board III-2-1
Members III-2-2
Municipal contracts III-2-9
Oath III-2-7
Office III-2-3
Offices, supplies, etc. III-2-12
Responsibilities III-2-8
Term III-2-5
Vacancy III-2-6

BOARD OF REGISTRARS
Board of Elections and Registration
Board of Registrars abolished III-2-13

BOARD. See: BOARD OF COMMISSIONERS

BOARDS AND AUTHORITIES
Board of commissioners ..... I-1 et seq.
See: BOARD OF COMMISSIONERS
Board of Education ..... III-1 et seq.
See: BOARD OF EDUCATION
Board of Elections and Registration ..... III-2 et seq.
See: BOARD OF ELECTIONS AND REGISTRATION

BUDGET. See: FINANCES

BUILDINGS AND BUILDING REGULATIONS
Homestead exemptions; generally ..... V-2 et seq.
See: TAXATION

BUSINESSES
Taxation; generally ..... V-1 et seq.
See: TAXATION

C

CHAIRMAN, CHAIRPERSON

Art./Div./Sec.

CHAIRMAN, CHAIRPERSON (Cont'd.)
Board of commissioners
Chairman I-14
Board of Elections and Registration
Chairperson III-2-11
Vice chairman. See that subject

CHIEF DEPUTY. See: DEPUTIES

CITY COURT. See: JUDICIARY

CLERKS
Board of commissioners
Clerk, compensation and payment for duties of office I-10
Sheriff
Power and authority to appoint personnel II-1-4
Superior court clerk ..... IV-3 et seq.
See: JUDICIARY

COMPENSATION, SALARIES, ETC. See: OFFICERS AND EMPLOYEES

CONTRACTS AND AGREEMENTS
Board of Elections and Registration
Municipal contracts III-2-9

COUNTY
Board of commissioners
Powers, etc. I-2
Homestead exemptions
Low income seniors
In lieu of county ad valorem taxation V-2-I-2
Judiciary
Superior court
Costs to be paid into treasury of Jones County IV-2-3
Sheriff
Power and authority to appoint personnel II-1-4

COUNTY ADMINISTRATOR
Board of commissioners I-11

COUNTY ATTORNEY
Board of commissioners I-13

COURTS
Judiciary ..... IV-1-1 et seq.
See: JUDICIARY

D

DEPARTMENTS AND OTHER AGENCIES OF COUNTY
Board of commissioners ..... I-1 et seq.

Art./Div./Sec.

DEPUTIES
Judiciary
Superior court clerk; power to designate and name..... IV-4
Sheriff
Power and authority to appoint personnel II-1-4

DISTRICTS
Board of commissioners
Members and districts I-4
Board of Education
Elections; districts..... III-1-2

E

ELECTIONS
Board of Education
Election III-1-3
Elections; districts..... III-1-2
Board of Elections and Registration..... III-2 et seq.
See: BOARD OF ELECTIONS AND REGISTRATION
Taxation
Tax commissioner; election and term V-1-2

EMPLOYEES. See: OFFICERS AND EMPLOYEES

F

FEES (Generally)
Judiciary
Superior court clerk
Collection of fees, etc..... IV-3-3
Sheriff II-1-3
Taxation
Tax commissioner
Collection of fees, etc..... V-1-6

FINANCES
Board of commissioners
Fiscal affairs and meetings of the board I-9
Notice of disbursements; reports of salaries I-16
Compensation, salaries, etc. See: OFFICERS AND EMPLOYEES
Judiciary
Magistrate court
Costs and expenses IV-4-5
Superior court clerk
Operating expenses..... IV-3-5
Salvage of surplus property I-18
Sheriff
Operating expenses II-1-5
Taxation; generally ..... V-1 et seq.
See: TAXATION

Art./Div./Sec.

FINES, FORFEITURES AND OTHER PENALTIES
Judiciary; generally ..... IV-1-1 et seq.
See: JUDICIARY

FORFEITURES. See: FINES, FORFEITURES AND OTHER PENALTIES

FUNDS (Generally). See: FINANCES

G

GEORGIA, STATE OF. See: STATE

H

HOMESTEAD EXEMPTIONS. See: TAXATION

HOUSING
Homestead exemptions; generally ..... V-2 et seq.
See: TAXATION

I

INDEBTEDNESS (Generally). See: FINANCES

J

JONES, COUNTY OF. See: COUNTY

JUDGES
Judiciary; generally ..... IV-1-1 et seq.
See: JUDICIARY

JUDICIARY
Magistrate court
Annual salary IV-4-4
Chief magistrate IV-4-2
Costs and expenses IV-4-5
Vacancy IV-4-3
Validity of Act IV-4-6
State librarian to furnish reports IV-1-1
Superior court
City court abolished IV-2-1
Costs to be paid into treasury of Jones County IV-2-3
Pending business and records transferred to Jones Superior Court IV-2-2
Superior court clerk
Annual salary IV-3-2
Authority IV-3-4
Collection of fees, etc. IV-3-3
Compensation abolished; annual salary prescribed IV-3-1
Operating expenses IV-3-5

Art./Div./Sec.

L

LAWS
Board of commissioners
Powers, etc. I-2
Judiciary; generally ..... IV-1-1 et seq.
See: JUDICIARY
Sheriff; generally ..... II-1-1 et seq.
See: SHERIFF

LEASES
Board of commissioners
Lease of property I-15A

LIABILITY
Board of commissioners
Powers, etc. I-2

LICENSES AND PERMITS
Taxation; generally ..... V-1 et seq.
See: TAXATION

M

MAGISTRATE COURT. See: JUDICIARY

MEETINGS. See specific subjects as indexed

MONIES (Generally). See: FINANCES

N

NAMES AND NAMING
Judiciary
Superior court clerk; power to designate and name IV-4
Taxation
Tax commissioner
Authority to employ; power to designate and name V-1-7

NOTICES. See specific subjects as indexed

O

OATH, AFFIRMATION, SWEAR OR SWORN
Board of commissioners
Oath I-5
Board of Elections and Registration
Oath III-2-7
Taxation
Tax commissioner; oath V-1-3

OBLIGATIONS (Generally). See: BONDS; See also: FINANCES

Art./Div./Sec.

OFFENSES
Judiciary; generally ..... IV-1-1 et seq.
See: JUDICIARY
Sheriff; generally ..... II-1 et seq.

OFFICERS AND EMPLOYEES
Board of commissioners ..... I-1 et seq.
Board of Education ..... III-1 et seq.
Board of Elections and Registration ..... III-2 et seq.
Compensation, salaries, etc.
Board of commissioners
Clerk, compensation and payment for duties of office ... I-10
Compensation I-8
Notice of disbursements; reports of salaries I-16
Board of Education
Compensation; reimbursement III-1-5
Board of Elections and Registration
Compensation III-2-10
Judiciary
Magistrate court
Annual salary IV-4-4
Superior court clerk
Annual salary IV-3-2
Compensation abolished; annual salary prescribed ... IV-3-1
Sheriff
Annual salary; cost-of-living increase II-1-2
Power and authority to appoint personnel II-1-4
Salary basis II-1-1
Taxation
Tax commissioner
Annual salary V-1-5
Judiciary ..... IV-1-1 et seq.
See: JUDICIARY
Salaries. See herein: Compensation, Salaries, Etc.
Sheriff ..... II-1 et seq.
See: SHERIFF
Taxation
Tax commissioner ..... V-1 et seq.
See: TAXATION

P

PENALTIES. See: FINES, FORFEITURES AND OTHER PENALTIES

PERMITS. See: LICENSES AND PERMITS

PERSONNEL. See: OFFICERS AND EMPLOYEES

POLICE DEPARTMENT
Judiciary; generally ..... IV-1-1 et seq.
See: JUDICIARY

Art./Div./Sec.

POWERS
Board of commissioners
Powers, etc. I-2
Board of Elections and Registration
Board of Registrars abolished III-2-13
Judiciary
Superior court
City court abolished IV-2-1
Superior court clerk; power to designate and name IV-4
Sheriff
Power and authority to appoint personnel II-1-4
Taxation
Tax commissioner
Authority to employ; power to designate and name V-1-7

PROCEEDINGS. See: SUITS, ACTIONS AND OTHER PROCEEDINGS

PROPERTY
Board of commissioners
Lease of property I-15A
Homestead exemptions; generally ..... V-2 et seq.
See: TAXATION
Salvage of surplus property I-18

PURCHASES
Board of commissioners I-15

R

RECORDS AND REPORTS
Board of commissioners
Notice of disbursements; reports of salaries I-16
Judiciary
State librarian to furnish reports IV-1-1
Superior court
Pending business and records transferred to Jones Superior Court IV-2-2

REGISTRATION
Board of Elections and Registration ..... III-2 et seq.
See: BOARD OF ELECTIONS AND REGISTRATION

REPORTS. See: RECORDS AND REPORTS

RESIDENCY
Homestead exemptions
Primarily occupied by owner as a residence in homestead V-2-II et seq.
See: TAXATION

REVENUES (Generally). See: FINANCES

Art./Div./Sec.

S

SALARIES
Compensation, salaries, etc. See: OFFICERS AND EMPLOYEES

SCHOOLS
Board of Education ..... III-1 et seq.
See: BOARD OF EDUCATION

SENIORS
Homestead exemptions
Low income seniors ..... V-2 et seq.
See: TAXATION

SHERIFF
Annual salary; cost-of-living increase II-1-2
Automobiles II-1-6
Fees II-1-3
Operating expenses II-1-5
Power and authority to appoint personnel II-1-4
Salary basis II-1-1

SIGNATURES
Board of commissioners
Checks to be signed I-17

SPECIAL ACTS
Board of commissioners ..... I-1 et seq.
See: BOARD OF COMMISSIONERS
Boards and authorities ..... III-1 et seq.
See: BOARDS AND AUTHORITIES
Homestead exemptions ..... V-2 et seq.
See: TAXATION
Judiciary ..... IV-1 et seq.
See: JUDICIARY
Officers and employees ..... II-1 et seq.
See: OFFICERS AND EMPLOYEES
Taxation ..... V-1 et seq.
See: TAXATION

STATE LIBRARIAN
Judiciary
State librarian to furnish reports IV-1-1

SUITS, ACTIONS AND OTHER PROCEEDINGS
Judiciary; generally ..... IV-1-1 et seq.
See: JUDICIARY

SUPERIOR COURT. See: JUDICIARY

SWEAR OR SWORN. See: OATH, AFFIRMATION, SWEAR OR SWORN

Art./Div./Sec.

T

TAXATION
Homestead exemptions
Low income seniors
Eligibility V-2-I-4
Granting of exemptions V-2-I-1
In lieu of county ad valorem taxation V-2-I-2
Taxes levied V-2-I-3
Value of residence V-2-I-5
Primarily occupied by owner as a residence in homestead
Authorization V-2-II-1
Definition V-2-II-2
Exemption amounts V-2-II-3
Notification of ineligibility V-2-II-4
Tax commissioner
Annual salary V-1-5
Authority to employ V-1-7
Collection of fees, etc. V-1-6
Combining of offices V-1-1
Election and term V-1-2
Oath V-1-3
Operating expenses V-1-8
Taxes due and payable V-1-4

TRAFFIC AND VEHICLES
Sheriff
Automobiles II-1-6
Power and authority to appoint personnel and receive reimbursement for use of personal vehicle II-1-4

TREASURY
Judiciary
Superior court
Costs to be paid into treasury of Jones County IV-2-3

V

VEHICLES. See: TRAFFIC AND VEHICLES

VICE CHAIRMAN
Board of commissioners
Generally I-6
Vacancy in office of vice-chairman I-7

CODE INDEX

Section

A

ABATEMENTS
- Adult entertainment establishments
  - Abatement as sanitary nuisance 10-57
- Nuisances
  - Issuance of summons for abatement 34-84
  - Order for abatement 34-85
- Solid waste
  - Solid waste and scrap tire management
    - Civil remedies and abatement of nuisance 62-39
- Vegetation
  - Abatement by county; notice of abatement 34-114
  - Notice to abate 34-113

ACCESS
- Comprehensive land development (Appendix A). See that subject
- Soil erosion and sedimentation control
  - Refusal or obstruction of access to property by inspectors 34-175

ACTIONS. See: SUITS, ACTIONS AND OTHER PROCEEDINGS

ADMINISTRATION (Chapter 2)
- Board of commissioners ..... 2-31 et seq.
- Officers and employees 2-141
- Purchases 2-142
- Records retention 2-1

ADULT ENTERTAINMENT ESTABLISHMENTS
- Abatement as sanitary nuisance 10-57
- Admission of minors unlawful 10-37
- Adult entertainment establishment employees
  - Approval for employment ..... 10-39(b)
  - Independent contractors ..... 10-39(d)
  - Qualifications ..... 10-39(a)
  - Suspension, revocation of license ..... 10-39(c)
- Applicant to appear 10-42
- Application contents 10-41
- Application for license 10-40
- Application; investigation 10-43
- Certain activities prohibited 10-34
- Change of location or name 10-47
- Cleaning of licensed premises 10-54
- Comprehensive land development (Appendix A). See that subject
- Definitions 10-32
- Erotic dance establishment regulations 10-33
- Hearing officer
  - Action by board of commissioners 10-51
  - Report 10-50

Section

ADULT ENTERTAINMENT ESTABLISHMENTS (Cont'd.)
License
Refusal; appeal 10-45
Renewal 10-46
License fee 10-58
License required 10-35
Licenses and permits
Adult entertainment establishment employees
Suspension, revocation of license ..... 10-39(c)
Application contents 10-41
Application for license 10-40
Application; investigation 10-43
License
Refusal; appeal 10-45
Renewal 10-46
License fee 10-58
License required 10-35
Operation of unlicensed premises unlawful 10-36
Permits. See herein: Licenses and Permits
Persons prohibited as licensees 10-44
Powers of hearing officer 10-48
Purpose 10-31
Rules of evidence inapplicable 10-49
Sales to minors unlawful 10-38
Sealing for unsanitary or unsafe conditions 10-56
Self-inspection of licensed premises 10-55
Unlawful operation declared nuisance 10-53
Violations; penalty 10-52

ADVERTISING
Comprehensive land development
Special provisions
Signs ..... 97.1 et seq.
See: COMPREHENSIVE LAND DEVELOPMENT (Appendix A)
Noise control
Loudspeakers; amplifiers; other devices for production or reproduction of sound for advertising 34-35

AFFIRMATION. See: OATH, AFFIRMATION, SWEAR OR SWORN

AG-1 AGRICULTURAL/RURAL DISTRICT
Comprehensive land development (Appendix A). See that subject

AGE CONCERNS
Minors. See that subject

Section

AGENCIES. See: DEPARTMENTS AND OTHER AGENCIES OF COUNTY

AGENTS
Code
Acts by agent 1-10

AGREEMENTS. See: CONTRACTS AND AGREEMENTS

ALCOHOLIC BEVERAGES
Adult entertainment establishments; generally ..... 10-31 et seq.
See: ADULT ENTERTAINMENT ESTABLISHMENTS
Beer and wine
Compliance with applicable laws 6-38
Hours of operation
Generally 6-35
Sales hours 6-36
Knowledge of article provisions 6-37
License
Application approval 6-68
Application required 6-62
Completion of application 6-63
Display 6-71
Execution of application 6-64
Fees, proration 6-74
Grounds for denial 6-67
Grounds for suspension or revocation 6-75
License year; expiration 6-73
Payment of fees 6-69
Proximity to certain uses 6-66
Required 6-61
Search of premises 6-70
Surrender upon revocation 6-76
Transferability 6-72
Waiting period upon suspension, revocation 6-77
Posting of notice to minors 6-32
Sale prohibited on Christmas Day 6-33
Sale to minors 6-31
Sales on election days 6-34
Definitions 6-1
Open containers 6-3
Use in business promotions prohibited 6-2

ALLEYS
Comprehensive land development
General provisions
Off-street loading and unloading spaces
Connection to street or alley, (App. A § 63.2)
General requirements and minimum standards of design for the subdivision of land
General requirements for streets and other rights-of-way, (App. A § 132.8)

Section

AMENDMENTS
Board of commissioners
Amendments to rules 2-49
Parliamentary procedure
Subsidiary motions; amend ..... 2-77(2)
Code
Amendments to Code 1-16
Comprehensive land development (Appendix A). See that subject
Historic preservation
Designation of historic districts and landmarks
Authority to amend or rescind designation 50-85

AMUSEMENTS AND ENTERTAINMENTS
Adult entertainment establishments ..... 10-31 et seq.
See: ADULT ENTERTAINMENT ESTABLISHMENTS
Alcoholic beverages; generally ..... 6-1 et seq.
See: ALCOHOLIC BEVERAGES
Comprehensive land development
Special provisions; nonstructural uses
Campgrounds, (App. A § 98.3)

AND
Definitions and rules of construction
Or, and 1-4

ANIMALS
Abuse of animals 14-9
Adoption of animals 14-21
Confinement of biting animals 14-19
Control and removal of animal wastes 14-6
Definitions 14-1
Disposition of impounded animals 14-17
Enforcement 14-18
Escape, injury, or theft 14-22
Exemption for hunting dogs 14-25
Fees 14-10
Field euthanasia 14-14
Identification and inoculation 14-7
Impoundment of animals 14-16
Injured impounded animals 14-15
Jones County Animal Control Officers 14-12
Keeping dogs under control 14-2
Livestock running at large 14-5
Obstruction of an officer 14-8
Penalty 14-11
Power to issue citations 14-13
Prohibitions for dogs 14-4
Records 14-23
Redemption of impounded animals 14-20
Regulation of dangerous and potentially dangerous dogs 14-24

Section

ANIMALS (Cont'd.)
Specific requirements for confinement 14-3

AO ZONES
Floods
Flood damage prevention
Flood hazard reduction, provisions for
Standards for areas of shallow flooding (AO zones)... 42-104

APPEALS
Adult entertainment establishments
License; refusal 10-45
Board of commissioners
Parliamentary procedure
Incidental motions..... 2-79(1)
Comprehensive land development (Appendix A). See that subject
Historic preservation
Application for certificates of appropriateness..... 50-126

APPROPRIATIONS. See: FINANCES

ASSESSMENTS
Taxation; generally..... 66-31 et seq.
See: TAXATION

ASSOCIATIONS (Generally). See: BUSINESSES

AUDITS
Emergency services
911 emergency answering service..... 30-75

AUTHORITY (Defined)
Definitions and rules of construction
Delegation of authority..... 1-4
Joint authority 1-4

AUTOMOBILES. See: TRAFFIC AND VEHICLES

B

BEER. See: ALCOHOLIC BEVERAGES

BIRDS (Generally). See: ANIMALS

BITING ANIMALS
Confinement of..... 14-19

BLOCKS
Comprehensive land development
General requirements and minimum standards of design for the subdivision of land
Design standards for blocks and lots, (App. A § 135.1 et seq.)

Section

BOARD OF COMMISSIONERS
Abstentions..... 2-42
Adult entertainment establishments
Hearing officer
Action by board of commissioners 10-51
Agenda..... 2-43
Amendments to rules 2-49
Chairman..... 2-31
Committees 2-33
Comprehensive land development (Appendix A). See that subject
Consent agenda..... 2-44
Decorum..... 2-47
Definitions and rules of construction..... 1-4
Emergency sessions 2-38
Executive sessions..... 2-39
Legislation
Action restricted; emergencies..... 2-106
Adoption of ordinances, resolutions, contracts..... 2-109
Effective date of ordinances..... 2-110
Introduction of ordinances, resolutions and other matters 2-105
Legislative authority generally..... 2-101
Ordinances, resolutions, contracts and interlocal agreements..... 2-102
Preparation of ordinances..... 2-103
Reading of ordinances 2-107
Required elements of ordinances..... 2-104
Subject matter of ordinances 2-108
Minutes..... 2-45
Open meetings..... 2-34
Order of business..... 2-46
Organizational meetings..... 2-35
Parliamentary procedure
Debate..... 2-74
Incidental motions
Appeal ..... 2-79(1)
Parliamentary inquiry ..... 2-79(2)
Point of information (request for information) ..... 2-79(4)
Point of order (question of order)..... 2-79(3)
Main motion 2-73
Parliamentarian..... 2-72
Privileged motions
Adjourn ..... 2-78(3)
Question of privilege ..... 2-78(1)
Recess..... 2-78(2)
Ranking of motions 2-76
Rules of procedure 2-71
Subsidiary motions
Amend ..... 2-77(2)
Lay on the table (postpone temporarily)..... 2-77(7)

Section

BOARD OF COMMISSIONERS (Cont'd.)
Limit debate or extend limits ..... 2-77(5)
Postpone indefinitely ..... 2-77(1)
Postpone to a time certain (postpone definitely) ..... 2-77(4)
Refer to a committee (commit) ..... 2-77(3)
Vote immediately (previous question) ..... 2-77(6)
Supplementary main motions
Reconsider ..... 2-80(1)
Rescind ..... 2-80(2)
Resume consideration ..... 2-80(3)
Voting; procedure
Debatable motions ..... 2-75(1)
Undebatable motions ..... 2-75(2)
Public participation
Decorum ..... 2-48(3)
Public hearings ..... 2-48(4)
Public participation on agenda items ..... 2-48(2)
Visitors ..... 2-48(1)
Quorum 2-40
Regular meetings 2-36
Special meetings and rescheduled regular meetings 2-37
Suspending the rules of order 2-50
Vice-chairman 2-32
Visual and sound recordings 2-51
Voting; majority 2-41

BOARD. See: BOARD OF COMMISSIONERS

BOARDS, COMMITTEES AND COMMISSIONS
Board of commissioners ..... 2-31 et seq.
See: BOARD OF COMMISSIONERS
Code
References to titles of officers, employees, public bodies .. 1-7
Comprehensive land development (Appendix A). See that subject
Definitions and rules of construction
Delegation of authority 1-4
Joint authority 1-4
Emergency services
911 emergency answering service
Board of governors 30-68
Historic preservation
Historic preservation commission ..... 50-31 et seq.
See: HISTORIC PRESERVATION
Taxation
Board of tax assessors ..... 66-31 et seq.
See: TAXATION

BOATS, DOCKS AND WATERWAYS
Comprehensive land development
Required subdivision improvements

Section

BOATS, DOCKS AND WATERWAYS (Cont'd.)
Monuments
Lot lines extending into rivers and streams, (App. A § 141.3)
Floods; generally ..... 42-31 et seq.
See: FLOODS

BONDS
Code
Matters not affected by Code 1-14
Definitions and rules of construction..... 1-4
Roads
Roads and rights-of-way usage
Surety bond 58-66
Soil erosion and sedimentation control
Bond forfeiture 34-179
Stormwater management
Permit procedures and requirements
Performance and maintenance bonds 18-275

BOUNDARIES
Code
Matters not affected by Code 1-14
Comprehensive land development
Establishment of districts
Rules for determining boundaries, (App. A § 44)
Historic preservation
Designation of historic districts and landmarks
Designation of historic district..... 50-74(b)
Designation of landmark
Boundary description..... 50-75(b)
Requirements regarding district boundaries 50-79

BRUSH
Vegetation; generally..... 34-111 et seq.
See: NUISANCES

BUFFERS
Comprehensive land development (Appendix A). See that subject

BUILDINGS, CONSTRUCTION AND RELATED ACTIVITIES
Civil emergencies
Registration of building and repair services during a state of emergency ..... 26-126 et seq.
See: CIVIL EMERGENCIES
Codes
Construction codes. See herein that subject
Comprehensive land development (Appendix A). See that subject

Section

BUILDINGS, CONSTRUCTION AND RELATED ACTIVITIES (Cont'd.)
Construction codes
Adopted 18-31
Applicability 18-34
Building department 18-33
Enforcement 18-32
Liability 18-36
Records 18-35
Right of entry 18-37
Stop work orders 18-38
Violations and penalties 18-39
Definitions
Flow-rate restrictions on plumbing fixtures 18-112
Fire prevention and protection; generally ..... 38-31 et seq.
See: FIRE PREVENTION AND PROTECTION
Floods
Flood damage prevention
Flood hazard reduction, provisions for
Building standards for streams without established base flood elevations and/or floodway 42-103
Elevated buildings 42-92
New construction and/or substantial improvements 42-99, 42-100
Flow-rate restrictions on plumbing fixtures
Definitions 18-112
Enforcement; penalty for violation of article 18-116
Exceptions 18-115
Product certification 18-114
Purpose of article 18-111
Standards for fixtures 18-113
Historic preservation; generally ..... 50-1 et seq.
See: HISTORIC PRESERVATION
Minimum health and safety standards for pre-owned manufactured homes
Conditions 18-377
Definitions 18-376
Enforcement 18-380
Minimum health and safety standards 18-379
Penalties 18-381
Permitting, inspection, certificate of occupancy and fees 18-378
Noise control; generally ..... 34-31 et seq.
See: NOISE CONTROL
Permits and inspections
Accounting 18-75
Building permit valuations 18-76
Misrepresentation of application 18-73
Permit application 18-72
Prescribed fees 18-74
Required inspections 18-77
Revocation 18-78

Section

BUILDINGS, CONSTRUCTION AND RELATED ACTIVITIES (Cont'd.)
Scope 18-71
Roads; generally ..... 58-31 et seq.
See: ROADS
Self inspection by plumbers, utility contractors 18-1
Soil erosion and sedimentation control; generally ..... 34-171 et seq.
See: SOIL EROSION AND SEDIMENTATION CONTROL
Solid waste; generally ..... 62-1 et seq.
See: SOLID WASTE
Stormwater management
Applicability 18-252
Compatibility with other regulations 18-254
Construction inspections of post-development stormwater management system
Final inspection and as built plans 18-312
Inspections to ensure plan compliance during construction 18-311
Definitions 18-257
Designation of administrator 18-253
Ongoing inspection and maintenance of stormwater facilities and practices
Failure to maintain 18-324
Long-term maintenance inspection of stormwater facilities and practices 18-321
Records of maintenance activities 18-323
Right-of-entry for inspection 18-322
Permit procedures and requirements
Application
Procedure 18-276
Review fees 18-277
Modifications for off-site facilities 18-278
Performance and maintenance bonds 18-275
Permit application requirements 18-271
Stormwater concept plan and consultation meeting 18-272
Stormwater management inspection and maintenance agreements 18-274
Stormwater management plan requirements 18-273
Post-development stormwater management performance criteria
Applicability 18-291
Dam design guidelines 18-299
Drainage system guidelines 18-298
Extreme flooding protection 18-295
Overbank flooding protection 18-294
Stormwater credits for nonstructural measures 18-297
Stream channel protection 18-293
Structural stormwater controls 18-296
Water quality 18-292
Purpose and intent 18-251

Section

BUILDINGS, CONSTRUCTION AND RELATED ACTIVITIES (Cont'd.)
Severability 18-255
Stormwater design manual 18-256
Violations, enforcement and penalties
Notice of violation 18-342
Penalties 18-343
Violation; relief 18-341
Unsafe buildings
Determination of violation 18-228
Implementation 18-230
Power and duties of enforcement officer 18-227
Right of appeal 18-229
Title and scope 18-226
Vegetation; generally ..... 34-111 et seq.
See: NUISANCES
Water and sewers; generally ..... 74-31 et seq.
See: WATER AND SEWERS

BUSINESSES AND BUSINESS REGULATIONS
Adult entertainment establishments; generally ..... 10-31 et seq.
See: ADULT ENTERTAINMENT ESTABLISHMENTS
Alcoholic beverages; generally ..... 6-1 et seq.
See: ALCOHOLIC BEVERAGES
Civil emergencies
Overcharging for goods, materials, services, and housing during state of emergency; prohibited 26-3
Code
Liability for violations by corporations and other associations 1-20
Comprehensive land development (Appendix A). See that subject
Emergency services; generally ..... 30-1 et seq.
See: EMERGENCY SERVICES
Occupational taxes and regulatory fees ..... 22-61 et seq.
See: TAXATION
Pawnbrokers ..... 22-31 et seq.
See: PAWNBROKERS
Roads
Roads and rights-of-way usage
Logging, chipping, and pulpwood specifics 58-69
Taxation ..... 66-61 et seq.
See: TAXATION

C

C- DISTRICTS
Comprehensive land development (Appendix A). See that subject

Section

C-1 NEIGHBORHOOD COMMERCIAL DISTRICT
Comprehensive land development (Appendix A). See that subject

C-2 GENERAL COMMERCIAL DISTRICT
Comprehensive land development (Appendix A). See that subject

C-3 ENTERTAINMENT COMMERCIAL DISTRICT
Comprehensive land development (Appendix A). See that subject

CANVASSERS. See: PEDDLERS, CANVASSERS AND SOLICITORS

CARS. See: TRAFFIC AND VEHICLES

CATCHLINES IN CODE
Code
Catchlines of sections; history notes and references 1-5

CEMETERIES
Comprehensive land development
Special provisions
Nonstructural uses, (App. A § 98.4)
Offenses
Public parks, recreation facilities, and cemeteries; hours of operation 54-4

CERTIFICATES, CERTIFICATION
Buildings, construction and related activities
Flow-rate restrictions on plumbing fixtures
Product certification..... 18-114
Registration of building and repair services during a state of emergency ..... 26-126 et seq.
See: CIVIL EMERGENCIES
Comprehensive land development (Appendix A). See that subject
Historic preservation
Application for certificates of appropriateness..... 50-111 et seq.
See: HISTORIC PRESERVATION
Soil erosion and sedimentation control
Permit procedures
Education; certification 34-210
Plan requirements
Certification of plans; contents ..... 34-203(c)
Taxation
Occupational taxes and regulatory fees
Occupation tax certificate 22-64
Transfer of occupation tax certificate to a new
Location 22-74
Owner 22-73

Section

CHAIRMAN
Board of commissioners 2-31

CHILDREN. See: MINORS

CHRISTMAS DAY
Alcoholic beverages
Beer and wine
Sale prohibited on Christmas Day 6-33

CHURCHES
Noise control 34-43

CITATIONS
Health and sanitation
State rules, regulations
Issuance of citation 46-32

CIVIL EMERGENCIES
Curfews during times of emergency or disaster 26-1
Emergencies. See that subject
Emergency management
Definitions 26-31
Emergency authority
Conditions authorizing declaration of emergency 26-51
Duration 26-54
Effective period of emergency powers 26-53
Powers after declaration 26-52
Specified area 26-55
Emergency management agency
Director 26-72
Duties, generally 26-73
Financial assistance 26-78
Immunity of state and political subdivisions 26-79
Local emergency management agency plan 26-80
Local emergency management powers 26-77
Participation 26-71
Penalties 26-76
Powers during an emergency or disaster 26-74
Volunteers 26-75
Unlawful acts during emergencies 26-32
Emergency services; generally ..... 30-1 et seq.
See: EMERGENCY SERVICES
Floods; generally ..... 42-31 et seq.
See: FLOODS
Overcharging for goods, materials, services, and housing during state of emergency; prohibited 26-3
Registration of building and repair services during a state of emergency
Building contractor registration required 26-126
Definitions 26-127
Display of registration certification 26-132

Section

CIVIL EMERGENCIES (Cont'd.)
Effective date; expiration 26-136
Exemptions 26-135
Penalties 26-130
Revocation; suspension 26-133
Severability 26-134
Transferability 26-131
Registration fees 26-129
Registration; certification 26-128
Suspension of portions of the Code of Ordinances and other formalities during a state of emergency 26-2

CLERKS
County clerk. See that subject

CODE OF ORDINANCES*
Acts by agent 1-10
Adoption of Code; name 1-1
Altering Code 1-18
Amendments to Code 1-16
Catchlines of sections; history notes and references 1-5
Causing, permitting, abetting or concealing prohibited act 1-11
Civil emergencies
Suspension of portions of the Code of Ordinances and other formalities during a state of emergency 26-2
Construction of provisions 1-12
Definitions and rules of construction 1-4
Effect of repeal or expiration of resolution 1-13
Form of Code; repository; maintenance 1-3
General penalty, continuing violations; authority granted to court 1-19
Grammatical interpretation
Gender ..... 1-9(1)
Singular and plural ..... 1-9(2)
Tenses ..... 1-9(3)
Incorporation of resolutions, etc. 1-2
Interpretation of language 1-8
Liability for violations by corporations and other associations 1-20
Matters not affected by Code 1-14
Provisions considered continuations of existing resolutions 1-15
References to titles of officers, employees, public bodies 1-7
Severability of parts of Code 1-6
Supplementation of Code 1-17

***Note—**The adoption, amendment, repeal, omissions, effective date, explanation of numbering system and other matters pertaining to the use, construction and interpretation of this Code are contained in the adopting ordinance and preface which are to be found in the preliminary pages of this volume.

Section

CODES (Generally)
Buildings, construction and related activities..... 18-31 et seq.
See: BUILDINGS, CONSTRUCTION AND RELATED ACTIVITIES
Historic preservation
Conformity with building codes 50-5

COMBUSTIBLES AND INFLAMMABLES
Comprehensive land development
Special provisions; automobile service stations
Storage of inflammable products, (App. A § 96.6)
Fire prevention and protection; generally ..... 38-31 et seq.
See: FIRE PREVENTION AND PROTECTION

COMMISSIONER
Definitions and rules of construction..... 1-4

COMMITTEES AND COMMISSIONS. See: BOARDS, COMMITTEES AND COMMISSIONS

COMMUNICATIONS
Comprehensive land development
Special provisions; nonstructural uses
Communication towers, (App. A § 98.5)

COMPENSATION, SALARIES, ETC. See: OFFICERS AND EMPLOYEES

COMPLAINTS
Water and sewers
Water
Monthly bill
Complaints; adjustments..... 74-50

COMPREHENSIVE LAND DEVELOPMENT (Appendix A)
Access
Exceptions and modifications
Access to public streets 103
General requirements and minimum standards of design for the subdivision of land
General design requirements
Access 131.3
Special provisions
Automobile service stations
Access to site 96.3
Administration. See herein specific subjects
Adult entertainment establishments (Adopted 8-3-93). See herein: Special Provisions
AG-1 Agricultural/Rural district
Use Requirements by District. See herein that subject
AG-R Single-Family Rural Residential District..... 71.3

Section

COMPREHENSIVE LAND DEVELOPMENT (Appendix A) (Cont'd.)
Amendments
Establishment of districts
Map amendment 43
Exceptions and modifications
Planned unit developments
Miscellaneous provisions
Amendments and additions..... 101.61
Other requirements by districts
Bypass design overlay district..... 86.8
Procedures for requesting an amendment to the comprehensive land development resolution
Initiating the hearing
Amendments proposed by the board of commissioners 151.2
Notice of hearings
Amendments proposed by the board of commissioners 152.1
Procedures for requesting an amendment to the comprehensive land development resolution. See herein that subject
Appeals
Duties and powers of the board of appeals and adjustments. See herein that subject
Zoning administration
Establishment of the board of appeals and adjustments. See herein that subheading
Application of regulations
Building height and density
Exceptions 52.2
Prohibitions..... 52.1
Signs..... 52.3
Lots and yards
Application of requirements for multiple structures ... 53.2
Dimensions and area 53.1
Projection of buildings into required yards..... 53.4
Reduction in area or dimension..... 53.3
Use 51
Automobile service stations. See herein: Special Provisions
Board of commissioners
Procedures for requesting an amendment to the comprehensive land development resolution
Conducting the hearing
Hearings held by the board of commissioners, planning and zoning commission, or historic preservation commission..... 153
Initiating the hearing
Amendments proposed by the board of commissioners 151.2

Section

COMPREHENSIVE LAND DEVELOPMENT (Appendix A) (Cont'd.)
Application by parties other than the board of commissioners 151.1
Notice of hearings
Amendments proposed by parties other than the board of commissioners 152.2
Amendments proposed by the board of commissioners 152.1
Procedures for subdivision plat approval
Final plat specifications
Certification of approval by the board of commissioners 126.7
Required subdivision improvements
Administrative procedures
Board of commissioner's responsibility 148.52
Inspections and approval by the board of commissioners 148.2
Official acceptance by the board of commissioners... 148.3
Boards, committees and commissions
Procedures for requesting an amendment to the comprehensive land development resolution
Conducting the hearing
Hearings held by the board of commissioners, planning and zoning commission, or historic preservation commission..... 153
Procedures for subdivision plat approval
Certificate of final approval by the planning and zoning commission..... 127
Zoning administration
Establishment of the board of appeals and adjustments. See herein that subheading
Procedure for application for a conditional use
Submittal to planning and zoning commission 117.2
Buffers
Other requirements by districts. See herein that subject
Buildings and building regulations
Exceptions and modifications
Front and side yard setbacks for dwellings..... 104
Site built homes..... 106
Underground buildings..... 105
Other requirements by districts. See herein that subject
Required subdivision improvements. See herein that subject
Special provisions. See herein that subject
Specific district regulations. See herein: Use Requirements by District
Businesses
Special provisions. See herein that subject

Section

COMPREHENSIVE LAND DEVELOPMENT (Appendix A) (Cont'd.)
Use requirements by district
Commercial districts. See herein that subject
C-1 Neighborhood Commercial District
Use Requirements by District. See herein that subject
C-2 General Commercial District
Use Requirements by District. See herein that subject

Section

COMPREHENSIVE LAND DEVELOPMENT (Appendix A) (Cont'd.)
C-3 Entertainment Commercial District
Use Requirements by District. See herein that subject
Certificates, certification
Other requirements by districts
HD Historic Overlay Zoning District
Certificate of appropriateness required..... 83.1
Procedures for subdivision plat approval
Final plat specifications. See herein that subheading
Zoning administration
Permits and certificates. See herein that subheading
Conditional uses
Specific district regulations. See herein: Use Requirements by District
Uses, generally. See herein: Uses
Definitions of terms used in this resolution
General..... 31
Specific definitions..... 32
Definitions. See herein specific subjects
Districts
Exceptions and modifications
Planned unit developments
Procedure for approval of a Planned Unit Development District..... 101.2
Other requirements by districts. See herein that subject
Special provisions
Signs prohibited in all districts..... 97.5
Specific district regulations. See herein: Use Requirements by District
Enforcement and remedies
Remedies..... 164
Subdivision enforcement..... 163
Violation..... 161
Zoning enforcement..... 162
Establishment of districts
Comprehensiveness of zoning districts..... 45
Division of the unincorporated area of the county into districts..... 41
Incorporation of the zoning maps..... 42
Map amendment..... 43
Rules for determining boundaries..... 44
Exceptions and modifications
Access to public streets..... 103
Front and side yard setbacks for dwellings..... 104
Planned unit developments
Conditions..... 101.1
Final plat required..... 101.4
Miscellaneous provisions
Amendments and additions..... 101.61

Section

COMPREHENSIVE LAND DEVELOPMENT (Appendix A) (Cont'd.)
Deed restrictions 101.62
Preliminary site plan required 101.3
Procedure for approval of a Planned Unit Development District 101.2
Review standards 101.5
Site design requirements
Site design, detail 101.72
Site design, general 101.71
Site built homes 106
Underground buildings 105
Yard requirements 102
Fences, walls, hedges and enclosures
Other requirements by districts
Buffer and landscape standards for gateway overlay zoning district added 7-6-99 ..... 84.9
Gateway Overlay Zoning District
Other requirements by districts
Buffer and landscape standards for Gateway Overlay Zoning District added 7-6-99. See herein that subheading
General provisions
Classification of streets 65
Control of curb cuts and vision clearance
Curb cuts 64.1
Vision clearance 64.2
Minimum distance between buildings 68
Nonconforming lots, nonconforming uses of land, nonconforming structures, and nonconforming uses of structures and premises
Avoidance of undue hardship 61.2
Incompatibility of nonconforming uses 61.1
Nonconforming lots of record in combination 61.4
Nonconforming structures 61.6
Nonconforming uses of land 61.5
Nonconforming uses of structures or structures and premises in combination 61.7
Single nonconforming lots of record 61.3
Off-street automobile parking
General requirements 62.1
Parking space requirements for all districts 62.2
Site requirements 62.3
Off-street loading and unloading spaces
Bus and trucking terminals 63.4
Connection to street or alley 63.2
Location of off-street loading spaces 63.5
Permanent reservation 63.6
Required loading space 63.3
Size of off-street loading spaces 63.1

Section

COMPREHENSIVE LAND DEVELOPMENT (Appendix A) (Cont'd.)
Screening and lighting 67
Storage and parking of trailers and vehicles 66
General requirements and minimum standards of design for the subdivision of land
Design standards for blocks and lots
Building lines 135.3
Design lengths and widths 135.1
Double frontage lots 135.5
Lot sizes 135.2
Lots abutting on public streets 135.4
General design requirements
Access 131.3
Conformance to adopted major thoroughfare plans 131.4
Name of subdivision 131.2
Suitability of land 131.1
Through traffic 131.5
General requirements for streets and other rights-of-way
Alleys 132.8
Connections with future subdivisions 132.2
Continuation of existing streets 132.1
Cul-de-sacs 132.5
Development along major street, limited-access highway or railroad right-of-way 132.6
Half streets 132.7
Reserve strips and easements 132.9
Street jogs 132.4
Street names 132.3
Provision of public land
Dedication 136.3
Dedication or reservation for public use 136.1
Land not required or suited for public use 136.2
Reservations 136.4
Right-of-way width requirements 133
Street design requirements
Additional width on existing streets 134.3
Right-of-way radius 134.2
Street intersections 134.1
Groundwater Recharge Area Overlay District. See herein: Water Resource Protection Overlay Districts 4th Draft
HD Historic Overlay Zoning District. See herein: Other Requirements by Districts
Height
Application of regulations
Building height and density 52
Other requirements by districts
Minimum setbacks and maximum building heights 82
Home occupations. See herein: Special Provisions

Section

COMPREHENSIVE LAND DEVELOPMENT (Appendix A) (Cont'd.)
Improvements. See herein: Public Works and Improvements
Industrial districts
Use requirements by district
Wholesale and Industrial Districts. See herein that subheading
Landscaping
Other requirements by districts
Buffer and landscape standards for Gateway Overlay Zoning District added 7-6-99 84
Legal status provisions
Conflict with other laws 171
Effective date 174
Repealed resolutions and ordinances 173
Validity 172
Licenses and permits
Other requirements by districts
HD Historic Overlay Zoning District
Affect on zoning permit process 83.2
Water Resource Protection Overlay Districts 4th draft
Wetlands Protection Overlay District
Wetland development permit requirements 85.54
Required subdivision improvements
Basic construction requirements for all classes of streets
Road permit 144.7
Roadway surfacing and paving 145
Zoning administration
Permits and certificates. See herein that subheading
Lights and lighting
General provisions
Screening and lighting 67
Loading and unloading
General provisions
Off-street loading and unloading spaces 63
Lots
General requirements and minimum standards of design for the subdivision of land
Design standards for blocks and lots. See herein that subheading
Other requirements by districts. See herein that subject
Procedures for subdivision plat approval
Subdivisions not exceeding ten lots 129
Required subdivision improvements
Monuments
Lot lines extending into rivers and streams 141.3
Special classification of streets for construction
Private roads; number of lots permitted 142.41
Special provisions
Accessory and temporary buildings

Section

COMPREHENSIVE LAND DEVELOPMENT (Appendix A) (Cont'd.)
Additional dwellings on a single lot
Additional dwellings on a lot less than ten acres in size 94.1
Additional dwellings on a lot ten acres or greater. 94.2
Manufactured (mobile) homes and manufactured home parks
General standards for manufactured homes on individual lots 91.3
Specific district regulations. See herein: Use Requirements by District
M- districts. See herein: Use Requirements by District
M-1 Wholesale and Light Industrial District
Use Requirements by District. See herein that subject
M-2 General Industrial District
Use Requirements by District. See herein that subject
Manufactured (mobile) homes and manufactured home parks. See herein: Special Provisions
Maps. See herein: Surveys, Maps and Plats
Nonconformance
General provisions
Nonconforming lots, nonconforming uses of land, nonconforming structures, and nonconforming uses of structures and premises 61
General requirements and minimum standards of design for the subdivision of land
General design requirements
Conformance to adopted major thoroughfare plans .. 131.4
Procedures for subdivision plat approval
Final plat specifications
Conformance with the preliminary plat 126.1
Other requirements by districts
Buffer and landscape standards for gateway overlay zoning district added 7-6-99
Applicability 84.1
Berms 84.8
Fences and walls 84.9
General provisions
Buffers 84.31
Frontage strips 84.32
Landscape strips 84.33
Parking lot landscape 84.34
Screening 84.35
Grandfathered projects 84.7
Listing of native trees and shrubs 84.10
Maintenance 84.13
Minimum buffer and frontage strip size 84.4
Specific definitions
Buffer 84.2.a

Section

COMPREHENSIVE LAND DEVELOPMENT (Appendix A) (Cont'd.)
- Frontage strip 84.2.b
- Gateway 84.2.c
- Landscape strip 84.2.e
- Landscaping 84.2.d
- Major change 84.2.f
- Owner 84.2.g
- Screening 84.2.h
- Specialist 84.2.i
- Tree 84.2.j
- Temporary buffers
  - Buffer adjacent to land disturbing activities 84.5.1
  - Time constraints 84.52
- Tree planting specifications 84.12
- Tree protection 84.11
- Variance standards 84.6

Bypass design overlay district
- Amendments 86.8
- Applicability 86.6
- Conformance with design guidelines 86.5
- Definitions 86.2
- Design review board 86.7
- Establishment of district 86.3
- Purpose and intent 86.1
- Relationship to underlying zoning regulations 86.4

HD Historic Overlay Zoning District
- Affect on zoning permit process 83.2
- Certificate of appropriateness required 83.1
- Failure to obtain a certificate of appropriateness 83.3

Minimum lot area, lot width, and maximum lot coverage
- Table of requirements by district and use 81.1

Minimum setbacks and maximum building heights 82

Water Resource Protection Overlay Districts 4th draft
- Definitions 85.3
- Establishment of water resource overlay districts 85.2
- Groundwater Recharge Area Overlay District
  - District delineation 85.43
  - Exemptions 85.45
  - Findings of fact 85.41
  - Permitted uses 85.44
  - Purpose 85.42
- Purpose 85.1
- River Corridor Protection Overlay District
  - Establishment of Ocmulgee River Corridor Protection Overlay District 85.72
  - Exemptions 85.74
  - Protection criteria 85.73
  - Purpose 85.71

Section

COMPREHENSIVE LAND DEVELOPMENT (Appendix A) (Cont'd.)
Water Supply Watershed Protection Overlay District
Establishment of Water Supply Watershed Overlay District 85.62
Exemptions 85.64
Protection criteria 85.63
Purpose 85.61
Wetlands Protection Overlay District
District delineation 85.53
Findings of fact 85.51
Permitted uses 85.55
Prohibited uses 85.56

Section

COMPREHENSIVE LAND DEVELOPMENT (Appendix A) (Cont'd.)
Purpose 85.52
Wetland development permit requirements..... 85.54
Parking
General provisions
Off-street automobile parking..... 62
Storage and parking of trailers and vehicles..... 66
Permits. See herein: Licenses and Permits
Permitted uses
Specific district regulations. See herein: Use Requirements by District
Uses, generally. See herein: Uses
Planned unit developments. See herein: Exceptions and Modifications
Planning and zoning commission
Procedures for requesting an amendment to the comprehensive land development resolution
Conducting the hearing
Hearings held by the board of commissioners, planning and zoning commission, or historic preservation commission 153
Procedures for subdivision plat approval
Certificate of final approval by the planning and zoning commission..... 127
Plats. See herein: Surveys, Maps and Plats
Procedures for requesting an amendment to the comprehensive land development resolution
Conducting the hearing
Hearings held by the board of commissioners, planning and zoning commission, or historic preservation commission
Assignment of conditions..... 153.17
Assignment of different zoning district..... 153.16
Closing the hearing..... 153.15
Discussion and recommendation 153.14
Matter presented..... 153.12
Opening the hearing..... 153.11
Speakers 153.13
Initiating the hearing
Amendments proposed by the board of commissioners.. 151.2
Application by parties other than the board of commissioners 151.1
Membership, appointment and term 157
Notice of hearings
Amendments proposed by parties other than the board of commissioners 152.2
Amendments proposed by the board of commissioners.. 152.1
Printing and distributing this article..... 156
Request for rehearing 155

Section

COMPREHENSIVE LAND DEVELOPMENT (Appendix A) (Cont'd.)
Standards for decision 154
Procedures for subdivision plat approval
Certificate of final approval by the planning and zoning commission 127
Final plat procedure
Application for final plat approval 125.1
Review of the final plat
Automatic approval 125.24
Disapproval 125.23
Notice of hearing 125.21
Office approval 125.22
Final plat specifications
Additional specifications 126.3
Certification of approval by the board of commissioners 126.7
Conformance with the preliminary plat 126.1
Health department certification 126.6
Original tracing specifications 126.2
Owner's certification 126.5
Surveyor's certification 126.4
Platting-authority 121
Pre-application review 122
Preliminary plat specifications
Approval from the health department 124.5
Certificate of preliminary approval 124.6
Ground elevations 124.3
Information to be provided on preliminary plat 124.4
Initiation of installing physical improvements 124.7
Scale 124.1
Sheet size 124.2
Procedure for preliminary plat approval
Application for preliminary plat approval 123.1
Georgia Department of Transportation recommendation 123.2
Notice of hearing 123.3
Review of preliminary plat
Automatic approval 123.44
Disapproval 123.43
Expiration 123.42
Preliminary approval 123.41
Recording of final plat
Revisions to recorded plat 128.1
Subdivisions not exceeding ten lots 129
Public works and improvements
Procedures for subdivision plat approval
Preliminary plat specifications
Initiation of installing physical improvements 124.7
Required subdivision improvements. See herein that subject

Section

COMPREHENSIVE LAND DEVELOPMENT (Appendix A) (Cont'd.)
Special provisions
Automobile service stations
Other site improvements 96.5
Purpose and enactment ..... Art. I
R- districts. See herein: Use Requirements by District
R-1 Single-Family Residential District
Single-family attached residences 92
Use Requirements by District. See herein that subject
R-1A Single-Family Residential District 72.7
R-1-R Single-Family Rural Residential District
Use Requirements by District. See herein that subject
R-2 Two-Family Residential District
Use Requirements by District. See herein that subject
R-3 Multifamily Residential District
Use Requirements by District. See herein that subject
Required subdivision improvements
Additional street design requirements
Grades, horizontal curves, tangents, and sight distances 143.1
Vertical curves 143.2
Administrative procedures
Board of commissioner's responsibility 148.52
Cost improvements 148.5
Estimated costs for construction and installation 148.54
Inspections and approval by the board of commissioners 148.2
Maintenance of completed work 148.4
Official acceptance by the board of commissioners 148.3
Property owner's responsibility 148.53
Subdividers' responsibility 148.51
When construction may begin 148.1
Basic construction requirements for all classes of streets
Grading 144.1
Installation of driveways 144.5
Installation of utilities 144.3
Road permit 144.7
Road striping 144.6
Slopes and shoulder improvements 144.4
Storm drainage 144.2
Installation of utilities
Gas 146.3
Sewer 146.2
Water 146.1
Monuments
Lot lines extending into rivers and streams 141.3
Property line monuments 141.2
Right-of-way monuments 141.1
Roadway surfacing and paving
Class III streets 145.6
Curbs and gutters 145.5

Section

COMPREHENSIVE LAND DEVELOPMENT (Appendix A) (Cont'd.)
Minimum pavement width 145.3
Pavement base 145.1
Pavement breaks for utility connections 145.4
Road patching standards 145.11
Thickness of pavement 145.2
Sidewalks and street signs
Location of sidewalks 147.1
Location of street identification signs 147.4
Sidewalk construction 147.2
Street signs required 147.3
Special classification of streets for construction
Class I street 142.1
Class II street 142.2
Class III street 142.3
Private roads
Cost responsibility 142.42
Number of Lots permitted 142.41
Private road construction 142.43
Signs 142.44
Testing
Financial responsibility 149.2
Proofroll 149.3
Required notification 149.1
Residential districts. See herein: Use Requirements by District
River Corridor Protection Overlay District. See herein: Water Resource Protection Overlay Districts 4th Draft
R-MH Manufactured Home Residential District
Use Requirements by District. See herein that subject
R-R Rural Residential District
Use Requirements by District. See herein that subject
Setbacks
Exceptions and modifications
Front and side yard setbacks for dwellings 104
Other requirements by districts
Minimum setbacks and maximum building heights 82
Short title ..... Art. II
Signs
Application of regulations
Building height and density 52.3
Required subdivision improvements
Special classification of streets for construction
Private roads 142.44
Special provisions
Signs. See herein that subject
Special provisions
Accessory and temporary buildings
Accessory buildings 93.1

Section

COMPREHENSIVE LAND DEVELOPMENT (Appendix A) (Cont'd.)
Additional dwellings on a single lot
Additional dwellings on a lot less than ten acres in size 94.1
Additional dwellings on a lot ten acres or greater 94.2
Temporary buildings 93.2
Adult entertainment establishments (Adopted 8-3-93)
Definitions 99.2
General performance standards 99.4
Intent 99.1
Prohibited activities 99.3
Specific standards for adult dancing establishments 99.5
Automobile service stations
Access to site 96.3
Gasoline pump islands 96.4
Location 96.1
Other site improvements 96.5
Site requirements 96.2
Storage of inflammable products 96.6
Home occupations
Cottage industries 95.2
Expiration of permit 95.3
Special requirements 95.1
Manufactured (mobile) homes and manufactured home parks
Classification of manufactured homes 91.1
General standards for manufactured home parks 91.2
General standards for manufactured homes on individual lots 91.3
Site built homes 106
Temporary use of manufactured homes 91.4
Nonstructural uses
Campgrounds 98.3
Cemeteries 98.4
Communication towers 98.5
Development of natural resources 98.2
Open or common space 98.1
Signs
Conditional uses, signs as 97.7
Definitions, supplemental 97.2
Exempt signs 97.4
General provisions 97.3
Illuminated signs (special requirements) 97.12
Intent 97.1
Maintenance, removal of signs 97.13
Permitted uses, signs as 97.6
Portable signs 97.8
Prohibited signs 97.5
Projection/canopy signs (special requirements) 97.9

Section

COMPREHENSIVE LAND DEVELOPMENT (Appendix A) (Cont'd.)
Reader boards (special requirements) 97.10
Wall signs (special requirements) 97.11
Single-family attached residences 92
Storage
General provisions
Storage and parking of trailers and vehicles 66
Special provisions
Automobile service stations
Storage of inflammable products 96.6
Streets, sidewalks and other public places
Exceptions and modifications
Access to public streets 103
General requirements and minimum standards of design for the subdivision of land
Design standards for blocks and lots
Lots abutting on public streets 135.4
General requirements for streets and other rights-of-way. See herein that subheading
Street design requirements 134
Required subdivision improvements
Additional street design requirements 143
Sidewalks and street signs 147
Special classification of streets for construction 142
Required subdivision improvements. See herein that subject
Subdivisions
Enforcement and remedies
Subdivision enforcement 163
Procedures for subdivision plat approval. See herein that subject
Required subdivision improvements. See herein that subject
Surveys, maps and plats
Establishment of districts
Incorporation of the zoning maps 42
Map amendment 43
Exceptions and modifications
Planned unit developments
Final plat required 101.4
Procedures for subdivision plat approval. See herein that subject
Traffic and vehicles
General requirements and minimum standards of design for the subdivision of land
General design requirements
Through traffic 131.5

Section

COMPREHENSIVE LAND DEVELOPMENT (Appendix A) (Cont'd.)
Use requirements by district
AG-1 Agricultural/Rural district
AG-1 Agricultural/Rural district 71.1
Conditional uses 71.2
AG-R Single-Family Rural Residential District 71.3
Conditional uses 71.32
Permitted uses 71.31
Commercial districts
C-1 Neighborhood Commercial District
Conditional uses 73.13
Permitted uses 73.12
Required conditions 73.11
C-2 General Commercial District
Conditional uses 73.23
Permitted uses 73.22
Required conditions 73.21
C-3 Entertainment Commercial District
Permitted uses 73.32
Required conditions 73.31
Residential districts
R-1 Single-Family Residential District
Conditional uses 72.22
Permitted uses 72.21
R-1A Single-Family Residential District 72.7
Conditional uses 72.72
Permitted uses 72.71
R-1-R Single-Family Rural Residential District
Conditional uses 72.62
Permitted uses 72.61
R-2 Two-Family Residential District
Conditional uses 72.32
Permitted uses 72.31
R-3 Multifamily Residential District
Conditional uses 72.42
Permitted uses 72.41
R-MH Manufactured Home Residential District
Conditional uses 72.52
Permitted uses 72.51
R-R Rural Residential District
Conditional uses 72.12
Permitted uses 72.11
Wholesale and Industrial Districts
M-1 Wholesale and Light Industrial District
Conditional uses 74.12
Permitted uses 74.11
M-2 General Industrial District
Conditional uses 74.22
Permitted uses 74.21

Section

COMPREHENSIVE LAND DEVELOPMENT (Appendix A) (Cont'd.)
Uses (permitted uses, conditional uses, accessory uses, etc.)
Other requirements by districts. See herein that subject
Special provisions
Manufactured (mobile) homes and manufactured home parks
Temporary use of manufactured homes 91.4
Nonstructural uses. See herein that subheading
Specific district regulations. See herein: Use Requirements by District
Zoning administration
Procedure for application for a conditional use. See herein that subheading
Utilities
Required subdivision improvements
Basic construction requirements for all classes of streets
Installation of utilities. See herein that subheading
Roadway surfacing and paving
Pavement breaks for utility connections 145.4
Variances
Other requirements by districts
Buffer and landscape standards for gateway overlay zoning district added 7-6-99
Variance standards 84.6
Zoning administration
Duties and powers of the board of appeals and adjustments
Use variance prohibited..... 114.3
Variances..... 114.2
Procedure for application for a variance from the provisions of this resolution. See herein that subheading
Vegetation
Other requirements by districts
Buffer and landscape standards for Gateway Overlay Zoning District added 7-6-99. See herein that subheading
Walls. See herein: Fences, Walls, Hedges and Enclosures
Water and sewers. See herein: Utilities
Water Resource Protection Overlay Districts 4th Draft. See herein Other Requirements by Districts
Water Supply Watershed Protection Overlay District. See herein: Water Resource Protection Overlay Districts 4th Draft
Wetlands Protection Overlay District. See herein: Water Resource Protection Overlay Districts 4th Draft
Yards and other open spaces
Application of regulations
Lots and yards..... 53

Section

COMPREHENSIVE LAND DEVELOPMENT (Appendix A) (Cont'd.)
Exceptions and modifications
Front and side yard setbacks for dwellings 104
Yard requirements..... 102
Special provisions
Nonstructural uses
Open or common space 98.1
Zoning
Enforcement and remedies
Zoning enforcement 162
Procedures for requesting an amendment to the comprehensive land development resolution
Conducting the hearing
Hearings held by the board of commissioners, planning and zoning commission, or historic preservation commission 153
Procedures for subdivision plat approval
Certificate of final approval by the planning and zoning commission..... 127
Zoning administration
Duties and powers of the board of appeals and adjustments
Appeals of administrative decisions..... 114.1
Use variance prohibited 114.3
Variances 114.2
Duties and powers of the zoning enforcement officer 111
Establishment of the board of appeals and adjustments
Initial appointment 113.11
Membership..... 113.1
Public offices held 113.13
Rules and procedures 113.2
Vacancies 113.12
Permits and certificates
Certificate of occupancy
Certificate of occupancy required 112.31
Denial of certificate of occupancy 112.33
Issuance of certificate of occupancy..... 112.32
Conditional use permit 112.2
Zoning compliance permit 112.1
Procedure for appeal of an administrative decision before the board of appeals and adjustments
Affect on legal proceedings 115.2
Hearing and decision 115.5
Notification..... 115.4
Referral to the board of appeals and adjustments..... 115.3
Request for hearing 115.1
Procedure for application for a conditional use
Application
Inspection..... 117.11

Section

COMPREHENSIVE LAND DEVELOPMENT (Appendix A) (Cont'd.)
Supplemental documentation provided by the applicant 117.12
Hearing and decision 117.4
Notification 117.3
Submittal to planning and zoning commission 117.2
Procedure for application for a variance from the provisions of this resolution
Application 116.1
Hearing and decision 116.4
Notification 116.3
Referral to board of appeals and adjustments 116.2
Procedures and standards governing the adoption of a zoning ordinance or comprehensive land development resolution
Hearing procedures
Availability 118.14
Decorum and order 118.13
Matter presented 118.11
Speakers 118.12
Standards governing the exercise of zoning powers 118.2

CONDUCT
Board of commissioners
Decorum 2-47
Public participation; decorum ..... 2-48(3)
Offenses
Disorderly conduct 54-1

CONFINEMENT
Animals
Confinement of biting animals 14-19
Specific requirements for confinement 14-3

CONSERVATION
Soil erosion and sedimentation control
Conservation and engineering practices 34-233

CONSTRUCTION (Generally). See: BUILDINGS, CONSTRUCTION AND RELATED ACTIVITIES

Section

CONTRACTS AND AGREEMENTS
Board of commissioners
Legislation
Adoption of ordinances, resolutions, contracts 2-109
Ordinances, resolutions, contracts and interlocal agreements 2-102
Code
Matters not affected by Code 1-14
Emergency services
911 emergency answering service
Duration of contract..... 30-70
Stormwater management
Permit procedures and requirements
Stormwater management inspection and maintenance agreements..... 18-274
Vegetation
Award of contracts for clearing of lots by county..... 34-116
Water and sewers
Sewers; agreement for service..... 74-131

CORPORATIONS (Generally). See: BUSINESSES

COUNTY
Code
Matters not affected by Code 1-14
Comprehensive land development
Establishment of districts
Division of the unincorporated area of the county into districts, (App. A § 41)
Definitions and rules of construction..... 1-4
Vegetation
Abatement by county; notice of abatement 34-114
Award of contracts for clearing of lots by county..... 34-116

COUNTY CLERK
Definitions and rules of construction..... 1-4

COURTS
Code
General penalty, continuing violations; authority granted to court..... 1-19
Comprehensive land development
Zoning administration
Procedure for appeal of an administrative decision before the board of appeals and adjustments
Affect on legal proceedings, (App. A § 115.2)
Noise control 34-43
Soil erosion and sedimentation control
Judicial review 34-182
Solid waste and scrap tire management
Civil remedies and abatement of nuisance..... 62-39

Section

CRIME, CRIMINALS
Offenses 54-1, 54-2

CUL-DE-SACS
Comprehensive land development
General requirements and minimum standards of design for the subdivision of land
General requirements for streets and other rights-of-way, (App. A § 132.5)

CULVERTS
Roads
Driveway installation policy
County's right-of-way, installation of culverts on..... 58-36

CURBS
Comprehensive land development
General provisions
Control of curb cuts and vision clearance, (App. A § 64)
Required subdivision improvements
Roadway surfacing and paving
Curbs and gutters, (App. A § 145.5)

CURFEW
Civil emergencies
Curfews during times of emergency or disaster 26-1

D

DAMAGE, INJURY, ETC.
Animals
Escape, injury, or theft 14-22
Injured impounded animals 14-15
Floods
Flood damage prevention ..... 42-31 et seq.
Soil erosion and sedimentation control
Permit procedures
Injury by permit holder to property of another 34-209
Water and sewers
Water
Water mains and lines 74-66

DANGEROUS DOGS
Regulation of dangerous and potentially dangerous dogs.... 14-24

DAY
Definitions and rules of construction..... 1-4

DECORUM. See: CONDUCT

DEDICATIONS
Code
Matters not affected by Code 1-14

Section

DEDICATIONS (Cont'd.)
Comprehensive land development
General requirements and minimum standards of design for the subdivision of land
Provision of public land
Dedication, (App. A § 136.3)
Dedication or reservation for public use, (App. A § 136.1)

DEEDS
Comprehensive land development
Exceptions and modifications
Planned unit developments
Miscellaneous provisions
Deed restrictions, (App. A § 101.62)

DEFINITIONS
Definitions and rules of construction 1-4
Other definitions. See specific subjects as indexed

DEMOLITION
Historic preservation
Demolition or relocation applications ..... 50-161 et seq.
See: HISTORIC PRESERVATION
Solid waste
Solid waste and scrap tire management
Regulation of municipal solid waste landfills, inert landfills, construction and demolition landfills and solid waste collection and recycling centers 62-35

DEPARTMENTS AND OTHER AGENCIES OF COUNTY
Board of commissioners ..... 2-31 et seq.
Buildings, construction and related activities
Construction codes
Building department 18-33
Civil emergencies
Emergency management agency..... 26-71 et seq.
See: CIVIL EMERGENCIES
Code
References to titles of officers, employees, public bodies . 1-7
Comprehensive land development
Procedures for subdivision plat approval
Final plat specifications
Health department certification, (App. A § 126.6)
Preliminary plat specifications
Approval from the health department, (App. A § 124.5)
Procedure for preliminary plat approval
Georgia Department of Transportation recommendations, (App. A § 123.2)
Definitions and rules of construction
Delegation of authority 1-4
Joint authority 1-4

Section

DEPARTMENTS AND OTHER AGENCIES OF COUNTY (Cont'd.)
Names of officers, and departments..... 1-4
Fire prevention and protection
Volunteer fire department..... 38-31 et seq.
See: FIRE PREVENTION AND PROTECTION
Historic preservation
Designation of historic districts and landmarks
Notification of other agencies regarding designation... 50-83

DESIGN GUIDELINES MANUAL—BYPASS DESIGN OVERLAY DISTRICT (Appendix B)
Applicability 2
Design review process 3
Design standards
Building facade guidelines 4C
Building siting guidelines 4B
General guidelines 4A
Landscaping guidelines..... 4D
Relocation and demolition criteria 4E
Purpose and intent 1

DEVELOPMENT. See: PLANNING AND DEVELOPMENT

DISASTERS
Civil emergencies ..... 26-31 et seq.
See: CIVIL EMERGENCIES
Emergencies. See that subject

DISEASE CONTROL. See: NUISANCES

DISORDERLY CONDUCT. See: CONDUCT

DISPLAYS. See also: POSTING
Alcoholic beverages
Beer and wine; license 6-71
Emergency services
Identification of residences
Location of display..... 30-32

DISTRICTS
Comprehensive land development (Appendix A). See that subject
Fire prevention and protection
Volunteer fire department..... 38-34
Historic preservation; generally..... 50-1 et seq.
See: HISTORIC PRESERVATION

DOCKS. See: BOATS, DOCKS AND WATERWAYS

DOGS. See: ANIMALS

DRAINAGE
Comprehensive land development

Section

DRAINAGE (Cont'd.)
Required subdivision improvements
Basic construction requirements for all classes of streets
Storm drainage, (App. A § 144.2)
Floods; generally ..... 42-31 et seq.
See: FLOODS
Soil erosion and sedimentation control; generally ..... 34-171 et seq.
See: SOIL EROSION AND SEDIMENTATION CONTROL
Stormwater management ..... 18-251 et seq.
See: BUILDINGS, CONSTRUCTION AND RELATED ACTIVITIES

DRIVEWAYS. See: ROADS

E

EASEMENTS
Comprehensive land development
General requirements and minimum standards of design for the subdivision of land
General requirements for streets and other rights-of-way
Reserve strips and easements, (App. A § 132.9)
Water
Permanent easement restrictions 74-76

ELECTIONS
Alcoholic beverages
Beer and wine; sales on election days 6-34

EMERGENCIES
Board of commissioners
Emergency sessions 2-38
Legislation
Action restricted; emergencies 2-106
Civil emergencies ..... 26-31 et seq.
See: CIVIL EMERGENCIES
Fire prevention and protection; generally ..... 38-31 et seq.
See: FIRE PREVENTION AND PROTECTION
Floods; generally ..... 42-31 et seq.
See: FLOODS
Water
Turning off water for emergency or necessity 74-65

EMERGENCY SERVICES
911 emergency answering service
9-1-1 charges on prepaid wireless service 30-77
Agreement administrator..... 30-76
Audit 30-75
Board of governors 30-68
Claims for aid 30-72
Control of equipment..... 30-65

Section

EMERGENCY SERVICES (Cont'd.)
Definitions 30-61
Division of fiscal responsibility 30-69
Duration of contract 30-70
Established 30-62
Gifts, grants 30-71
Purpose 30-63
Resolution of disputes 30-74
Rules, regulations 30-66
Satisfaction of liabilities 30-73
Scope of service 30-64
Training of employees 30-67
Identification of residences
Location of display 30-32
Required 30-31
Monthly E 911 charge 30-1

EMINENT DOMAIN
Water and sewers
Sewers 74-133

EMPLOYEES. See: OFFICERS AND EMPLOYEES

ENCLOSURES. See: FENCES, WALLS, HEDGES AND ENCLOSURES

ENFORCEMENT. See specific subjects as indexed

ENGINEERING
Soil erosion and sedimentation control
Conservation and engineering practices 34-233

ENTERTAINMENTS. See: AMUSEMENTS AND ENTERTAINMENTS

ENTRY
Buildings, construction and related activities
Construction codes; right of entry 18-37
Mosquito control
Right of entry of health officer 34-146
Soil erosion and sedimentation control
Right of zoning director to enter upon public or private property 34-174

ENVIRONMENT
Animals; generally ..... 14-1 et seq.
See: ANIMALS
Comprehensive land development
Special provisions; nonstructural uses
Development of natural resources, (App. A § 98.2)
Enforcement 34-2
Floods; generally ..... 42-31 et seq.
Noise control ..... 34-31 et seq.

Section

ENVIRONMENT (Cont'd.)
Nuisances ..... 34-81 et seq.
See: NUISANCES
Restriction of outdoor water of landscape 34-1
Soil erosion and sedimentation control..... 34-171 et seq.
See: SOIL EROSION AND SEDIMENTATION CONTROL

EQUIPMENT
Emergency services
911 emergency answering service
Control of equipment 30-65
Floods
Flood damage prevention
Flood hazard reduction, provisions for
Technical, construction equipment 42-93

EROTIC DANCE ESTABLISHMENTS
Provisions re..... 10-33

EUTHANASIA
Animals; field euthanasia..... 14-14

EVIDENCE
Adult entertainment establishments
Rules of evidence inapplicable 10-49
Code
Matters not affected by Code 1-14
Mosquito control
Mosquito larvae as evidence of breeding 34-144
Solid waste
Solid waste and scrap tire management
Evidence of violations 62-40
Taxation
Occupational taxes and regulatory fees
Evidence of
Qualification required if applicable 22-68
State registration when required..... 22-67

EXCAVATIONS
Soil erosion and sedimentation control; generally ..... 34-171 et seq.

F

FALSE REPRESENTATIONS
Buildings, construction and related activities
Permits and inspections
Misrepresentation of application..... 18-73

FEES (Generally)
Adult entertainment establishments
License fee..... 10-58

Section

FEES (Generally) (Cont'd.)
Alcoholic beverages
Beer and wine; license
Fees, proration 6-74
Payment of fees..... 6-69
Animals; fees 14-10
Buildings, construction and related activities
Permits and inspections; prescribed fees 18-74
Stormwater management
Permit procedures and requirements
Review fees..... 18-277
Definitions and rules of construction
Schedule of fees and charges..... 1-4
Occupational taxes and regulatory fees..... 22-61 et seq.
See: TAXATION
Pawnbrokers
License..... 22-53
Roads
Driveway installation policy
Permit fees..... 58-35

FENCES, WALLS, HEDGES AND ENCLOSURES
Comprehensive land development
Other requirements by districts
Buffer and landscape standards for gateway overlay zoning district added 7-6-99, (App. A § 84.9)

FINANCES (Generally)
Appropriations
Code
Matters not affected by Code..... 1-14
Budgets
Fire prevention and protection
Volunteer fire department
Funding, budget 38-32
Civil emergencies
Emergency management
Emergency management agency
Financial assistance..... 26-78
Code
Matters not affected by Code 1-14
Compensation, salaries, etc. See: OFFICERS AND EMPLOYEES
Emergency services
911 emergency answering service
Division of fiscal responsibility..... 30-69
Fire prevention and protection
Volunteer fire department
Funding, budget..... 38-32
Historic preservation
Expenditure of funds; generally 50-3

Section

FINANCES (Generally) (Cont'd.)
Historic preservation commission
Funding 50-40
Purchases 2-142
Taxation; generally ..... 66-31 et seq.
See: TAXATION
Water and sewers; generally..... 74-31 et seq.
See: WATER AND SEWERS

FINES, FORFEITURES AND OTHER PENALTIES
Adult entertainment establishments
Violations; penalty..... 10-52

Section

FINES, FORFEITURES AND OTHER PENALTIES (Cont'd.)
Buildings, construction and related activities
Construction codes
Violations and penalties 18-39
Flow-rate restrictions on plumbing fixtures
Enforcement; penalty for violation of article 18-116
Civil emergencies
Emergency management
Emergency management agency
Penalties 26-76
Code
Effect of repeal or expiration of resolution 1-13
General penalty, continuing violations; authority granted to court 1-19
Matters not affected by Code 1-14
Floods
Flood damage prevention
Penalty for violation of article 42-39
Health and sanitation
State rules, regulations
Penalty for violation 46-33
Historic preservation
Penalty provisions 50-2
Offenses 54-1, 54-2
Roads
Roads and rights-of-way usage
Penalties and incentives 58-68
Soil erosion and sedimentation control
Bond forfeiture 34-179
Monetary penalties 34-180
Solid waste
Solid waste and scrap tire management
Violations and penalties 62-37
Stormwater management
Penalties 18-343

FIRE HYDRANTS
Charges for use 74-68
Use and misuse 74-67

FIRE PREVENTION AND PROTECTION
Emergency services; generally ..... 30-1 et seq.
See: EMERGENCY SERVICES
Volunteer fire department
Districts; personnel 38-34
Established 38-31
Funding, budget 38-32
Immunity of volunteers, benefits 38-33
Rules, regulations 38-35

Section

FLAMMABLES. See: COMBUSTIBLES AND INFLAMMABLES

FLOODS
Flood damage prevention
Abrogation and greater restrictions..... 42-36
Administration
Conditions for variances..... 42-70
Duties and responsibilities of the administrator..... 42-67
Local administrator
Designated..... 42-66
Permit procedures..... 42-68
Variance procedures..... 42-69
Basis for establishing areas of special flood hazard..... 42-33
Compliance with article..... 42-35
Definitions..... 42-31
Establishment of development permit..... 42-34
Findings of fact..... 42-41
Flood hazard reduction, provisions for
Building standards for streams without established base flood elevations and/or floodway..... 42-103
Elevated buildings..... 42-92
Floodway..... 42-102
General standards..... 42-91
Manufactured homes..... 42-94
Manufactured homes and recreational vehicles..... 42-101
New construction and/or substantial improvements..... 42-99
Nonconforming repairs, etc..... 42-98
Nonresidential construction..... 42-100
Sanitary sewage systems..... 42-96
Standards for areas of shallow flooding (AO zones)..... 42-104
Standards for areas of special flood hazard (zones AE) with established base flood elevations without designated floodways..... 42-105
Standards for critical facilities..... 42-107
Standards for subdivisions..... 42-106
Technical, construction equipment..... 42-93
Waste disposal systems..... 42-97
Water supply systems..... 42-95
Interpretation..... 42-37
Lands to which article applies..... 42-32
Objectives..... 42-43
Penalty for violation of article..... 42-39
Statement of purpose..... 42-42
Statutory authorization..... 42-40
Warning and disclaimer of liability..... 42-38
Soil erosion and sedimentation control; generally..... 34-171 et seq.
See: SOIL EROSION AND SEDIMENTATION CONTROL

Section

FLOODS (Cont'd.)
Stormwater management
Post-development stormwater management performance criteria
Extreme flooding protection 18-295
Overbank flooding protection 18-294

FOOD AND FOOD SERVICES
Alcoholic beverages; generally ..... 6-1 et seq.
See: ALCOHOLIC BEVERAGES

FORFEITURES. See: FINES, FORFEITURES AND OTHER PENALTIES

FRANCHISES
Code
Matters not affected by Code 1-14

G

GARBAGE. See: SOLID WASTE

GAS
Comprehensive land development
Required subdivision improvements
Installation of utilities, (App. A § 146.3)
Fire prevention and protection; generally ..... 38-31 et seq.
See: FIRE PREVENTION AND PROTECTION

GENDER (Of Code Words)
Code
Grammatical interpretation ..... 1-9(1)

GEORGIA DEPARTMENT OF TRANSPORTATION
Comprehensive land development
Procedures for subdivision plat approval
Procedure for preliminary plat approval, (App. A § 123.2)

GEORGIA, STATE OF. See: STATE

GIFTS
Emergency services
911 emergency answering service 30-71

GRADES AND GRADING
Code
Matters not affected by Code 1-14
Comprehensive land development
Required subdivision improvements
Additional street design requirements
Grades, horizontal curves, tangents, and sight distances, (App. A § 143.1)
Basic construction requirements for all classes of streets
Grading, (App. A § 144.1)

Section

GRANTS
Emergency services
911 emergency answering service 30-71

GRASSES
Vegetation; generally ..... 34-111 et seq.
See: NUISANCES

GROUNDWATER RECHARGE AREA OVERLAY DISTRICT
Comprehensive land development (Appendix A). See that subject

H

HAWKERS
Noise control 34-44

HD HISTORIC OVERLAY ZONING DISTRICT
Comprehensive land development
Other requirements by districts, (App. A § 83.1, 83.2)

HEALTH AND SANITATION
Adult entertainment establishments; generally ..... 10-31 et seq.
See: ADULT ENTERTAINMENT ESTABLISHMENTS
Animals; generally ..... 14-1 et seq.
See: ANIMALS
Buildings, construction and related activities; generally .... 18-1 et seq.
See: BUILDINGS, CONSTRUCTION AND RELATED ACTIVITIES
Comprehensive land development
Procedures for subdivision plat approval
Final plat specifications
Health department certification, (App. A § 126.6)
Preliminary plat specifications
Approval from the health department, (App. A § 124.5)
Environment ..... 34-31 et seq.
See: ENVIRONMENT
Fire prevention and protection; generally ..... 38-31 et seq.
See: FIRE PREVENTION AND PROTECTION
Floods; generally ..... 42-31 et seq.
See: FLOODS
Minimum health and safety standards for pre-owned manufactured homes ..... 18-376 et seq.
See: BUILDINGS, CONSTRUCTION AND RELATED ACTIVITIES
Mosquito control ..... 34-141 et seq.
See: MOSQUITO CONTROL
Nuisances ..... 34-81 et seq.
See: NUISANCES
Roads; generally ..... 58-31 et seq.
See: ROADS

Section

HEALTH AND SANITATION (Cont'd.)
Solid waste; generally ..... 62-1 et seq.
See: SOLID WASTE
State rules, regulations
Adopted 46-31
Issuance of citation 46-32
Penalty for violation 46-33
Vegetation ..... 34-111 et seq.
See: NUISANCES
Water and sewers; generally ..... 74-31 et seq.
See: WATER AND SEWERS

HEARINGS. See specific subjects as indexed

HEDGES. See: FENCES, WALLS, HEDGES AND ENCLOSURES

HIGHWAYS. See: STREETS, SIDEWALKS AND OTHER PUBLIC PLACES

HISTORIC PRESERVATION
Application for certificates of appropriateness
Acceptable reaction to application 50-115
Acquisition of property 50-125
Appeals 50-126
Approval of alterations or new construction 50-111
Approval of new construction within designated districts. 50-112
Certificate of appropriateness void if construction not commenced 50-123
Deadline for approval or rejection 50-119
Guidelines and criteria 50-113
Interior alteration 50-117
Local or state government actions 50-127
Necessary actions to be taken upon rejection 50-120
Public hearings; notices, and rights to be heard 50-116
Recording of applications 50-124
Requirement of conformance 50-122
Submission of plans 50-114
Technical advice 50-118
Undue hardship 50-121
Comprehensive land development
Procedures for requesting an amendment to the comprehensive land development resolution
Conducting the hearing
Hearings held by the board of commissioners, planning and zoning commission, or historic preservation commission, (App. A § 153)
Conformity with building codes 50-5
Definitions 50-1
Demolition or relocation applications
Actions acceptable in reaction to application for permit... 50-162
Authority to comment on applications 50-161

Section

HISTORIC PRESERVATION (Cont'd.)
Consideration at postdemolition plans 50-164
Consideration of predemolition plans..... 50-163
Demolition generally 50-165
Designation of historic districts and landmarks
Application for designation
Historic district..... 50-76(a)
Landmark structure..... 50-76(b)
Authority to amend or rescind designation 50-85
Designation of historic district
Affirmation of existing zoning..... 50-74(d)
Boundaries ..... 50-74(b)
Criteria ..... 50-74(a)
Evaluation of properties ..... 50-74(c)
Designation of landmark
Boundary description ..... 50-75(b)
Criteria ..... 50-75(a)
Moratorium on applications 50-84
Nominations for action 50-72
Notification of adoption of ordinance for designation 50-82
Notification of historic preservation section 50-80
Notification of other agencies regarding designation 50-83
Notification of property owners of proposed designation .. 50-78
Ordinance for designation announcement..... 50-81
Preliminary research 50-71
Preparation of report on proposed designations..... 50-73
Required public hearings 50-77
Requirements regarding district boundaries..... 50-79
Expenditure of funds..... 50-3
Historic preservation commission
Advisory authority..... 50-35
Appointment..... 50-31
Compensation 50-34
Composition 50-32
Funding 50-40
Meetings 50-38
Planning function..... 50-36
Powers 50-37
Records..... 50-41
Rules of procedure 50-39
Terms..... 50-33
Ordinary repair..... 50-4
Penalty provisions..... 50-2

HISTORY NOTES
Code..... 1-5

HOSPITALS
Noise control 34-43

Section

HOTELS, ETC.
Adult entertainment establishments; generally..... 10-31 et seq.
See: ADULT ENTERTAINMENT ESTABLISHMENTS

HOUSING
Buildings, construction and related activities; generally ... 18-1 et seq.
See: BUILDINGS, CONSTRUCTION AND RELATED ACTIVITIES
Civil emergencies
Overcharging for goods housing during state of emergency; prohibited..... 26-3
Fire prevention and protection; generally ..... 38-31 et seq.
See: FIRE PREVENTION AND PROTECTION
Floods; generally ..... 42-31 et seq.
See: FLOODS

I

IDENTIFICATION
Animals
Identification and inoculation..... 14-7
Comprehensive land development
Required subdivision improvements
Sidewalks and street signs
Location of street identification signs, (App. A § 147.4)
Emergency services
Identification of residences..... 30-32, 30-31

IMPACT FEES
Development impact fee ordinance
Administrative appeals
Eligibility to file..... 52-32(a)
Payment of impact fee during appeal ..... 52-32(c)
Process ..... 52-32(b)
Credits
Application..... 52-28(d)
Granting of..... 52-28(b)
Restrictions ..... 52-28(a)
Valuation, guidelines for ..... 52-28(c)
Deposit and expenditure of fees
Annual report ..... 52-27(b)
Maintenance of funds..... 52-27(a)
Enforcement and penalties
Authority..... 52-33(a)
Violations ..... 52-33(b)
Exemptions
Policy ..... 52-26(a)
Process for approval ..... 52-26(b)
Fee assessment and payment
Fee certification ..... 52-25(d)
Fee schedule ..... 52-25(a)

Section

IMPACT FEES (Cont'd.)
Individual assessment determinations ..... 52-25(c)
Timing of assessment and payment ..... 52-25(b)
Findings, purpose, and intent 52-22
Imposition of development impact fees
Construction not subject to impact fees ..... 52-24(a)
Grandfathered projects ..... 52-24(b)
Method of calculation ..... 52-24(c)
Periodic review and amendments 52-31
Capital improvements element periodic review ..... 52-31(b)
Continuation of validity ..... 52-31(c)
Ordinance amendments ..... 52-31(a)
Private contractual agreements
Authorized ..... 52-30(a)
Procedure ..... 52-30(c)
Provisions ..... 52-30(b)
Refunds
Eligibility ..... 52-29(a)
Filing request for ..... 52-29(c)
Notice of entitlement ..... 52-29(b)
Payment of ..... 52-29(d)
Repealer, severability, and effective date 52-34
Rules of construction and definitions 52-23
Short title, authority, and applicability 52-21

IMPOUNDMENT
Animals; generally ..... 14-1 et seq.
See: ANIMALS

IMPROVEMENTS. See: PUBLIC WORKS AND IMPROVEMENTS

INDECENCY AND OBSCENITY
Adult entertainment establishments; generally ..... 10-31 et seq.
See: ADULT ENTERTAINMENT ESTABLISHMENTS

INDEPENDENT CONTRACTORS
Adult entertainment establishments
Adult entertainment establishment employees ..... 10-39(d)

INDUSTRIAL CONCERNS
Comprehensive land development
Use requirements by district
Wholesale and Industrial Districts ..... 74 et seq.
See: COMPREHENSIVE LAND DEVELOPMENT (Appendix A)
Water and sewers
Illicit discharge and illegal connection
Compliance, access, inspection and notification
Industrial or construction activity discharges 74-170

INFLAMMABLES. See: COMBUSTIBLES AND INFLAMMABLES

Section

INJUNCTIONS. See: WRITS, WARRANTS AND OTHER PROCESSES

INSPECTIONS, INSPECTORS
Adult entertainment establishments
Self-inspection of licensed premises 10-55
Buildings, construction and related activities
Permits and inspections ..... 18-71 et seq.
See: BUILDINGS, CONSTRUCTION AND RELATED ACTIVITIES
Self inspection by plumbers, utility contractors 18-1
Comprehensive land development
Required subdivision improvements
Administrative procedures
Inspections and approval by the board of commissioners, (App. A § 148.2)
Zoning administration
Procedure for application for a conditional use
Application, (App. A § 117.11)
Pawnbrokers
Inspections 22-33
Roads
Driveway installation policy 58-33
Roads and rights-of-way usage
Inspection 58-65
Soil erosion and sedimentation control
Inspection of permitted sites; notice to comply; failure... 34-173
Refusal or obstruction of access to property by inspectors 34-175
Stormwater management. See: BUILDINGS, CONSTRUCTION AND RELATED ACTIVITIES
Construction inspections of post-development stormwater management system
Final inspection and as built plans 18-312
Inspections to ensure plan compliance during construction 18-311
Ongoing inspection and maintenance of stormwater facilities and practices ..... 18-321 et seq.
Permit procedures and requirements
Stormwater management inspection and maintenance agreements 18-274
Water and sewers
Illicit discharge and illegal connection
Compliance, access, inspection and notification..... 74-170 et seq.
Water
Inspection of water mains and lines 74-61

INTERFERENCE (Generally). See: OBSTRUCTIONS

INTERPRETATION
Code
Grammatical interpretation 1-9

Section

INTERPRETATION (Cont'd.)
Interpretation of language 1-8

INTERSECTIONS
Comprehensive land development
General requirements and minimum standards of design for the subdivision of land
Street design requirements
Street intersections, (App. A § 134.1)

INTOXICATION, INTOXICANTS. See: ALCOHOLIC BEVERAGES

INVESTIGATIONS
Adult entertainment establishments
Application; investigation 10-43

J

JONES, COUNTY OF. See: COUNTY

JUDGES
Nuisances
Additional powers of magistrate judge to punish 34-89

JUVENILES. See: MINORS

K

KEEPER
Definitions and rules of construction..... 1-4

L

LAND DISTURBING ACTIVITIES
Comprehensive land development
Other requirements by districts
Buffer and landscape standards for gateway overlay zoning district added 7-6-99
Temporary buffers
Buffer adjacent to land disturbing activities, (App. A § 84.5.1)
Soil erosion and sedimentation control..... 34-171 et seq.
See: SOIL EROSION AND SEDIMENTATION CONTROL

LAND, LANDS
Comprehensive land development
General provisions
Nonconforming lots, nonconforming uses of land, nonconforming structures, and nonconforming uses of structures and premises
Nonconforming uses of land, (App. A § 61.5)

Section

LAND, LANDS (Cont'd.)
Floods
Flood damage prevention
Lands to which article applies 42-32

Section

LANDFILLS
Solid waste
Solid waste and scrap tire management
Regulation of municipal solid waste landfills, inert landfills, construction and demolition landfills and solid waste collection and recycling centers 62-35

LANDMARKS
Historic preservation; generally..... 50-1 et seq.
See: HISTORIC PRESERVATION

LANDSCAPING
Comprehensive land development
Other requirements by districts
Buffer and landscape standards for Gateway Overlay Zoning District added 7-6-99, (App. A § 84)
Design guidelines manual—bypass design overlay district
Design standards
Landscaping guidelines ..... 4D (App. B)
Vegetation; generally ..... 34-111 et seq.
See: NUISANCES

LAWS
Alcoholic beverages
Beer and wine
Compliance with applicable laws 6-38
Board of commissioners
Legislation..... 2-101 et seq.
See: BOARD OF COMMISSIONERS
Comprehensive land development (Appendix A). See that subject
Definitions and rules of construction
Law..... 1-4
Floods
Flood damage prevention
Statutory authorization 42-40
Offenses 54-1, 54-2
Taxation
Board of tax assessors
Compliance with laws, regulations 66-35

LIABILITY
Buildings, construction and related activities
Construction codes 18-36
Code
Liability for violations by corporations and other associations 1-20
Emergency services
911 emergency answering service
Satisfaction of liabilities 30-73

Section

LIABILITY (Cont'd.)
Floods
Flood damage prevention
Warning and disclaimer of liability 42-38
Soil erosion and sedimentation control 34-183
Water and sewers
Water
Termination of service
Liability for cutoff failures 74-59
Liability of customer 74-60

LICENSES AND PERMITS
Adult entertainment establishments ..... 10-35 et seq.
See: ADULT ENTERTAINMENT ESTABLISHMENTS
Alcoholic beverages
Beer and wine
License ..... 6-61 et seq.
See: ALCOHOLIC BEVERAGES
Buildings, construction and related activities
Permits and inspections ..... 18-71 et seq.
See: BUILDINGS, CONSTRUCTION AND RELATED ACTIVITIES
Comprehensive land development (Appendix A). See that subject
Floods
Flood damage prevention
Administration; permit procedures 42-68
Establishment of development permit 42-34
Historic preservation
Demolition or relocation applications
Actions acceptable in reaction to application for permit 50-162
Pawnbrokers
License ..... 22-51 et seq.
See: PAWNBROKERS
Roads
Driveway installation policy
Permit fees 58-35
Permit required 58-31
Roads ..... 58-31 et seq.
See: ROADS
Soil erosion and sedimentation control
Failure to obtain a permit for land disturbing activity ... 34-177
Permit procedures ..... 34-201 et seq.
See: SOIL EROSION AND SEDIMENTATION CONTROL
Stormwater management
Permit procedures and requirements ..... 18-271 et seq.
See: BUILDINGS, CONSTRUCTION AND RELATED ACTIVITIES

Section

LICENSES AND PERMITS (Cont'd.)
Taxation; generally ..... 66-31 et seq.
See: TAXATION

LIGHTS AND LIGHTING
Comprehensive land development

Section

LIGHTS AND LIGHTING (Cont'd.)
General provisions
Screening and lighting, (App. A § 67)

LIQUOR. See: ALCOHOLIC BEVERAGES

LITTER. See: SOLID WASTE

LOCATION
Adult entertainment establishments
Change of location or name 10-47
Code
Matters not affected by Code 1-14
Comprehensive land development
General provisions
Off-street loading and unloading spaces
Location of off-street loading spaces, (App. A § 63.5)
Required subdivision improvements
Sidewalks and street signs
Location of sidewalks, (App. A § 147.1)
Location of street identification signs, (App. A § 147.4)
Special provisions
Automobile service stations, (App. A § 96.1)
Emergency services
Identification of residences
Location of display 30-32
Historic preservation
Demolition or relocation applications ..... 50-161 et seq.
See: HISTORIC PRESERVATION
Taxation
Occupational taxes and regulatory fees
Transfer of occupation tax certificate to a new location. 22-74

LOGGING, CHIPPING AND PULPWOOD
Roads
Roads and rights-of-way usage
Logging, chipping and pulpwood specifics 58-69

LOITERING
Offenses 54-2

LOTS
Comprehensive land development (Appendix A). See that subject
Vegetation; generally ..... 34-111 et seq.
See: NUISANCES

M

M-1 WHOLESALE AND LIGHT INDUSTRIAL DISTRICT
Comprehensive land development (Appendix A). See that subject

Section

M-2 GENERAL INDUSTRIAL DISTRICT
Comprehensive land development (Appendix A). See that subject

MAILBOX REGULATIONS
Generally 54-3

MANUFACTURED HOMES
Comprehensive land development (Appendix A). See that subject
Floods
Flood damage prevention
Flood hazard reduction, provisions for
Generally 42-94
Manufactured homes and recreational vehicles, standards for 42-101

MAPS. See: SURVEYS, MAPS AND PLATS

MAY
Definitions and rules of construction 1-4

MEETINGS. See specific subjects as indexed

METERS
Water and sewers ..... 74-40 et seq.
See:WATER AND SEWERS

MINORS
Adult entertainment establishments
Admission of minors unlawful 10-37
Sales to minors unlawful 10-38
Alcoholic beverages
Beer and wine
Posting of notice to minors 6-32
Sale to minors 6-31

MOBILE HOMES. See: MANUFACTURED HOMES

MONTH
Definitions and rules of construction 1-4

MONUMENTS
Comprehensive land development
Required subdivision improvements, (App. A § 141)

MOSQUITO CONTROL
Failure to remedy conditions after notice 34-145
Keeping water in which mosquitoes may breed 34-142
Mosquito larvae as evidence of breeding 34-144
Nuisance declared 34-141
Right of entry of health officer 34-146
Treatment of collections of water 34-143

MOTOR VEHICLES. See: TRAFFIC AND VEHICLES

Section

MUST
Definitions and rules of construction 1-4

N

NAMES AND NAMING
Adult entertainment establishments
Change of location or name 10-47
Code
Adoption of Code; name 1-1
Matters not affected by Code 1-14
Comprehensive land development
General requirements and minimum standards of design for the subdivision of land
General design requirements
Name of subdivision, (App. A § 131.2)
General requirements for streets and other rights-of-way
Street names, (App. A § 132.3)
Definitions and rules of construction
Names of officers, and departments 1-4

NINE-ONE-ONE (911). See: EMERGENCY SERVICES

NOISE CONTROL
Blowers 34-48
Construction or repairing of buildings 34-42
Defect in vehicle or load 34-40
Enumeration 34-32
Exemptions 34-51
Exhausts 34-39
General prohibition 34-31
Hawkers; peddlers; vendors 34-44
Horns; signaling devices 34-33
Injunctions 34-52
Loading; unloading; opening boxes 34-41
Loudspeakers; amplifiers; other devices for production or reproduction of sound for advertising 34-35
Noises to attract attention 34-45
Piledrivers, hammers, other such appliances 34-47
Radios, phonographs, other machines or devices that produce or reduce sound 34-34
Schools; courts; churches; hospitals 34-43
Sound trucks 34-49
Steam whistle 34-38
Transportation of metal rails, pillars or columns 34-46
Vehicle repair in residential areas 34-50
Yelling; shouting; hooting; whistling; singing 34-36

NONCONFORMANCE
Comprehensive land development (Appendix A). See that subject

Section

NONCONFORMANCE (Cont'd.)
Floods
Flood damage prevention
Flood hazard reduction, provisions for
Nonconforming repairs, etc. 42-98
Historic preservation
Application for certificates of appropriateness
Requirement of conformance 50-122
Conformity with building codes 50-5

NONTECHNICAL AND TECHNICAL WORDS
Definitions and rules of construction 1-4

NOTICES. See specific subjects as indexed

NUDITY
Adult entertainment establishments; generally ..... 10-31 et seq.
See: ADULT ENTERTAINMENT ESTABLISHMENTS

NUISANCES
Additional powers of magistrate judge to punish 34-89
Adult entertainment establishments
Abatement as sanitary nuisance 10-57
Unlawful operation declared nuisance 10-53
Defined 34-81
Enumeration 34-82
Issuance of summons for abatement 34-84
Maintaining or permitting nuisance prohibited 34-83
Mosquito control ..... 34-141 et seq.
See: MOSQUITO CONTROL
Noise control; generally ..... 34-31 et seq.
See: NOISE CONTROL
Nuisances constituting imminent danger 34-87
Order for abatement 34-85
Service of notice on nonresidents and others regarding nuisances 34-88
Solid waste ..... 62-1 et seq.
See: SOLID WASTE
Special provisions for old, unused, stripped, junked automobiles 34-86
Vegetation ..... 34-111 et seq.
See: VEGETATION

NUMBERS AND NUMBERING
Comprehensive land development
Required subdivision improvements
Special classification of streets for construction
Private roads
Number of Lots permitted, (App. A § 142.41)

O

OATH, AFFIRMATION, SWEAR OR SWORN

Section

OATH, AFFIRMATION, SWEAR OR SWORN (Cont'd.)
Definitions and rules of construction
Oath 1-4

OBSCENITY. See: INDECENCY AND OBSCENITY

OBSTRUCTIONS
Animals
Obstruction of an officer 14-8
Comprehensive land development
General provisions
Control of curb cuts and vision clearance, (App. A § 64)
Soil erosion and sedimentation control
Refusal or obstruction of access to property by inspectors 34-175

O.C.G.A.
Definitions and rules of construction 1-4

OCMULGEE RIVER CORRIDOR PROTECTION OVERLAY DISTRICT
Comprehensive land development

Section

OCMULGEE RIVER CORRIDOR PROTECTION OVERLAY DISTRICT (Cont'd.)
Other requirements by districts
Water Resource Protection Overlay Districts 4th draft
River Corridor Protection Overlay District ..... 85.72 et seq.
See: COMPREHENSIVE LAND DEVELOPMENT (Appendix A)

OFFENSES
(Note—And Miscellaneous Provisions)
Code
Causing, permitting, abetting or concealing prohibited act 1-11
Effect of repeal or expiration of resolution..... 1-13
Matters not affected by Code..... 1-14
Disorderly conduct 54-1
Loitering or prowling 54-2
Mailbox regulations 54-3
Noise control; generally..... 34-31 et seq.
See: NOISE CONTROL
Nuisances; generally ..... 34-81 et seq.
See: NUISANCES
Public parks, recreation facilities, and cemeteries; hours of operation 54-4

OFFICERS AND EMPLOYEES
Adult entertainment establishments
Hearing officer
Action by board of commissioners 10-51
Report 10-50
Powers of hearing officer..... 10-48
Animals
Jones County Animal Control Officers 14-12
Obstruction of an officer 14-8
Board of commissioners..... 2-31 et seq.
See: BOARD OF COMMISSIONERS
Civil emergencies
Emergency management..... 26-31 et seq.
See: civil emergencies
Code
Matters not affected by Code..... 1-14
References to titles of officers, employees, public bodies .. 1-7
Compensation, salaries, etc.
Code
Matters not affected by Code 1-14
Historic preservation
Historic preservation commission
Compensation 50-34
Comprehensive land development
Zoning administration..... 111 et seq.
See: COMPREHENSIVE LAND DEVELOPMENT (Appendix A)

Section

OFFICERS AND EMPLOYEES (Cont'd.)
Definitions and rules of construction
Delegation of authority 1-4
Joint authority 1-4
Names of officers, and departments 1-4
Sheriff 1-4
Emergency services
911 emergency answering service
Agreement administrator 30-76
Fire prevention and protection
Volunteer fire department ..... 38-31 et seq.
See: FIRE PREVENTION AND PROTECTION
Floods
Flood damage prevention
Administration ..... 42-66 et seq.
See: FLOODS
Historic preservation
Historic preservation commission ..... 50-31 et seq.
Mosquito control
Right of entry of health officer 34-146
Nuisances
Additional powers of magistrate judge to punish 34-89
Personnel provisions not affected by Code 2-141
Salaries. See herein: Compensation, Salaries, Etc.
Soil erosion and sedimentation control
Right of zoning director to enter upon public or private property 34-174
Taxation
Board of tax assessors ..... 66-31 et seq.

OPEN SPACES. See: YARDS AND OTHER OPEN SPACES

OR
Definitions and rules of construction
Or, and 1-4

ORDINANCES, RESOLUTIONS, ETC.
Adopting ordinance, (page xi)
Code
Incorporation of resolutions, etc. 1-2
Definitions and rules of construction
Penal resolutions, ordinances 1-4
Taxation
Occupational taxes and regulatory fees
Prior ordinance 22-76

OWNER
Definitions and rules of construction 1-4

P

PARENTAL CONCERNS

Section

PARENTAL CONCERNS (Cont'd.)
Traffic and vehicles
Parental responsibility 70-2

PARKING. See: TRAFFIC AND VEHICLES

PARKS AND RECREATION
Animals; generally ..... 14-1 et seq.
See: ANIMALS
Comprehensive land development
Special provisions; nonstructural uses
Campgrounds, (App. A § 98.3)
Fire prevention and protection; generally ..... 38-31 et seq.
See: FIRE PREVENTION AND PROTECTION
Historic preservation; generally ..... 50-1 et seq.
See: HISTORIC PRESERVATION
Noise control; generally..... 34-31 et seq.
See: NOISE CONTROL
Offenses
Public parks, recreation facilities, and cemeteries; hours of operation..... 54-4
Traffic and vehicles; generally ..... 70-1 et seq.
See: TRAFFIC AND VEHICLES

PARLIAMENTARIAN
Board of commissioners
Parliamentary procedure..... 2-72

PAVING, PAVEMENT
Code
Matters not affected by Code 1-14
Comprehensive land development
Required subdivision improvements
Roadway surfacing and paving, (App. A § 145)

PAWNBROKERS
Daily report 22-32
Definitions 22-31
Inspections 22-33
License
Applicability of article..... 22-52
Duration, renewal..... 22-54
Fee..... 22-53
Required 22-51
Revocation 22-56
Transfer..... 22-55

PEDDLERS, CANVASSERS AND SOLICITORS
Noise control
Hawkers; peddlers; vendors 34-44

PENAL RESOLUTIONS. See: ORDINANCES, RESOLUTIONS, ETC.

Section

PENALTIES. See: FINES, FORFEITURES AND OTHER PENALTIES

PERMITS. See: LICENSES AND PERMITS

PERSON. See also: BUSINESSES
Definitions and rules of construction..... 1-4

PERSONAL PROPERTY
Definitions and rules of construction..... 1-4
Property, generally. See: PROPERTY

PERSONNEL. See: OFFICERS AND EMPLOYEES

PLANNED UNIT DEVELOPMENT DISTRICT
Comprehensive land development
Exceptions and modifications
Planned unit developments, (App. A § 101.2)

PLANNED UNIT DEVELOPMENTS
Comprehensive land development (Appendix A). See that subject

PLANNING AND DEVELOPMENT
Buildings, construction and related activities; generally .... 18-1 et seq.
See: BUILDINGS, CONSTRUCTION AND RELATED ACTIVITIES
Civil emergencies
Emergency management
Emergency management agency
Local emergency management agency plan..... 26-80
Comprehensive land development (Appendix A). See that subject
Floods; generally ..... 42-31 et seq.
See: FLOODS
Historic preservation
Demolition or relocation applications
Consideration at postdemolition plans..... 50-164
Consideration of predemolition plans 50-163
Historic preservation commission
Planning function 50-36
Roads; generally ..... 58-31 et seq.
See: ROADS
Soil erosion and sedimentation control; generally ..... 34-171 et seq.
See: SOIL EROSION AND SEDIMENTATION CONTROL
Solid waste
Solid waste management plan..... 62-1

PLATS. See: SURVEYS, MAPS AND PLATS

Section

PLUMBING
Buildings, construction and related activities
Flow-rate restrictions on plumbing fixtures ..... 18-111 et seq.
See: BUILDINGS, CONSTRUCTION AND RELATED ACTIVITIES
Self inspection by plumbers, utility contractors 18-1

POLICE DEPARTMENT
Offenses 54-1, 54-2
Traffic and vehicles; generally ..... 70-1 et seq.
See: TRAFFIC AND VEHICLES

POLITICAL CONCERNS
Civil emergencies
Emergency management
Emergency management agency
Immunity of state and political subdivisions 26-79

POSTING. See also: DISPLAYS
Alcoholic beverages
Beer and wine
Posting of notice to minors 6-32

PRECEDING
Definitions and rules of construction..... 1-4

PREMISES
Definitions and rules of construction..... 1-4

PRINTING
Comprehensive land development
Procedures for requesting an amendment to the comprehensive land development resolution
Printing and distributing this article, (App. A § 156)

PRIVATE PROPERTY
Comprehensive land development
Required subdivision improvements
Special classification of streets for construction
Private roads ..... 142.41 et seq.
See: COMPREHENSIVE LAND DEVELOPMENT (Appendix A)
Property, generally. See: PROPERTY
Soil erosion and sedimentation control
Right of zoning director to enter upon public or private property 34-174

PROCEEDINGS. See: SUITS, ACTIONS AND OTHER PROCEEDINGS

PROCESSES. See: WRITS, WARRANTS AND OTHER PROCESSES

Section

PROPERTY
Animals; generally ..... 14-1 et seq.
See: ANIMALS
Buildings, construction and related activities; generally .... 18-1 et seq.
See: BUILDINGS, CONSTRUCTION AND RELATED ACTIVITIES
Comprehensive land development (Appendix A). See that subject
Definitions and rules of construction..... 1-4
Historic preservation; generally ..... 50-1 et seq.
See: HISTORIC PRESERVATION
Mosquito control..... 34-141 et seq.
See: MOSQUITO CONTROL
Noise control; generally..... 34-31 et seq.
See: NOISE CONTROL
Nuisances; generally ..... 34-81 et seq.
See: NUISANCES
Roads; generally ..... 58-31 et seq.
See: ROADS
Solid waste; generally..... 62-1 et seq.
See: SOLID WASTE
Traffic and vehicles; generally ..... 70-1 et seq.
See: TRAFFIC AND VEHICLES
Vegetation; generally..... 34-111 et seq.
See: NUISANCES
Water and sewers; generally ..... 74-31 et seq.
See: WATER AND SEWERS

PROWLING
Offenses 54-2

PUBLIC HEARINGS. See specific subjects as indexed

PUBLIC PLACES. See: STREETS, SIDEWALKS AND OTHER PUBLIC PLACES

PUBLIC PROPERTY (Generally). See: PROPERTY

PUBLIC WORKS AND IMPROVEMENTS
Code
Matters not affected by Code 1-14
Comprehensive land development (Appendix A). See that subject

Section

PUBLIC WORKS AND IMPROVEMENTS (Cont'd.)
Floods
Flood damage prevention
Flood hazard reduction, provisions for
New construction and/or substantial improvements .. 42-99

PULPWOODING. See: LOGGING, CHIPPING AND PULPWOODING

R

R- DISTRICTS
Comprehensive land development (Appendix A). See that subject

R-1-R SINGLE-FAMILY RURAL RESIDENTIAL DISTRICT
Comprehensive land development (Appendix A). See that subject

RAILROADS AND TRAINS
Comprehensive land development
General requirements and minimum standards of design for the subdivision of land
General requirements for streets and other rights-of-way
Development along major street, limited-access highway or railroad right-of-way, (App. A § 132.6)

REAL PROPERTY
Definitions and rules of construction..... 1-4
Property, generally. See: PROPERTY

RECORDS AND REPORTS
Administration
Records retention 2-1
Adult entertainment establishments
Hearing officer; report..... 10-50
Animals; records..... 14-23
Board of commissioners
Minutes 2-45
Visual and sound recordings..... 2-51
Buildings, construction and related activities
Construction codes; records..... 18-35
Comprehensive land development
Procedures for subdivision plat approval
Recording of final plat, (App. A § 128)
Historic preservation
Application for certificates of appropriateness
Recording of applications 50-124
Designation of historic districts and landmarks
Preparation of report on proposed designations 50-73
Historic preservation commission; records 50-41

Section

RECORDS AND REPORTS (Cont'd.)
Pawnbrokers
Daily report..... 22-32

RECREATION. See: PARKS AND RECREATION

RECREATIONAL VEHICLES
Floods
Flood damage prevention
Flood hazard reduction, provisions for
Manufactured homes and recreational vehicles, standards for 42-101
Traffic and vehicles. See that subject

RECYCLING
Solid waste
Solid waste and scrap tire management
Recycling 62-42
Regulation of municipal solid waste landfills, inert landfills, construction and demolition landfills and solid waste collection and recycling centers 62-35

REFERENCES
Code
Catchlines of sections; history notes and references 1-5
References to titles of officers, employees, public bodies .. 1-7

REFUSE. See: SOLID WASTE

RELOCATION. See: LOCATION

REPORTS. See: RECORDS AND REPORTS

RESIDENCE, RESIDENCY
Definitions and rules of construction
Residence 1-4

RESIDENTIAL DISTRICTS
Comprehensive land development (Appendix A). See that subject

RESOLUTIONS. See: ORDINANCES, RESOLUTIONS, ETC.

RIGHT OF ENTRY. See: ENTRY

RIGHTS (Generally)
Code
Matters not affected by Code 1-14
Historic preservation
Application for certificates of appropriateness
Public hearings; notices, and rights to be heard..... 50-116
Soil erosion and sedimentation control
Right of zoning director to enter upon public or private property 34-174

Section

RIGHTS-OF-WAY
Comprehensive land development
General requirements and minimum standards of design for the subdivision of land
General requirements for streets and other rights-of-way ..... 132.1 et seq.
See: COMPREHENSIVE LAND DEVELOPMENT (Appendix A)
Roads
Driveway installation policy
County's right-of-way, installation of culverts on 58-36
Roads and rights-of-way usage ..... 58-61 et seq.
See: ROADS

RIVER CORRIDOR PROTECTION OVERLAY DISTRICT
Comprehensive land development (Appendix A). See that subject

R-MH MANUFACTURED HOME RESIDENTIAL DISTRICT
Comprehensive land development (Appendix A). See that subject

ROADS. See also: STREETS, SIDEWALKS AND OTHER PUBLIC PLACES
Comprehensive land development
Required subdivision improvements
Basic construction requirements for all classes of streets
Road permit, (App. A § 144.7)
Road striping, (App. A § 144.6)
Roadway surfacing and paving, (App. A § 145)
Driveway installation policy
Design criteria for driveways 58-32
Exemptions 58-37
Inspection 58-33
Installation of culverts on the county's right-of-way 58-36
Minimum dimensions 58-34
Permit
Fees 58-35
Required 58-31
Licenses and permits
Driveway installation policy
Permit fees 58-35
Permit required 58-31
Permits. See herein: Licenses and Permits
Roads and rights-of-way usage
Definitions 58-62
Inspection 58-65
Logging, chipping and pulpwood specifics 58-69
Notification required 58-63
Penalties and incentives 58-68
Scope 58-61

Section

ROADS (Cont'd.)
Surety bond 58-66
Suspension of operations 58-67

RUBBISH. See: SOLID WASTE

S

SALARIES
Compensation, salaries, etc. See: OFFICERS AND EMPLOYEES

SALES
Adult entertainment establishments; generally..... 10-31 et seq.
See: ADULT ENTERTAINMENT ESTABLISHMENTS
Alcoholic beverages; generally..... 6-1 et seq.
See: ALCOHOLIC BEVERAGES
Pawnbrokers; generally ..... 22-31 et seq.
See: PAWNBROKERS

SANITATION. See: HEALTH AND SANITATION

SCHEDULES
Definitions and rules of construction
Schedule of fees and charges..... 1-4

SCHOOLS
Noise control..... 34-43

SEAL
Definitions and rules of construction..... 1-4

SEWERS. See: WATER AND SEWERS

SHALL
Definitions and rules of construction..... 1-4

SHERIFF
Definitions and rules of construction..... 1-4

SHRUBBERY
Vegetation; generally ..... 34-111 et seq.
See: NUISANCES

SIDEWALKS. See: STREETS, SIDEWALKS AND OTHER PUBLIC PLACES

SIGNALS
Noise control
Horns; signaling devices..... 34-33

SIGNATURE
Definitions and rules of construction..... 1-4

Section

SIGNS
Comprehensive land development (Appendix A). See that subject
Traffic and vehicles
Operation of vehicles
Traffic, speed, etc., zones; signs and traffic control devices 70-33

SOIL EROSION AND SEDIMENTATION CONTROL
Administrative remedies 34-181
Bond forfeiture 34-179
Definitions 34-171
Exemptions 34-172
Failure to obtain a permit for land disturbing activity 34-177
Floods; generally ..... 42-31 et seq.
See: FLOODS
Inspection of permitted sites; notice to comply; failure 34-173
Judicial review 34-182
Liability 34-183
Minimum requirements
Adoption of requirements exceeding division standards 34-234
Best management practices 34-232
Conservation and engineering practices 34-233
Effectivity 34-235
Validity 34-235
Monetary penalties 34-180
Permit procedures
Application requirements 34-202
Approval of plan prior to issuance 34-205
Education; certification 34-210
Injury by permit holder to property of another 34-209
Issuance, denial of permits 34-204
Phased development; separate permits 34-206
Plan requirements
Certification of plans; contents ..... 34-203(c)
Data required ..... 34-203(b)
Generally ..... 34-203(a)
Maintenance of control practices ..... 34-203(d)
Review of ordinances regulating land development by applicant 34-201
Suspension, revocation, rejection or modification 34-207
Refusal or obstruction of access to property by inspectors 34-175
Requirement to amend 34-185
Review of issuing authority's actions; deadline for corrective action 34-176
Right of zoning director to enter upon public or private property 34-174
Stop work orders 34-178
Title 34-184

Section

SOLICITORS. See: PEDDLERS, CANVASSERS AND SOLICITORS

SOLID WASTE
Comprehensive land development
Required subdivision improvements
Installation of utilities
Sewer, (App. A § 146.2)
Floods
Flood damage prevention
Flood hazard reduction, provisions for
Waste disposal systems 42-97
Solid waste and scrap tire management
Accumulation 62-36
Civil remedies and abatement of nuisance 62-39
Definitions 62-31
Enforcement 62-38
Evidence of violations 62-40
Recycling 62-42
Regulation of all solid waste or litter containers and receptacles 62-34
Regulation of municipal solid waste landfills, inert landfills, construction and demolition landfills and solid waste collection and recycling centers 62-35
Transporting solid waste and litter 62-33
Violations and penalties 62-37
Waste disposal; general 62-32
Yard trimmings 62-41
Solid waste management plan 62-1
Water and sewers; generally ..... 74-31 et seq.
See: WATER AND SEWERS

SPEED
Traffic and vehicles
Operation of vehicles
General speed limit 70-31
Maximum speed limits on specific streets 70-32
Traffic, speed, etc., zones; signs and traffic control devices 70-33, 70-34

STATE
Civil emergencies
Emergency management
Emergency management agency
Immunity of state and political subdivisions 26-79
Comprehensive land development
Procedures for subdivision plat approval
Procedure for preliminary plat approval
Georgia Department of Transportation recommendations, (App. A § 123.2)
Definitions and rules of construction 1-4

Section

STATE (Cont'd.)
Health and sanitation
State rules, regulations ..... 46-31 et seq.
See: HEALTH AND SANITATION
Taxation
Occupational taxes and regulatory fees
Evidence of state registration when required 22-67

STORAGE
Comprehensive land development
General provisions
Storage and parking of trailers and vehicles, (App. A § 66)
Special provisions
Automobile service stations
Storage of inflammable products, (App. A § 96.6)

STORMWATER
Comprehensive land development
Required subdivision improvements
Basic construction requirements for all classes of streets
Storm drainage, (App. A § 144.2)
Floods
Flood damage prevention
Flood hazard reduction, provisions for
Sanitary sewage systems 42-96
Stormwater management..... 18-251 et seq.
See: BUILDINGS, CONSTRUCTION AND RELATED ACTIVITIES

STREAMS. See: BOATS, DOCKS AND WATERWAYS

STREETS, SIDEWALKS AND OTHER PUBLIC PLACES
Animals; generally ..... 14-1 et seq.
See: ANIMALS
Buildings, construction and related activities; generally .... 18-1 et seq.
See: BUILDINGS, CONSTRUCTION AND RELATED ACTIVITIES
Code
Matters not affected by Code 1-14
Comprehensive land development (Appendix A). See that subject
Definitions and rules of construction
Public place..... 1-4
Road..... 1-4
Floods; generally ..... 42-31 et seq.
See: FLOODS
Noise control; generally..... 34-31 et seq.
See: NOISE CONTROL
Nuisances; generally ..... 34-81 et seq.
See: NUISANCES

Section

STREETS, SIDEWALKS AND OTHER PUBLIC PLACES (Cont'd.)
Roads ..... 58-31 et seq.
See: ROADS
Sidewalks
Comprehensive land development
Required subdivision improvements
Sidewalks and street signs, (App. A § 147)
Definitions and rules of construction 1-4
Solid waste; generally..... 62-1 et seq.
See: SOLID WASTE
Traffic and vehicles; generally ..... 70-1 et seq.
See: TRAFFIC AND VEHICLES
Water and sewers; generally ..... 74-31 et seq.
See: WATER AND SEWERS

SUBDIVISIONS
Buildings, construction and related activities; generally .... 18-1 et seq.
See: BUILDINGS, CONSTRUCTION AND RELATED ACTIVITIES
Code
Matters not affected by Code 1-14
Comprehensive land development (Appendix A). See that subject
Floods..... 42-31 et seq.
See: FLOODS
Roads; generally ..... 58-31 et seq.
See: ROADS

SUITS, ACTIONS AND OTHER PROCEEDINGS
Code
Effect of repeal or expiration of resolution..... 1-13

SUMMONS. See: WRITS, WARRANTS AND OTHER PROCESSES

SURETY BOND. See: BONDS

SURVEYS, MAPS AND PLATS
Code
Matters not affected by Code 1-14
Comprehensive land development (Appendix A). See that subject

SWEAR OR SWORN. See: OATH, AFFIRMATION, SWEAR OR SWORN

T

TABLES
Comprehensive land development
Other requirements by districts
Minimum lot area, lot width, and maximum lot coverage

Section

TABLES (Cont'd.)
Table of requirements by district and use, (App. A § 81.1)

TAMPERING. See: DAMAGE, INJURY, ETC.

TAXATION
Board of tax assessors
Compliance with laws, regulations 66-35
Composition, appointment 66-31
Qualifications 66-32
Terms 66-33
Vacancies 66-34
Businesses
Financial institutions. See herein that subject
Insurers. See herein that subject
Code
Matters not affected by Code 1-14
Financial institutions
Definitions 66-61
Minimum tax 66-63
Returns 66-64
Tax levied 66-62
When taxes due and payable 66-65
Insurers
Definitions 66-91
Gross premiums tax 66-92
Occupational taxes and regulatory fees
Administrative fee 22-62
Confidentiality 22-70
Date due; penalty 22-71
Definitions 22-61
Effective date 22-77
Enforcement; violations 22-72
Evidence of
Qualification required if applicable 22-68
State registration when required 22-67
Exemptions 22-66
Filing returns; other information required or requested .. 22-69
Occupation tax
Certificate 22-64
Levied; limitations 22-63
Prior ordinance 22-76
Public hearing 22-75
Transfer of occupation tax certificate to a new
Location 22-74
Owner 22-73
Tax lien forclosure 66-1

TEENAGERS. See: MINORS

Section

TENANT
Definitions and rules of construction..... 1-4

TENSE (Of Code Words)
Code
Grammatical interpretation ..... 1-9(3)

THEFT
Animals
Escape, injury, or theft 14-22
Water
Theft of water services 74-73

TIME (Defined)
Definitions and rules of construction
Time, computation of..... 1-4

TOWERS
Comprehensive land development
Special provisions; nonstructural uses
Communication towers, (App. A § 98.5)

TRAFFIC AND VEHICLES
Adoption of uniform rules of the road..... 70-1
Comprehensive land development (Appendix A). See that subject
Noise control; generally..... 34-31 et seq.
See: NOISE CONTROL
Nuisances
Special provisions for old, unused, stripped, junked automobiles 34-86
Operation of vehicles
Covering of loads..... 70-35
General speed limit..... 70-31
Maximum speed limits on specific streets..... 70-32
Off-road vehicles 70-37
Parking in deceleration or acceleration lanes prohibited.. 70-36
Speed detection devices 70-34
Traffic, speed, etc., zones; signs and traffic control devices 70-33
Parental responsibility..... 70-2
Parking
Comprehensive land development
General provisions
Off-street automobile parking, (App. A § 62)
Storage and parking of trailers and vehicles, (App. A § 66)
Off-street loading and unloading spaces, (App. A § 63)
Solid waste
Solid waste and scrap tire management ..... 62-31 et seq.
See: SOLID WASTE
Transporting solid waste and litter..... 62-33
Temporary traffic regulations 70-3

Section

TRAINS. See: RAILROADS AND TRAINS

TRASH. See: SOLID WASTE

TREES
Vegetation; generally ..... 34-111 et seq.
See: NUISANCES

U

UNDERAGED PERSONS. See: MINORS

UTILITIES. See also: WATER AND SEWERS
Buildings, construction and related activities
Self inspection by plumbers, utility contractors 18-1
Comprehensive land development
Required subdivision improvements
Installation of utilities ..... 144.3 et seq.
See: COMPREHENSIVE LAND DEVELOPMENT (Appendix A)
Roadway surfacing and paving
Pavement breaks for utility connections, (App. A § 145.4)
Floods; generally ..... 42-31 et seq.
See: FLOODS
Roads; generally ..... 58-31 et seq.
See: ROADS
Soil erosion and sedimentation control; generally ..... 34-171 et seq.
See: SOIL EROSION AND SEDIMENTATION CONTROL
Solid waste; generally ..... 62-1 et seq.
See: SOLID WASTE

V

VANDALISM
Water
Water and sewers
Tampering with meter 74-55

VARIANCES
Comprehensive land development (Appendix A). See that subject
Floods
Flood damage prevention
Administration
Conditions for variances 42-70
Variance procedures 42-69

VEGETATION
Abatement by county; notice of abatement 34-114
Award of contracts for clearing of lots by county 34-116
Certain weeds, grasses and plants declared a nuisance; exemptions 34-111

Section

VEGETATION (Cont'd.)
Comprehensive land development (Appendix A). See that subject
Height permitted 34-112
Notice to abate 34-113
Remedies 34-115
Soil erosion and sedimentation control; generally ..... 34-171 et seq.
See: SOIL EROSION AND SEDIMENTATION CONTROL
Solid waste
Solid waste and scrap tire management
Yard trimmings 62-41

VEHICLES FOR HIRE
Traffic and vehicles; generally ..... 70-1 et seq.
See: TRAFFIC AND VEHICLES

VEHICLES. See: TRAFFIC AND VEHICLES

VENDORS
Noise control 34-44

VICE CHAIRMAN
Board of commissioners 2-32

VOLUNTEERS
Civil emergencies
Emergency management
Emergency management agency 26-75
Fire prevention and protection
Volunteer fire department ..... 38-31 et seq.
See: FIRE PREVENTION AND PROTECTION

VOTES AND VOTING
Board of commissioners
Parliamentary procedure
Subsidiary motions
Vote immediately (previous question) ..... 2-77(6)
Voting; procedure 2-75
Voting; majority 2-41

W

WALLS. See: FENCES, WALLS, HEDGES AND ENCLOSURES

WARRANTS. See: WRITS, WARRANTS AND OTHER PROCESSES

WASTE MANAGEMENT
Comprehensive land development
Required subdivision improvements
Installation of utilities
Sewer, (App. A § 146.2)
Control and removal of animal wastes 14-6

Section

WASTE MANAGEMENT (Cont'd.)
Floods
Flood damage prevention
Flood hazard reduction, provisions for
Waste disposal systems 42-97
Solid waste; generally ..... 62-1 et seq.
See: SOLID WASTE
Water and sewers; generally ..... 74-31 et seq.
See: WATER AND SEWERS

WATER AND SEWERS. See also: UTILITIES
Comprehensive land development (Appendix A). See that subject
Illicit discharge and illegal connection
Applicability 74-151
Compatibility with other regulations 74-152
Compliance, access, inspection and notification
Access and inspection of properties and facilities 74-171
Industrial or construction activity discharges 74-170
Notification of accidental discharges and spills 74-172
Definitions 74-160
Prohibitions
Illegal connections 74-162
Illicit discharges 74-161
Purpose and intent 74-150
Responsibility for administration 74-154
Severability 74-153
Violations, enforcement and penalties
Appeal of notice of violation 74-182
Civil penalties 74-185
Costs of abatement of the violation 74-184
Criminal penalties 74-186
Enforcement measures after appeal 74-183
Notice of violation 74-181
Remedies not exclusive 74-188
Violations 74-180
Deemed a public nuisance 74-187
Meters
Sewers
Authority to read meters 74-132
Water
Automated 74-75
Bypassing meter 74-41
Inoperative 74-48
Number of meters 74-40
Obstructing or damaging meters or devices 74-46
Reading; monthly bill 74-47
Tampering with meter 74-55
Sewers
Agreement for service 74-131

Section

WATER AND SEWERS (Cont'd.)
Authority to read meters 74-132
Eminent domain 74-133
Water
Extensions
Materials
Sewers ..... 74-95(2)
Stormwater management ..... 18-251 et seq.
See: BUILDINGS, CONSTRUCTION AND RELATED ACTIVITIES
Water
Bypassing meter 74-41
Connections
Connection making 74-44
Connection to a sewage system 74-62.1
Connection to system without authority 74-43
Curb stop or cutoff valve requirements 74-42
Customer's service line—Installation, maintenance, etc . 74-45
Definitions 74-31
Establishment of service
Application 74-34
Changes in ownership, tenancy or service 74-35
Generally 74-33
Fire hydrants
Charges for use 74-68
Use and misuse 74-67
Grease recovery systems
Discharge of grease trap contents prohibited 74-72
Special consideration 74-71
Illegally turning on water after cut-off for nonpayment.. 74-56
Leaks in water and sewer mains service lines 74-62
Liability
Customer 74-60
Cutoff failures 74-59
Monthly bill
Complaints; adjustments 74-50
Failure to receive bill 74-51
Generally 74-49
Nonpayment of bills 74-53
Payments 74-52
Shut-off for nonpayment 74-54
Permanent easement restrictions 74-76
Rates
Authority to fix water rates 74-69
Deposits for water service 74-70
Water rate cost adjustments 74-74
Scope; enforcing officer 74-32
Service taps
Application 74-36
Authority; meter and backflow installation 74-37

Section

WATER AND SEWERS (Cont'd.)
Charges for meters and backflow preventers..... 74-38
Fixtures and equipment..... 74-39
Number of meters..... 74-40
Termination of service
At water system discretion 74-57
By customer request..... 74-58
Liability for cutoff failures..... 74-59
Liability of customer..... 74-60
Tampering with meter 74-55
Theft of water services..... 74-73
Water mains and lines
Authority to prohibit waste of water
Generally 74-63
Turning off water for violation..... 74-64
Damages 74-66
Leaks in water and sewer mains service lines 74-62
Turning off water for emergency or necessity..... 74-65
Water meters
Automated 74-75
Bypassing meter 74-41
Inoperative..... 74-48
Obstructing or damaging meters or devices 74-46
Reading; monthly bill..... 74-47
Tampering with meter..... 74-55

WATER RESOURCE PROTECTION OVERLAY DISTRICTS 4TH DRAFT
Comprehensive land development
Other requirements by districts ..... 85 et seq.
See: COMPREHENSIVE LAND DEVELOPMENT (Appendix A)

WATER SUPPLY WATERSHED PROTECTION OVERLAY DISTRICT
Comprehensive land development (Appendix A). See that subject

WATERWAYS. See: BOATS, DOCKS AND WATERWAYS

WEEDS
Vegetation; generally ..... 34-111 et seq.
See: NUISANCES

WEEK
Definitions and rules of construction..... 1-4

WETLANDS PROTECTION OVERLAY DISTRICT
Comprehensive land development (Appendix A). See that subject

WINE. See: ALCOHOLIC BEVERAGES

Section

WORDS, NONTECHNICAL AND TECHNICAL WORDS. See: NONTECHNICAL AND TECHNICAL WORDS

WRITS, WARRANTS AND OTHER PROCESSES
Noise control
Injunctions 34-52
Nuisances
Issuance of summons for abatement 34-84

WRITTEN
Definitions and rules of construction 1-4

Y

YARDS AND OTHER OPEN SPACES
Comprehensive land development (Appendix A). See that subject

YEAR
Definitions and rules of construction 1-4

YOUNG PERSONS. See: MINORS

Z

ZONES
Floods
Flood damage prevention
Flood hazard reduction, provisions for
Standards for areas of shallow flooding (AO zones).. 42-104
Traffic and vehicles
Operation of vehicles
Traffic, speed, etc., zones; signs and traffic control devices 70-33

ZONING (Generally)
Adult entertainment establishments; generally..... 10-31 et seq.
See: ADULT ENTERTAINMENT ESTABLISHMENTS
Animals; generally ..... 14-1 et seq.
See: ANIMALS
Buildings, construction and related activities; generally ... 18-1 et seq.
See: BUILDINGS, CONSTRUCTION AND RELATED ACTIVITIES
Code
Matters not affected by Code 1-14
Comprehensive land development (Appendix A). See that subject
Floods; generally ..... 42-31 et seq.
See: FLOODS
Historic preservation ..... 50-1 et seq.
See: HISTORIC PRESERVATION
Roads; generally..... 58-31 et seq.
See: ROADS

Section

ZONING (Generally) (Cont'd.)
Soil erosion and sedimentation control
Right of zoning director to enter upon public or private property 34-174
Traffic and vehicles; generally ..... 70-1 et seq.
See: TRAFFIC AND VEHICLES